AquaSense® AV™ Closet ZEMS Series

Automatic Systems Sensor-Operated AquaVantage Flushometer

Installation, Operation, Maintenance, and Parts Manual

Patented and Patents Pending



Sensor-Operated Concealed Systems
ZEMS6140AV
ZEMS6142AV
ZEMS6152AV



ZEMS6000AV

ADA





ZEMS6142AV

ADA

Sensor-Operated Exposed Systems
ZEMS6000AV
ZEMS6000AV-2
ZEMS6000AV-3

LIMITED WARRANTY

All goods sold hereunder are warranted to be free from defects in material and factory workmanship for a period of three years from the date of purchase. Decorative finishes warranted for one year. We will replace at no cost goods that prove defective provided we are notified in writing of such defect and the goods are returned to us prepaid at Sanford, NC, with evidence that they have been properly maintained and used in accordance with instructions. We shall not be responsible for any labor charges or any loss, injury or damages whatsoever, including incidental or consequential damages. The sole and exclusive remedy shall be limited to the replacement of the defective goods. Before installation and use, the purchaser shall determine the suitability of the product for his intended use and the purchaser assumes all risk and liability whatever in connection therewith. Where permitted by law, the implied warranty of merchantability is expressly excluded. If the products sold hereunder are "consumer products," the implied warranty of merchantability is limited to a period of three years and shall be limited solely to the replacement of the defective goods. All weights stated in our catalogs and lists are approximate and are not guaranteed.

PRIOR TO INSTALLATION

Prior to installing the Zurn Automatic Sensor-equipped Flushometer, install the items listed below as illustrated in Figures 1 through 4.

- 2-gang electrical box (4 x 4 x 21⁄8 use Steel City #52171-N box and #52-C-18 device cover or equivalent for sensor); see paragraph entitled “Sensor Location.”
- Single-gang electrical outlet for plug-in power converter.
- Electrical wiring to the power converter outlet (120 VAC, 35 watts service required for each power converter used).
- Closet fixture.
- Zurn carrier system, Z1200 series or equal.
- Single-gang box for Low Battery Indicator Light (optional).

IMPORTANT:

- All electrical wiring is to be installed in accordance with National/Local codes and regulations.
- All plumbing is to be installed in accordance with applicable codes and regulations.
- Water supply lines must be sized to provide an adequate volume of water for each fixture.
- Flush all water lines prior to making connections.
- Sensor units should not be located across from each other or in close proximity to highly reflective surfaces.

The Zurn AquaVantage is designed to operate over the entire pressure range recommended by plumbing fixture manufacturers and will produce a metered flush when activated.

Protect the chrome or special finish of this AquaVantage. ***Do not use toothed tools to install or service the valve.*** Also, see “Care and Cleaning” section of this manual.

SENSOR LOCATION (Figures 1 and 2)

Models ZEMS6000, ZEMS6140, ZEMS6142 and ZEMS6152

Locate the 2-gang electrical box on the centerline of the Flushometer and 21" above the top of the closet fixture (use Steel City #52171-N box and #52-C-18 device cover or equivalent).

Models ZEMS6000-2 and ZEMS6000-3

Locate the centerline of the 2-gang electrical box 3-1/4" to the left of the centerline of the Flushometer and 15" (Model ZEMS6000-2) or 17" (Model ZEMS6000-3) above the top of the closet fixture. (Use Steel City #52171-N box and #52-C-18 device cover or equivalent).

All Models

NOTE: Install plaster ring so screw holes are on left and right side of box. Trim tiles to allow screw holes in plaster ring to show.

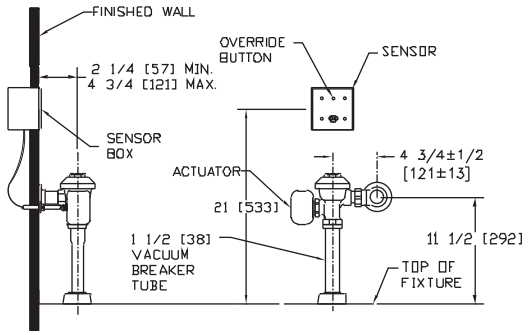

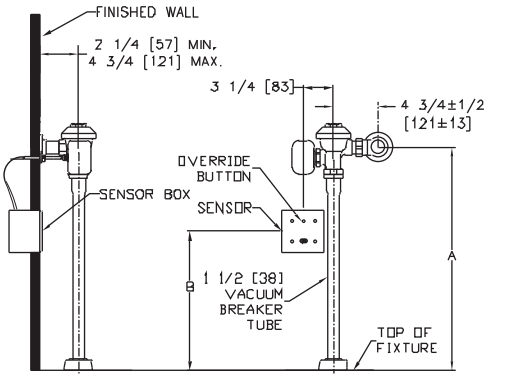

MODEL	A	B
ZEMS–6000–2	24 [610]	15 [381]
ZEMS–6000–3	27 [686]	17 [432]

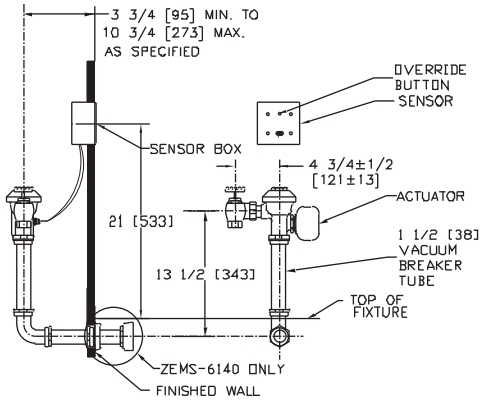

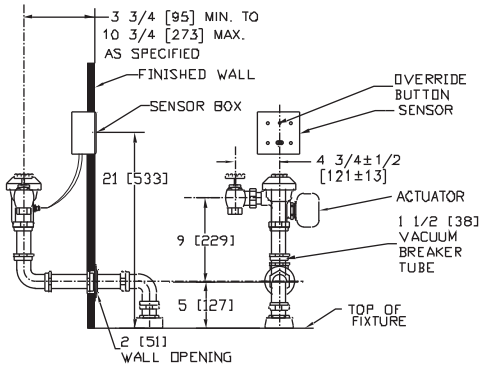

Figure 1

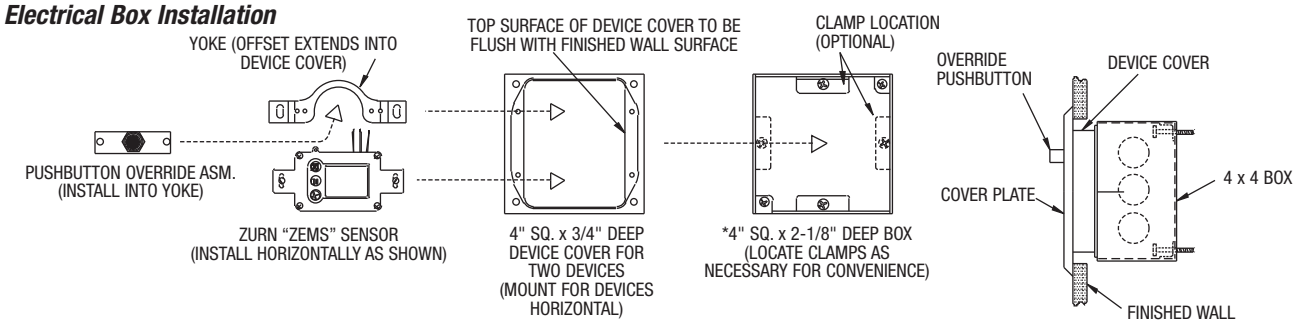

Figure 2

OPTIONAL BATTERY BACKUP and LOW BATTERY INDICATOR LOCATION (Figure 3)

All Models

Install the single-gang electrical box in an area that is convenient for visibility of the Low Battery Indicator Light. This can be located either close to the fixture or in a remote area such as the maintenance area or engineering room.

- The battery backup will supply power to a maximum of eight flush valves for an approximate three-day period during a power failure.
- The Low Battery indicator will come on when the batteries have reached a "caution level." The Flushometers will function when the light is illuminated until the batteries are completely discharged.
- The Low Battery light will illuminate even if the main power has not failed but the batteries have dropped to the "caution level."

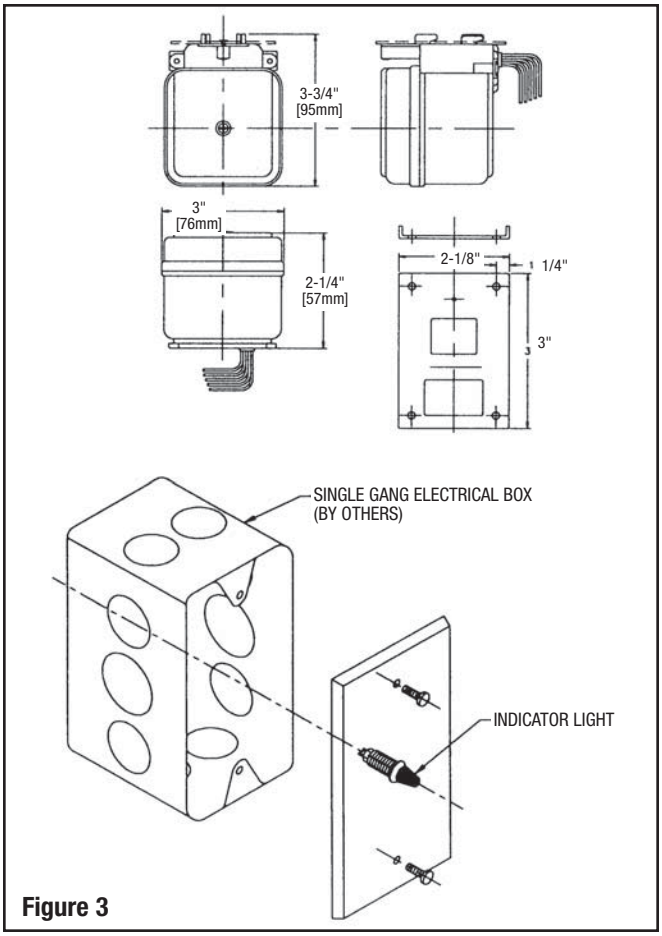

Figure 3

INSTALLATION

STEP 1 – Install Receptacle (Figure 4)

Install Receptacle for the Zurn Power Converter in a convenient location. An optional mini junction box (P6000-MJ) is recommended to distribute power to each sensor location. It is also recommended that brown wire be used for the positive (+) of the supply and blue wire be used for the negative (-) of the supply. This matches the sensor and actuator wire colors.

NOTE: One Zurn Power Converter can operate as many as eight Automatic Sensor equipped Flushometers. The Power Converter is supplied with a six-foot cord. If additional wire is needed from the Power Converter to the Flushometer(s), use #18 AWG for this (by others). ***Do not supply power*** to the Power Converter until installation of actuator, sensor and Flushometer is completed and checked. ***Proper polarity must be observed or damage to one or all components will result.***

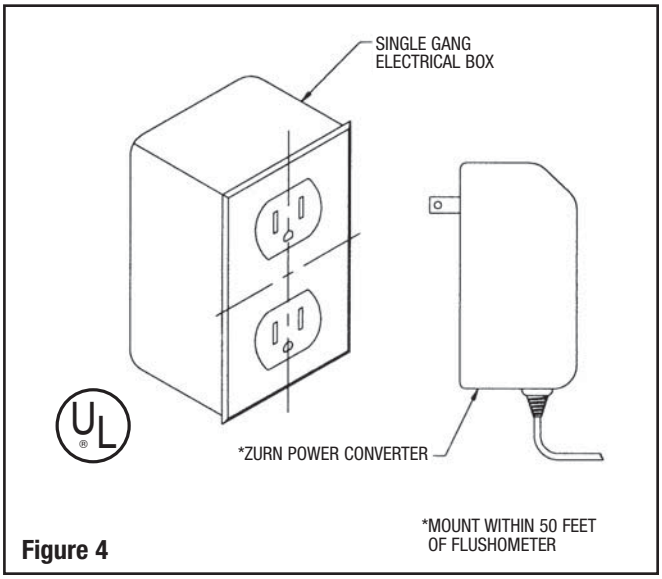

Figure 4

STEP 2 – Optional Battery Backup and Low Battery Indicator Light Installation

- If the battery backup option is being utilized, it is necessary to install the battery pack mounting plate and the battery pack close to the power converter in a convenient location for battery replacement when needed.
- Mount the battery pack mounting bracket.
- Clip the battery pack into location and secure the battery pack to the bracket with the securing screw.

NOTE: **Do not install** the batteries until the Flushometers are completely installed and operating. The batteries do not have to be installed for the system to function.

STEP 3 – Control Stop Installation (Figure 6)
Install the Zurn control stop valve with "Siphon Gard" back check protection (and wall escutcheon on exposed Flushometer installations) to the water supply line with the outlet positioned as required.

NOTE: For sweat solder applications, see recommended instructions included in the Zurn sweat solder kit.

STEP 4 – Install Vacuum Breaker Flush Connection
Models ZEMS6000, ZEMS6000-2 and ZEMS6000-3 (Figure 7)
Slide the tube nut, slip washer, rubber gasket and spud escutcheon over the vacuum breaker tube and insert tube into fixture spud. Hand tighten spud coupling into fixture spud.

Models ZEMS6140, ZEMS6142 and ZEMS6152 (Figure 8)
NOTE: When cutting scoriated pipe, leave a minimum of 1-1/4" of scoriation to ensure engagement with compression coupling.

Assemble pipe, elbows, couplings, slip washers, rubber gaskets and flanges as illustrated in Figure 8. Hand tighten all couplings. Once installation is completed, tighten all connections.

STEP 5 – Actuator Cable Installation (Figures 9 and 10)

1. Drill 1-3/4" diameter hole per Figure 9.
2. Run "fish tape" from electrical box to 1-3/4" hole.
3. Install actuator escutcheon to the actuator pipe with setscrew toward actuator. Do not tighten setscrew at this time.
4. Pull actuator cable through hole with fish tape and back to electrical box. Secure armored cable to box with box clamp.
5. With escutcheon loose and handle port washer installed, push cable into wall. The actuator must be angled away from the valve body at this time until the actuator push rod clears the handle port flange. The actuator can now be mounted to the flush valve and tightened.
6. Push escutcheon back to wall and tighten setscrew.
7. The actuator back cover has vent holes top and bottom. After assembly, the top hole should be sealed with a small dab of clear silicone sealant.

NOTE: See Figure 10 for typical installation including optional mini junction box.

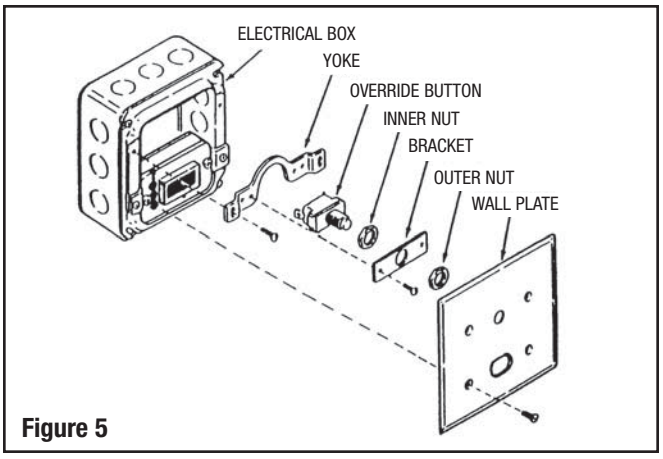

Figure 5

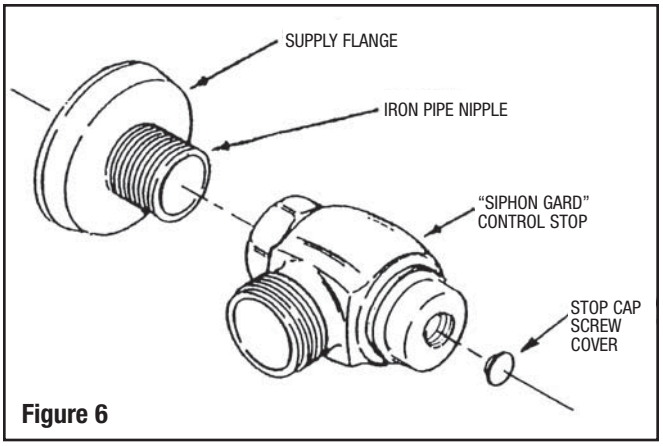

Figure 6

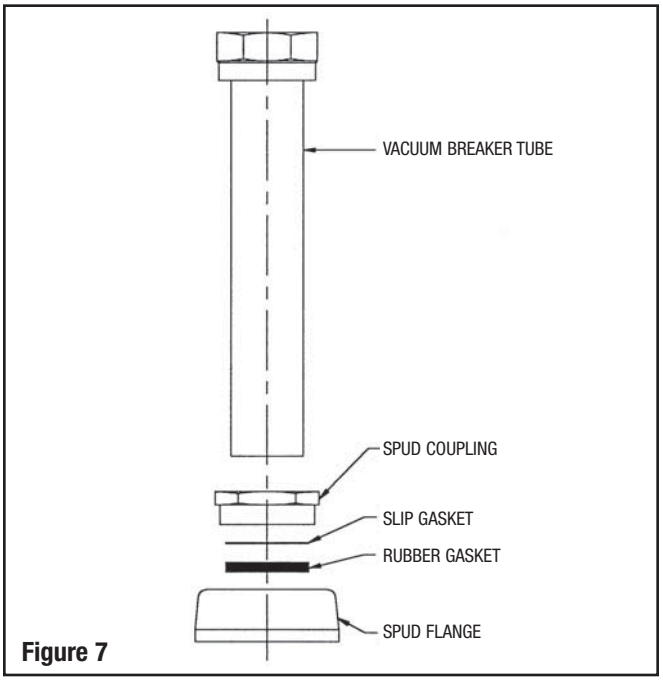

Figure 7

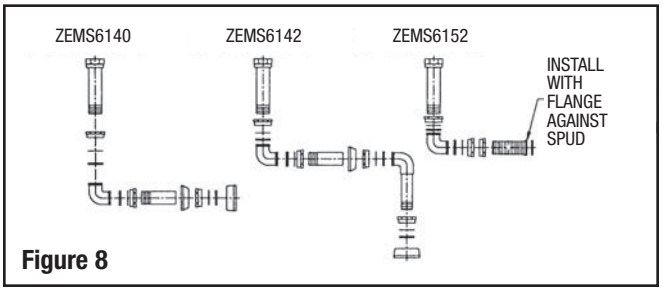

Figure 8

STEP 6 – Electrical Hook-up (Figures 11A and 11B)
Be certain power is off to prevent damage to electrical components. Connect the sensor to the actuator and power converter exactly as shown in Figure 11A, Figure 11B if battery backup is being used. Also, the wiring diagram on the battery backup may be used. ***Double check that power converter polarity is correct.***

STEP 7 – Mount Automatic Sensor (Figure 2)
Install the Zurn Automatic Sensor into the 2-gang electrical box using two (2) long screws provided. Ensure that wires from sensor case point up. The rubber push caps will be on the left side of the sensor. The sensor lens faces outward from the finished wall.

STEP 8 – Mount Yoke and Override Button (Figure 5)
Install inner nut, bracket and outer nut on threaded shaft of override button. Mount bracket to yoke. Adjust the distance so that the override button will protrude through the wall plate using the nuts on each side of bracket. The threaded shaft end of the override button should be flush with wall plate. Connect the override button as per Figure 11A or 11B. Mount the assembled yoke to the electrical box.

STEP 9 – Flush Out Supply Line (Figure 12)
Make sure the control stop is closed by activating the handle. Remove valve body cover. Lift out the trip mechanism. Install the internal plastic cover and valve body cover wrench tight and open control stop. Turn on water supply to flush line of any debris or sediment.

After completion, shut off control stop, remove covers and reinstall the trip. Install internal plastic cover and valve body cover, wrench tight.

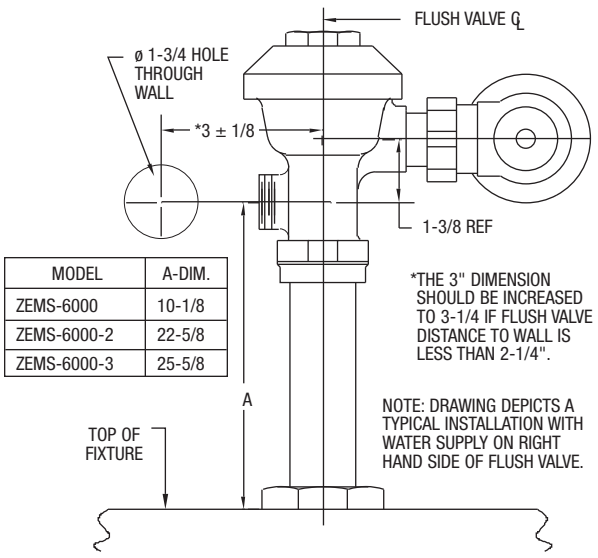

Figure 9 (Exposed Systems)

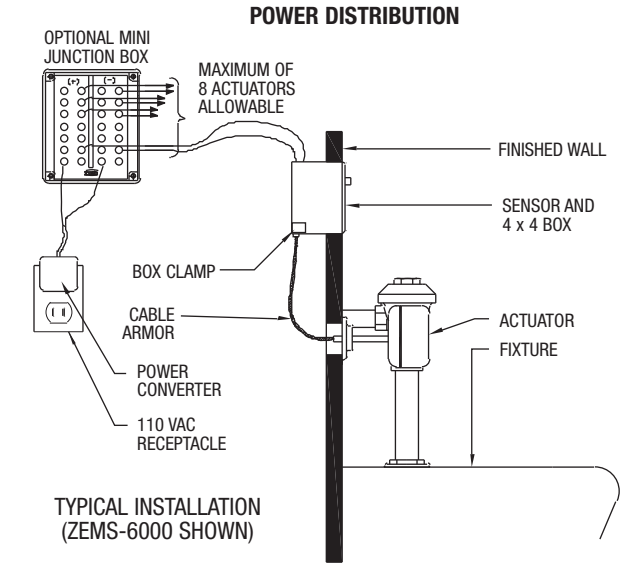

Figure 10

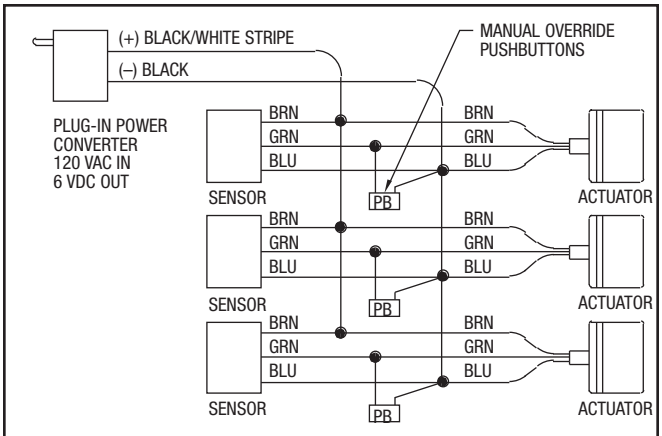

NOTES:
1. FAILURE TO OBSERVE PROPER POLARITY WILL RESULT IN FAILURE OF THE SENSOR AND/OR POWER CONVERTER.
2. USE #18 AWG FOR INTERCONNECTIONS.

Figure 11A (Without Battery Backup)

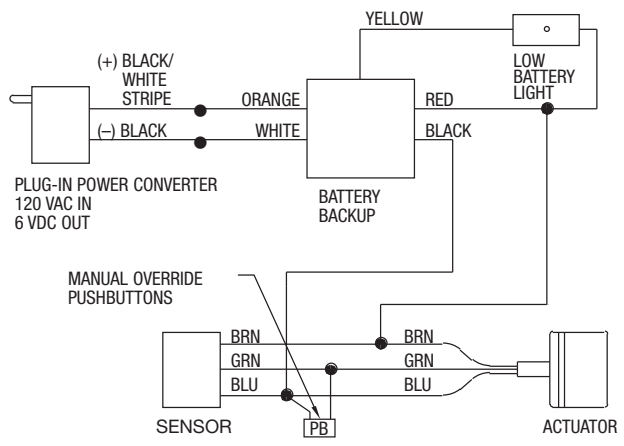

SEE FIGURE 11A FOR WIRING OF MULTIPLE ACTUATORS

Figure 11B (With Battery Backup)

STEP 10 – Test and Adjustment (Figure 13)
(Also see "Sensor Features" on Page 7.)
Zurn Automatic Sensors are preset at the factory and provide the user with selectable options as follows:

Switch 1 – Automatic Flush (Factory setting is on.)

Switch 2 – Red/Green LED (Factory setting is on.)

Switch 3 – Courtesy Flush (Factory setting is on.)

- **Red/Green LED –** With power applied the red light will illuminate when an object is detected. The green light will illuminate after the object has been detected for a minimum of 8 seconds then leaves. The green light indicates the flushing sequence.
- **Range Adjustments –** The Zurn Automatic Sensors are factory set to operate at a range of 50". This range should be satisfactory for most installations. If the range is too short (i.e., not detecting the user) or too long, adjust the range.
- **To Make A Range Adjustment –** Remove the rubber push caps. The range adjustment is shown in Figure 13. Using a small screwdriver, turn the range adjustment clockwise to increase range (maximum range is 60") or counterclockwise to decrease range (minmum range is 12").

CAUTION: Range adjustment rotates only 1/2 turn total from min. to max. Do not exceed this or sensor will be damaged.

Stand in front of the Zurn Automatic Sensor at the desired distance; the red light will illuminate when you are within range.

Repeat adjustment procedure until the desired range is obtained.

- **Switch Settings** (Figure 13)
  The three switches control the following options. They can be activated or deactivated by means of the switches (down is on, up is off).

  Switch 1 – Automatic Flush – The unit will automatically flush 24 hours after last user.

  Switch 2 – Red/Green LED – When an object is detected the Red LED illuminates. The Green LED illuminates while flushing.

  Switch 3 – Courtesy Flush – When an object has been detected for two seconds, the unit flushes and goes into the normal mode. This is repeatable after 90 seconds.

  NOTE: After the options have been selected the reset button ***must*** be pushed for sensor to accept selections. Make sure rubber push caps are securely installed after making adjustments to protect sensor from moisture.

STEP 11 – Adjust Control Stop (Figures 6 and 12)
Adjust the control stop to meet the flow rate required for proper cleaning of the fixture. Open control stop counterclockwise one-half turn from closed position. Activate Flushometer simulating a user. Adjust the control stop after each flush until the rate of flow delivered properly cleanses the fixture.

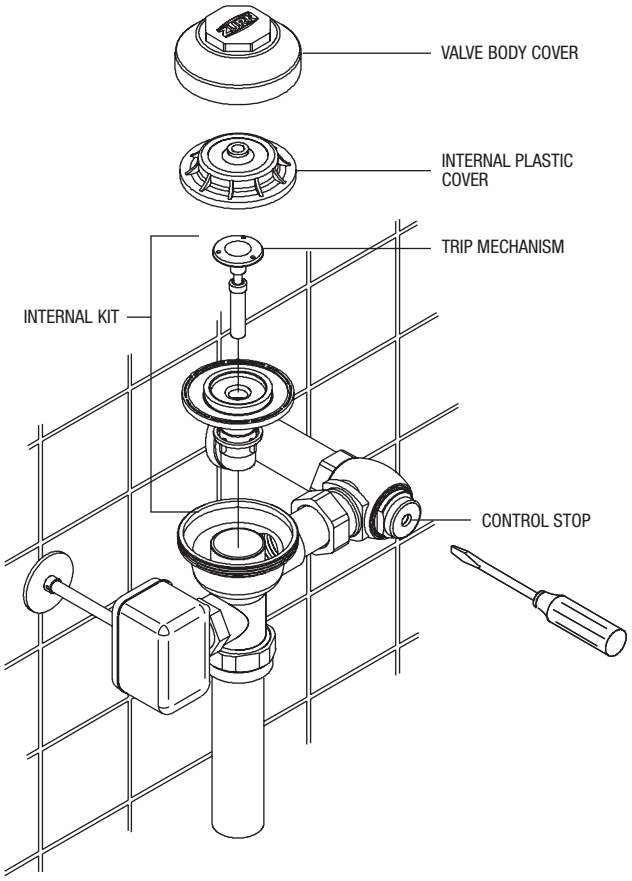

Figure 12

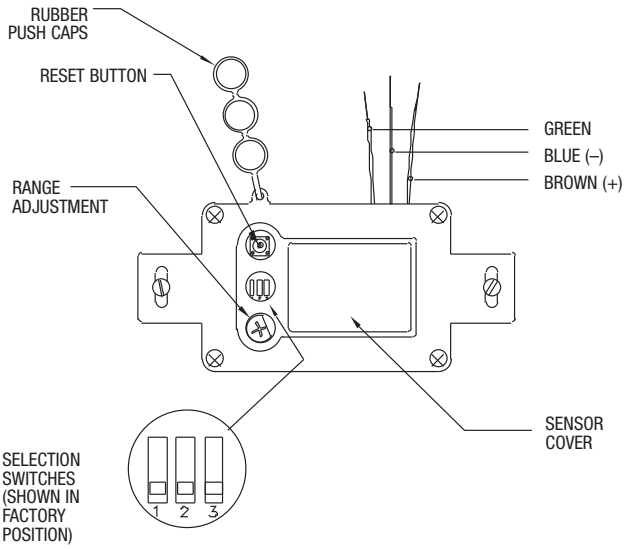

Figure 13

IMPORTANT NOTE: Excessive water flow creates noise, while too little flow will not satisfy the needs of the fixture. Proper adjustment is made when:

1. The plumbing fixture is cleansed after each flush without splashing water out from the lip.
2. A quiet flushing cycle is achieved.

After adjustment: Replace the Zurn stop cap screw cover.

CARE AND CLEANING INSTRUCTIONS

Do not use abrasive or chemical cleaners to clean Flushometers and actuators as they may dull the luster and attack the chrome or special decorative finishes. Use only mild soap and water, then wipe dry with a clean cloth or towel.

While cleaning the bathroom tile, the Flushometer and actuator should be protected from splattering of cleaner. Acids and cleaning fluids can discolor or remove chrome plating.

SENSOR FEATURES (See Step 10 for instructions.)

Courtesy Flush: The Sensor will provide a courtesy flush two seconds after a person is first detected. The courtesy flush removes any residue from the fixture. The main flush will occur when the user steps away from the fixture. The courtesy flush can be manually activated/deactivated at any time.

Automatic 24-Hour Flush: The sensor will provide an automatic flush 24 hours after the last user. The automatic flush can be manually activated/deactivated at any time.

Indicator Lights: The sensor unit has two operation lights, red and green. The red light is lit when an object is detected. The green is lit when the unit is flushing. The indicator lights can be manually activated/deactivated at any time.

Maintenance Override (For Maintenance Purposes):
The sensor may be disabled for 10 minutes by placing a magnet on the sensor lens for 3 to 5 seconds. After 10 minutes the sensor will automatically resume functioning. Placing a magnet on the sensor for one second will restore normal operation and also provide a flush. These features are often desired for cleaning purposes.

Adjustable Range: The viewing distance is adjustable from 12" to 60".

Function Light: If an object is in the viewing range for more than 30 minutes the red LED will blink. Range readjustment may be required.

TROUBLE SHOOTING

PROBLEM	CAUSE	SOLUTION
No water comes from the flush valve.	The water supply line or the angle stop is shut off.	Open the water supply or the angle stop.
	The electric wire(s) is not connected.	Connect the wires.
	The surface of the infrared cover is stained.	Clean the surface of the sensor cover.
	There is a reflective surface in front of the sensor.	Remove the reflective surface from in front of the sensor.
	The detection range is not adjusted properly.	Adjust the detection range.
	The infrared sensor or the actuator is out of order.	Contact distributor for replacement.
Water does not stop flowing.	The by-pass hole in the diaphragm is clogged.	Clean the by-pass hole in the diaphragm.
	The sealing area of the diaphragm is dirty.	Clean the sealing area of the diaphragm.

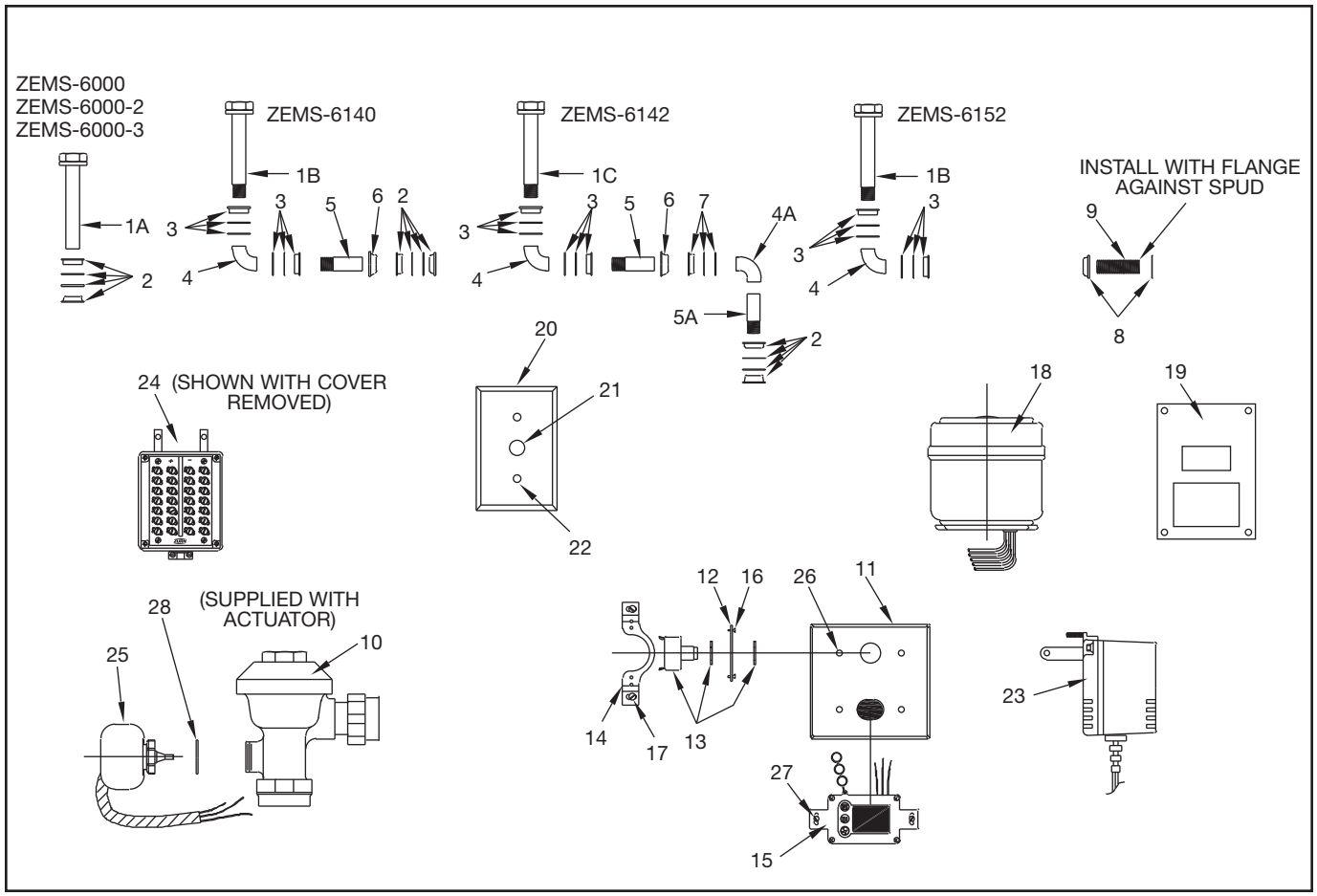

Item	Part No.	Description
1A	P6000-A-AA-CP	1½" x 9" Vacuum Breaker Assembly CP (Model ZEMS-6000)
	P6000-2-A-AA-CP	1½" x 21" Vacuum Breaker Assembly CP (Model ZEMS-6000-2)
	P6000-3-A-AA-CP	1½" x 24" Vacuum Breaker Assembly CP (Model ZEMS-6000-3)
1B	P6000-1-A-AA-RB	1½" x 11½" Vacuum Breaker Assembly RB (Model ZEMS-6140 and ZEMS-6152)
1C	P6000-A-AA-RB	1½" x 6" Vacuum Breaker Assembly RB (Model ZEMS-6142)
2	P6000-H	1½" Spud Coupling Assembly CP
3	P6000-HN-RB	1½" Slip Joint Coupling (set of two)
4	P6000-QE3-RB	1½" Double Slip Elbow RB
4A	P6000-QE3-CP	1½" Double Slip Elbow CP
5	P6000-QE1-("L")-CP	1½" Outlet Tube CP (specify 'L' dim.)
5A	P6000-QT1-4-CP	1½" x 4" Outlet Tube CP
6	P6000-G-TUBE	Flange
7	P6000-HN-CP	1½" Slip Joint Coupling CP
8	P6000-QT4	1½" Coupling S-30 Gasket
9	P6000-QT3-("L")-RB	1½" Outlet Tube RB (specify 'L' dim.)
10	Specify Series	Valve Body CP (specify valve type)

Item	Part No.	Description
11	PESS6000-22	Sensor Cover Plate
12	PESS6000-23	Bracket
13	PESS6000-24	Push Button
14	PESS6000-25	Yoke
15	PEMS6000-26	Sensor
16	PESS6000-27	Bracket Screws (set of two)
17	PESS6000-28	Yoke Screws (set of two)
18	PESS6000-29	Battery Back-Up (optional)
19	PESS6000-30	Wall Bracket (optional)
20	PESS6000-31	Indicator Light Cover Plate (optional)
21	PESS6000-32	Indicator Light (optional)
22	PH6000-HY35	Screws (two required) (optional)
23	P6000-PC6	Power Converter
24	P6000-MJ	Mini Junction Box (optional)
25	PEMS6000-HYM	ZEMS Actuator
26	PH6000-HY35	Screws (four required)
27	PH6000-HY35	Screws (two required)
28	P6000-M10	Washer (supplied with Item 25)

ZURN INDUSTRIES, LLC *COMMERCIAL BRASS OPERATION, 5900 ELWIN BUCHANAN DRIVE, SANFORD, NC, U.S.A. 27330*
PHONE: 1-800-997-3876 FAX: 919/775-3541 www.zurn.com

ZURN INDUSTRIES LIMITED *3544 NASHUA DRIVE, MISSISSAUGA, ONTARIO L4V 1L2 PHONE: 905/405-8272 FAX: 905/405-1292*

© 2011 Zurn Industries, LLC

Printed in the U.S.A.

Form No. FV38-WCS, Rev. 2/11