MOP SINKS

# RECOMMENDED CLEANING & MAINTENANCE PROCEDURES FOR TERRAZZO-WARE MOP SINKS

1. Finish Recommendation
Mop sinks are finished prior to shipment, if further sealing is required, use Spartan Cote Cement Sealer or Equivalent.

2. Regular Cleaning
To maintain the original terrazzo appearance, clean regularly with a liquid detergent such as Joy, Liquid Ajax or Spic and Span (for the latter, prepare a solution containing 1/2 cup of Spic and Span in a gallon of water). Scrub with a stiff bristled, non-metallic scrub brush and then rinse thoroughly.

NOTE: Do not use any acid, e.g., muriatic or cleaning agents that contain acid.

3. Special or Unusual Conditions

*a. Scum on surface caused by soap, make-up, etc:*
Use a cleaning powder, such as Ajax, plus lots of elbow grease.

*b. Surface cleaning:*
Heel marks, plaster, etc. may require abrasive removal. This can be done with a wet emery cloth. If emery cloth is ineffective, use an 80 to 100 grit aluminum oxide coated paper. Abrasive cloth or paper will result in a very faint grinding away of the base surface.

*c. Penetrated stains:*
Stains such as caused by oil, putty, etc., may be removed by scouring with a cleanser and then soaking stained surface overnight—if need be—with a commercial bleach such as Linco, etc.

**Acorn Engineering Company**
**800-488-8999 or 626-336-4561**
**FAX 626-961-2200**
**P.O. BOX 3527 • CITY OF INDUSTRY, CA 91744-0527 (U.S.A.)**

3030-738-000 Rev. 08/22/11

# INSTALLATION INSTRUCTIONS

ACORN ENGINEERING COMPANY

# TERRAZZO-WARE Mop Sink

**800-488-8999 or 626-336-4561**

**FAX 626-961-2200**

**P.O. BOX 3527 • CITY OF INDUSTRY, CA 91744-0527 (U.S.A.)**



***Mop Sinks***

## 1 HANDLING

Carefully remove **Mop Sink** from carton at installation point. Avoid placing **Mop Sink** on its edge. (This precaution will prevent damage to corners of **Mop Sink**.)

*METHOD FOR CHECKING FACE OF **Mop Sink** FOR TRANSPORTATION DAMAGE:*

A. Wipe face of **Mop Sink** with a wet cloth (Water).

B. When the water evaporates, any slight crack in the **Mop Sink** will be noticeable.

**REMOVE MOP BASE CAREFULLY FROM CARTON**

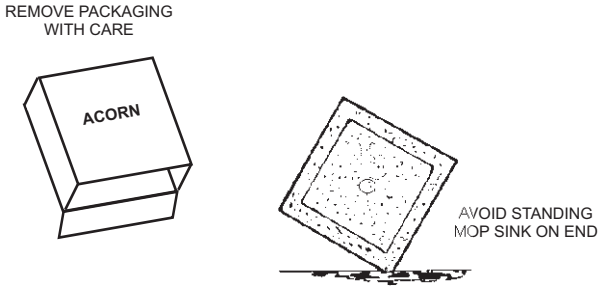


## 2 LEVELING

Level **Mop Sink** carefully. For proper installation, establish a 1/4" clearance between **Mop Sink** and the walls. A layer of mortar or sand must be placed in area where the **Mop Sink** is to be installed. This procedure is recommended in order to support **Mop Sink** should the sub floor be uneven. Grout should be exposed along edges.

***NOTE: Inspect and test for proper drainage.**

*NOTE:* Mortar or sand must cover the entire area between **Mop Sink** and building floor.

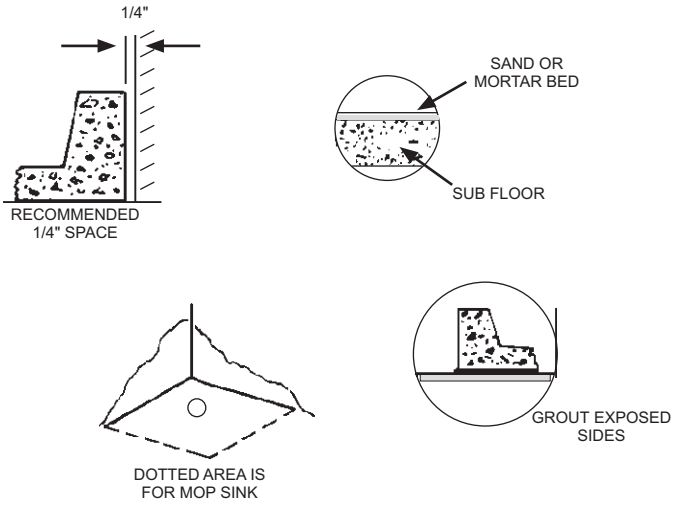


## 3 WARNING!

<u>DO NOT DROP MOP SINK OVER EXPOSED PIPE.</u>

It is advisable to remove drain pipe and set **Mop Sink** in place. Insert pipe through drain in **Mop Sink** back into “P” trap. Tighten with an internal pipe wrench.

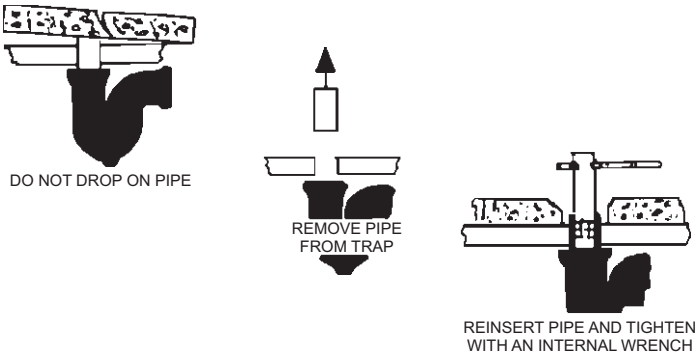

# INSTALLATION INSTRUCTIONS

ACORN ENGINEERING COMPANY

# TERRAZZO-WARE *Mop Sink*

**800-488-8999 or 626-336-4561**

**FAX 626-961-2200**

**P.O. BOX 3527 • CITY OF INDUSTRY, CA 91744-0527 (U.S.A.)**



***Mop Sinks***

## 4 RECOMMENDED PROCEDURE.

*INSTALLATION INSTRUCTIONS:*

*1.* Cut drain pipe to extend 1-3/8" into drain body. Drain pipe should be even with top of gasket when installation is completed. Position **Mop Sink** over 2" waste pipe making sure that pipe is centered in drain body.

2. Lubricate gasket with soap solution and stretch over 2" pipe with letters facing up.

3. Push gasket as far as possible into joint.

4. Using a hammer and caulking tool or 1/4" X 3/4" X 6" piece of wood instead of a caulking tool, work around the gasket with a series of blows and gradually drive gasket into drain body until it bottoms. Drain pipe should be even with the top of gasket.

5. Test connection before covering or concealing. To test: plug 2" drain and fill receptor with water. Check for leaks. Verify proper drainage. **This must be done before finishing walls.**

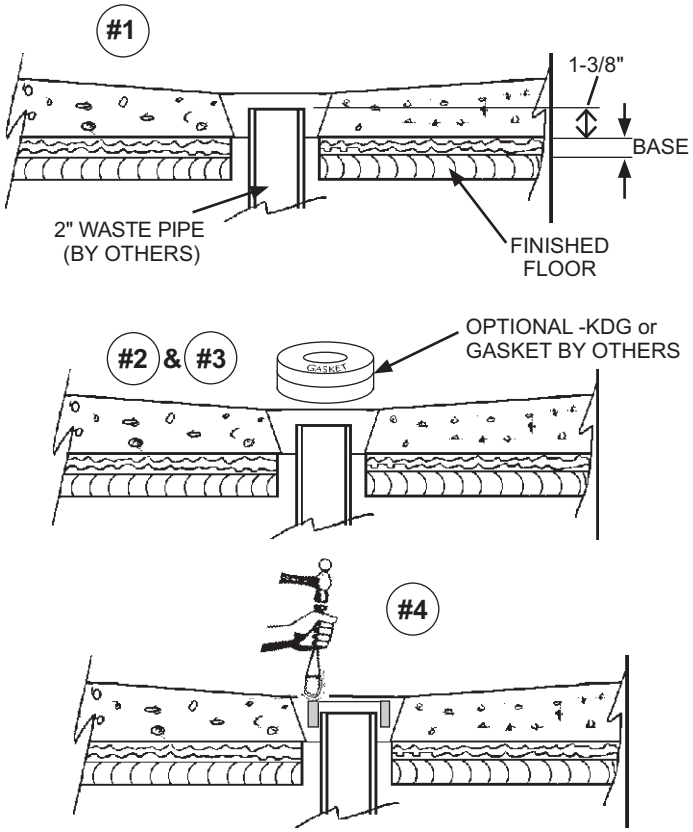


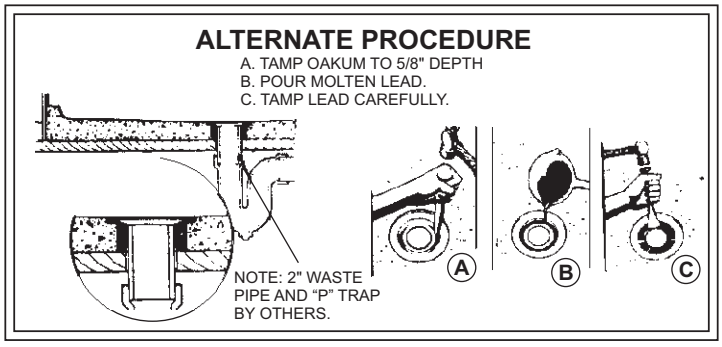


## 5 WARNING!

*MODELS WITH TILING FLANGE OPTIONS:*

A. Do not let rough wall material overlap flange.

B. Do not attach flange to building wall.

C. Let finished wall (tile, etc.) overlap and rest on shoulder.

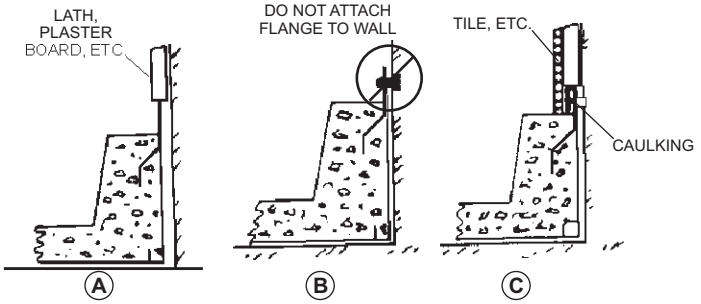

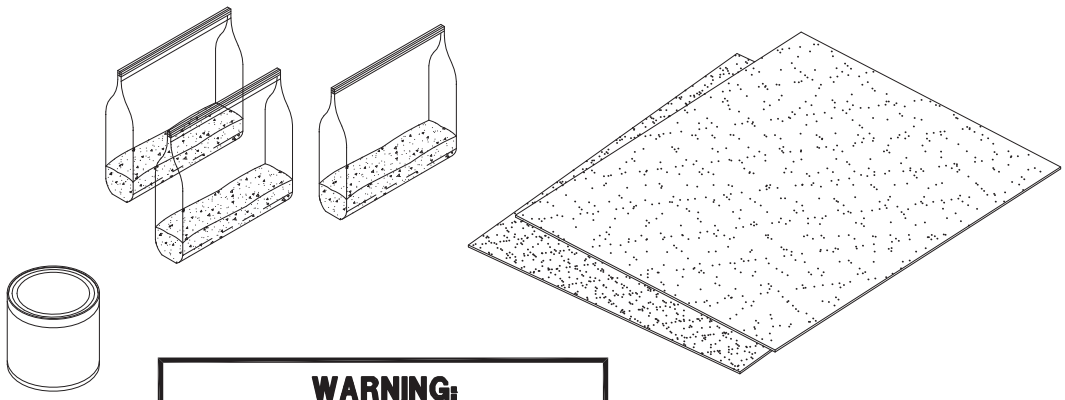

**WARNING:**
**READ MATERIAL SAFETY DATA SHEETS BEFORE USING.**

## INSTRUCTIONS:

A– COMPLETELY CLEAN SURFACE TO BE REPAIRED. ALLOW TO DRY 24 HOURS BEFORE PROCEEDING.

B– FOR SMALL REPAIRS MIX CEMENT(S) TO PROPER CONSISTENCY. FOR LARGER AREAS ADD AGGREGATE TO MIX AS NECESSARY. SEE STEP E BELOW.

C– PRESS CEMENT INTO AREA TO BE REPAIRED.

D– DAMPEN A PUTTY KNIFE WITH WATER AND LEVEL THE CEMENT WITH THE SURROUNDING SURFACE.

E– IF THE REPAIR IS LARGE AND/OR TOO DEEP, PRESS A SMALL AMOUNT OF AGGREGATE INTO THE CEMENT, ALLOWING THEM TO PROJECT SLIGHTLY HIGHER THAN THE SURROUNDING SURFACE.

F– ALLOW THE REPAIRED AREA TO DRY 4–6 HOURS BEFORE PROCEEDING.

G– USING THE 20 GRIT SANDPAPER SUPPLIED, SAND THE REPAIRED AREA UNTIL SMOOTH AND LEVEL WITH SURROUNDING SURFACE.

H– USING THE 220 GRIT SANDPAPER SUPPLIED, SAND THE REPAIRED AREA AND IMMEDIATELY SURROUNDING AREA TO PREPARE FOR THE URETHANE COATING. IT IS ONLY NECESSARY TO FEATHER THE COATING SURROUNDING THE REPAIR, NOT REMOVE IT COMPLETELY.

I– CLEAN THE AREA TO BE COATED TO REMOVE ALL RESIDUAL SANDING DUST. IF WATER IS USED, ALLOW TO DRY FOR 2–3 HOURS BEFORE PROCEEDING.

J– APPLY 1–2 COATS OF URETHANE AS NEEDED, ALLOWING SEVERAL HOURS BETWEEN COATS. ALLOW 24 HOURS FOR DRYING BEFORE EXPOSURE TO WATER.

## TERRAZZO REPAIR KIT

- 1 CAN OF AIR–DRY URETHANE
- 1 SHEET 20 GRIT SANDPAPER
- 1 SHEET 220 GRIT SANDPAPER
- MATERIAL SAFETY DATA SHEET
- COLOR MIX & AGGREGATES:

| |
|---|
| **PALOMINO COLOR MIX:** |
| 6 OZ. WHITE CEMENT |
| 3 OZ. AGGREGATE, IVORY #1 |
| 3 OZ. AGGREGATE, IVORY #2 |
| **PLATINUM GRAY COLOR MIX:** |
| 6 OZ. GRAY CEMENT |
| 6 OZ. WHITE CEMENT |
| 3 OZ. AGGREGATE, INYO WHITE #1 |
| 3 OZ. AGGREGATE, INYO WHITE #2 |
| **HYBRID ROSE COLOR MIX:** |
| 6 OZ. WHITE CEMENT |
| 3 OZ. AGGREGATE, WHITE ROSE #1 |
| 3 OZ, AGGREGATE, WHITE ROSE #2 |
| 3 OZ. AGGREGATE, SAN SABA WHITE #1 |
| 3 OZ. AGGREGATE, SAN SABA WHITE #2 |
| **MIDNIGHT ROSE COLOR MIX:** |
| 6 OZ. BLACK PIGMENT |
| 6 OZ. WHITE CEMENT |
| 3 OZ, AGGREGATE, INYO WHITE #1 |
| 3 OZ. AGGREGATE, INYO WHITE #2 |
| 3 OZ. AGGREGATE, WHITE ROSE #1 |
| 3 OZ. AGGREGATE, WHITE ROSE #2 |

ACORN ENGINEERING COMPANY
P.O. BOX 3527 Industry, CA 91744
15125 Proctor Ave Industry, CA 91746
(626) 336–4561 FAX (626) 961–2200

TITLE **TERRAZZO REPAIR KIT INSTRUCTIONS**

| MANUFACTURE DATE | DATE ISSUED | DRAWING NUMBER |
|---|---|---|
| **JUNE 1995 TO PRESENT** | **04/08/03** | **9912-499-001** |
| | DATE REVISED | |