ELKAY
SPECIFICATIONS

Everyday Single Hole Deck Mount Kitchen Faucet with Pull-down Spray Forward Only Lever Handle

Model(s) LK6000

PRODUCT SPECIFICATIONS

Everyday Single Hole Deck Mount Kitchen Faucet with Pull-down Spray Forward Only Lever Handle. Faucet has a flow rate of 1.5 GPM, and is made of Brass material, with a Ceramic Disc valve. Faucet requires 1 faucet holes.

Mounting Type:	Deck Mount
Special Features:	Low Flow Removable Deck Plate/Escutcheon Solid Brass Waterway Construction
Spray Type:	Pull Down
Finish:	Chrome (CR), Lustrous Steel (LS)
Handle Type:	Forward Only Lever Handle
Deck Clearance:	7-3/8"
Spout Reach:	9"
Spout Height:	15-1/4"
Hole Drillings:	1
Material:	Brass
Valve Type:	Ceramic Disc
Valve Connection:	3/8" Female Compression Hose Assembly
Flow Rate:	1.5 GPM
Faucet Hole Size (min):	1-3/8"
Countertop Thickness:	2-1/2
Spout Swing Rotation:	360°
Spout Type:	Pull-down Spray
Spray Functions:	Aerated,Pause,Spray

Special Note: 1.5 GPM flow regulator installed (2.2 GPM flow regulator also included with faucet)





A Century of Tradition and Quality.
For more than 100 years, Elkay has been making innovative products and providing exceptional customer care. We take pride in offering plumbing products that make life easier, inspire change and leave the world a better place.

Product Compliance: ADA & ICC A117.1
ASME A112.18.1/CSA B125.1
CEC
NSF 372 (lead free)
NSF 61 (Q≤1)

Complies with ADA & ICC A117.1 accessibility requirements when installed according to the requirements outlined in these standards.

Clean and Care Manual (PDF)
Installation Instructions (PDF) - lk6000 - install sheet
Warranty (PDF)

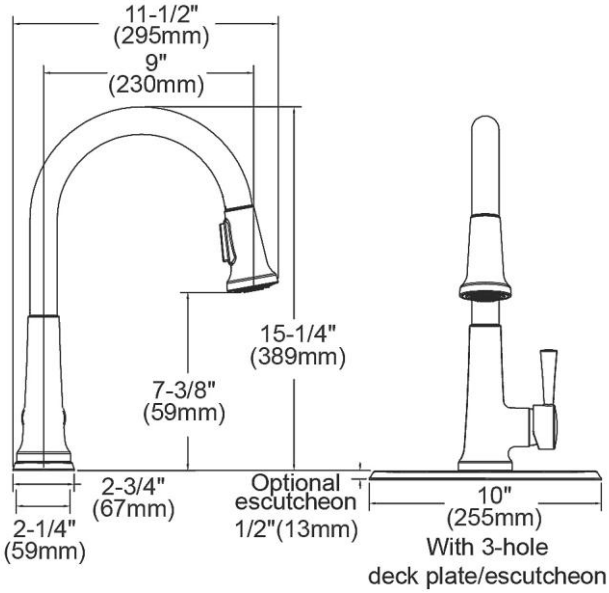

PART:_____QTY: _____

PROJECT:_____

CONTACT:_____

DATE:_____

NOTES:_____

APPROVAL:

In keeping with our policy of continuing product improvement, Elkay reserves the right to change product specifications without notice. Please visit elkay.com for the most current version of Elkay product specification sheets. This specification describes an Elkay product with design, quality, and functional benefits to the user. When making a comparison of other producers' offerings, be certain these features are not overlooked.

Optional Accessories		
LK320	2" x 4-3/4" x 3" Soap / Lotion Dispenser Spec Sheet (PDF)	

In keeping with our policy of continuing product improvement, Elkay reserves the right to change product specifications without notice. Please visit elkay.com for the most current version of Elkay product specification sheets. This specification describes an Elkay product with design, quality, and functional benefits to the user. When making a comparison of other producers' offerings, be certain these features are not overlooked.

© 2026

Everyday Single Hole Deck Mount Kitchen Faucet with Pull-down Spray Forward Only Lever Handle

Model(s) LK6000

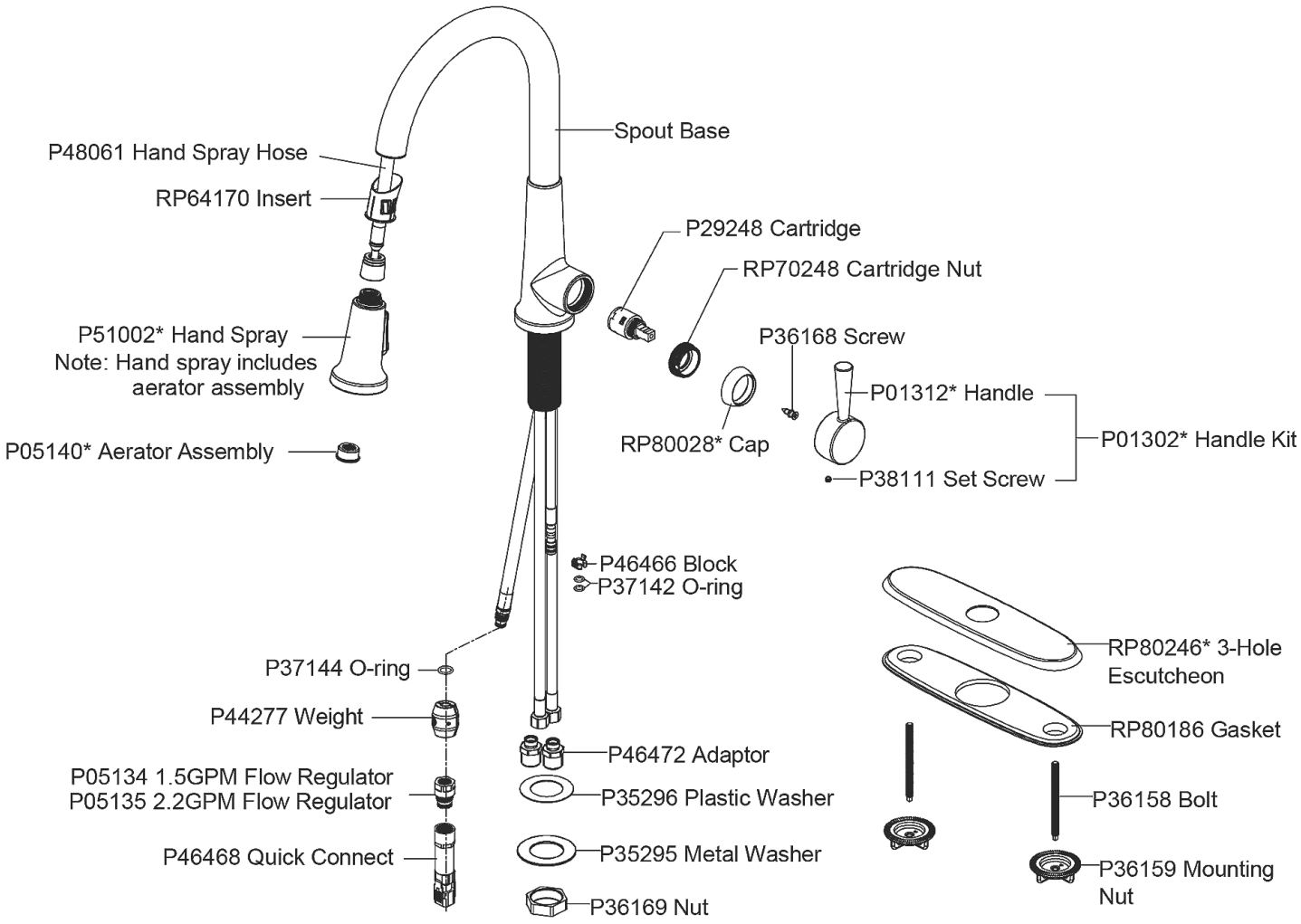

In keeping with our policy of continuing product improvement, Elkay reserves the right to change product specifications without notice. Please visit elkay.com for the most current version of Elkay product specification sheets. This specification describes an Elkay product with design, quality, and functional benefits to the user. When making a comparison of other producers' offerings, be certain these features are not overlooked.