LACAVA

AQUAGRANDE

vanity-top, wall-mount, or on-counter sink

5464

Specifications:

Installation:	Vanity-top, wall-mount, or on-counter
Exterior Dimensions:	23 1/2”w x 18 1/2”d x 6 1/4”h
Material:	Porcelain
Weight:	56 lbs
Overflow:	Yes
Finishes:	001 - White
Faucet Holes:	00 - no hole 01 - one centered hole 02 - two hole - center and right, 4” spread 03 - three hole, 8” spread
Cutout Size:	10” x 8” (template available upon request)
Faucet Hole Size:	Ø 1 3/8”
Drain Hole Size:	Ø 1 3/4”

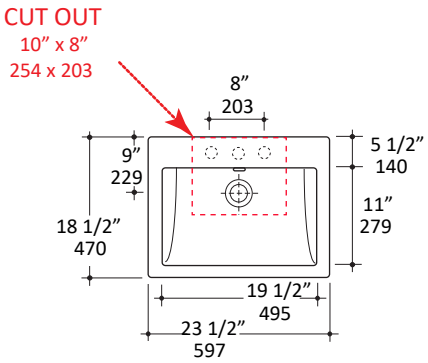

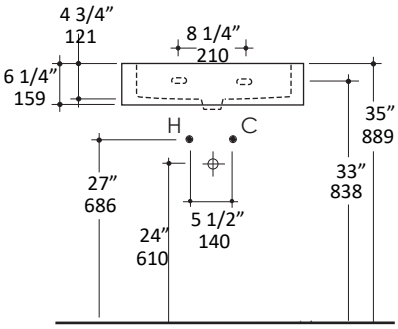

Features:

- Porcelain sink with overflow
- Most standard American drains can also be used
- Glazed back wall
- Location of wall-mount holes is approximate
- Wall-mounting bolts are included
- Unglazed bottom
- Current cut-out template can be requested

Codes + Standards:

- Meets and exceeds applicable national codes and standards

ADA compliant when installed to specific requirements of this regulation

Recommended Items:

- Furniture
  - AQG-BX-24 - Floor-standing metal console stand with towel bars and optional shelf
  - AQG-FR-24 - Floor-standing metal console stand with a towel bar and optional shelf
  - AQG-W-24 - Wall-mount under-counter vanity with two drawers
  - LUC-W-24 - Wall-mounted under-counter vanity with large wood pull on single drawer
- European drain with overflow
  - 7100-12
  - 7100-13OF
  - 7100-16OF

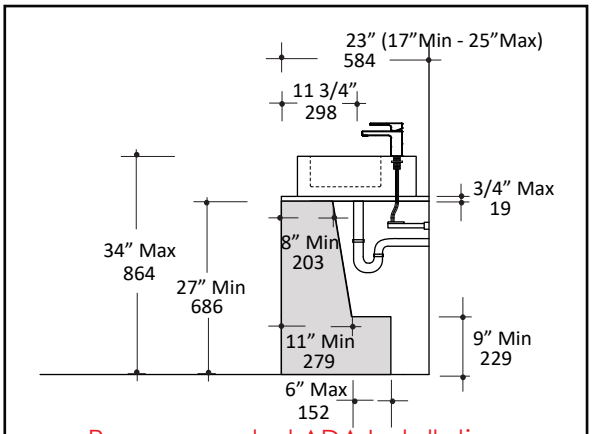

Recommended ADA Installation

LACAVA reserves the right to revise any dimension or information on this sheet without notice. Dimensions are nominal and may vary within an industry accepted tolerance of 1/4”.
Drawings provided herein are meant to give the user an idea of the product and are not made to scale.
Revised: 7/15/2019