Installation Instructions

Adjustable Shower Drains

Note: PROFLO shower drain instructions assume the shower framing has been constructed and the flooring is plywood. Generally the same principle apply to concrete flooring where the sloped mortar bed is applied beneath the pan liner. Also the instructions apply to either PVC pan liner or CPE pan liner which are installed the same with the exception of the bonding adhesive used for seaming and dam corner applications.

Installation:

1. For typical wood subfloor cut a 4.5” diameter hole in the center of the shower floor where the tile shower drain would normally be positioned. Disassemble the tile shower drain. Lay the tile shower drain base in the opening so the flange of the drain base rests on top of the subfloor. Solvent weld the drain base to the drain pipe using the appropriate solvent cement. See Figure A.

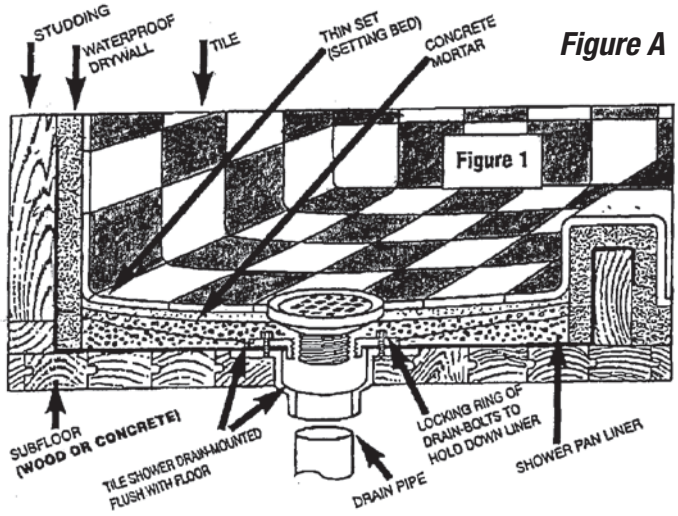

Figure A

2. Cover the drain base opening with duct tape to keep debris from entering the drain. Begin by applying Portland Sand/Cement mixture mortar bed over the subfloor at 1/4” per foot slope from the wall framing to the top of, but not over, the drain base. After this step the sloped mortar bed should be flush with the top surface of the drain base.

3. After the sloped mortar bed has cured, the pan liner dimensions need to be determined. Pan liner dimensions should be sufficient to completely cover the floor, turn up all sidewalls at least 2” above the finished curb height, and adequately cover the curb. Lay the pan liner on a clean floor surface, measure, and cut to the appropriate dimensions. **Note: Seaming may be required in larger showers. See Figure B.**

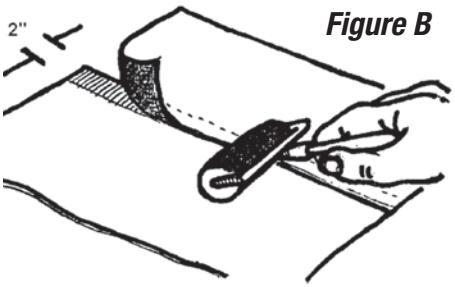

Figure B

4. **Before installing the pan liner remove the tape from the drain base and apply a 1/4”-3/8” bead of 100% silicone caulk around the upper surface of the drain base approximately 1” in from the outside edge. This will provide a seal between the underside of the pan liner and the drain base surface.** Screw the clamping ring bolts into the drain base to 2-3 thread depth. Before the caulk dries lay the premeasured pan liner on the floor and over the drain body. At the top of each bolt slit an “X” so the pan liner slides over the bolts and down to the drain base surface. Press pan liner firmly into place to ensure a seal between the drain base and the bottom surface of the pan liner.

5. Work the pan material from the drain body to the sidewall framing and curb threshold so it lays flat on the floor surface. If desired, an adhesive can be used to bond pan liner to the floor and curb. Prior to use of adhesive, confirm compatability of adhesive to the pan liner. Fold corners and nail or staple pan liner to the sidewall framing or wall studs 1/2” below the upper edge of the material to hold it in place. Nail or staple the remainder of the pan liner to the sidewall framing or wall studs 1/2” below the upper edge of the material. See Figure C.

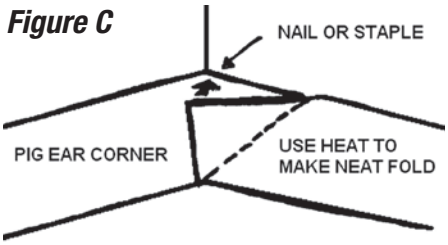

Figure C

6. For outside corners or curbs where it’s necessary to cut the pan liner use a dam corner to cover the cut area. To bond dam corners in the cut area use bonding adhesive.

Distributed Exclusively by Ferguson and Wolseley Canada

© 2011 Ferguson Enterprises, Inc. All Rights Reserved

Adjustable Shower Drains

7. Locate where the drain hole is on the drain base and cut out the pan liner material to the dimension of the drain hole on the drain base. Place clamping ring over the bolts and slide the ring counter clockwise so it's locked in place. Tighten the bolts so they're snug. Make sure the weep holes are clear of any residual pan liner material or silicone. Note: The clamping ring can increase the height of the finished shower floor by approximately 3/4". You will see the extension if you turn the ring upside down. Simply tighten it to the drain base the way you normally would, only inverted.
8. Water test the installation by closing off the drain pipe opening with a pneumatic or mechanical test plug. Fill the shower floor with water just below the top of the curb and let it sit for four (4) hours. Observe for leaks and repair if necessary. Retest the installation. Repeat until the installation is leak free. Completely drain the water before proceeding to Step 9.
9. A reinforcement bed of mortar needs to be applied over the membrane (see step 11) but before doing so nail water impervious drywall to the wall studs to approximately 1" above the pan liner surface. Note: The use of mortar vs. drywall for the curb should be considered because you can avoid the use of nails as you construct this part of your installation.
10. The clamping ring has an inner thread pattern that will accept the drain barrel and strainer assembly. Once you determine the finished height of the shower thread the drain barrel into the inside clamping ring thread so the finished floor will be flush with the top of the drain barrel. As mentioned in step 7 you can increase the shower drain height by inverting the clamping ring.

11 Before the final mortar application place some pea gravel over the weep holes so the mortar doesn't completely cover them. Now lay the minimum 1-1/2" reinforcement mortar bed of concrete over the pan liner from the wall to the drain barrel, leaving enough room for the final thinset and tile application. See Figure D.

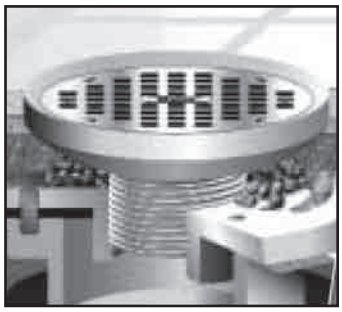

Figure D

Tile Shower Drain

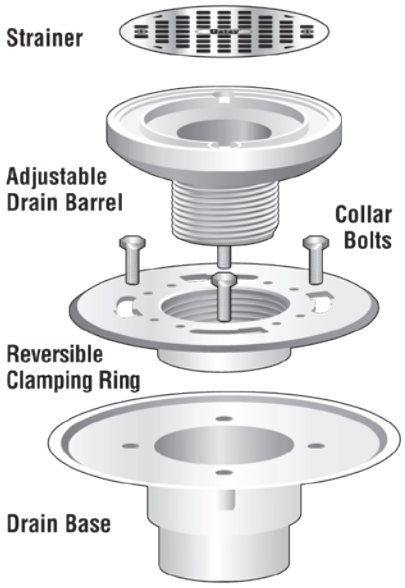

Distributed Exclusively by Ferguson and Wolseley Canada

© 2011 Ferguson Enterprises, Inc. All Rights Reserved