Model 375AST(R) & 375ASTDA(R)

Reduced Pressure Principle Assembly (2 1/2", 3", 4" & 6")
Reduced Pressure Detector Assembly (2 1/2", 3", 4" & 6")

LEAD-FREE*

ZURN WILKINS

(Patent No. 5,913,331)

*This product contains a weighted average lead content less than 0.25% for wetted surfaces.

❑ Installation ❑ Testing ❑ Maintenance Instructions

INSTALLATION INSTRUCTIONS

CAUTION: Installation of Backflow Preventers must be performed by qualified, licensed personnel. The installer should be sure the proper device has been selected for the particular installation. Faulty installation could result in an improperly functioning device.

ZURN WILKINS Model 375AST Series Assemblies are for use on potable water lines where a health hazard exists in the event of a backflow situation.

Damage to the device could result wherever water hammer and/or water thermal expansion could create excessive line pressure. Where this could occur, shock arrestors, check valves and/or pressure relief valves should be installed downstream of the device.

If installation is in a pit or vault, the Backflow Preventer must never be submerged in water because this could cause a cross-connection. Make sure that the pit or vault always remains dry by providing ample drainage. (Consult local codes.)

1. Before installing a Model 375AST Series Backflow Preventer, flush the line thoroughly to remove all debris, chips and other foreign matter. If required, a strainer should be placed upstream of the Backflow Preventer. **CAUTION**: Do not use a strainer in seldom used emergency waterlines such as fire lines.
2. Provide adequate space around the installed unit so that the test cocks will be accessible for testing and servicing.
3. Install valve at least 12 inches above surrounding flood level.
4. The Model 375 series has been tested and approved in the horizontal position. Contact factory before installing in other orientations.
5. Always consult local codes for installation methods, approvals and guidance.

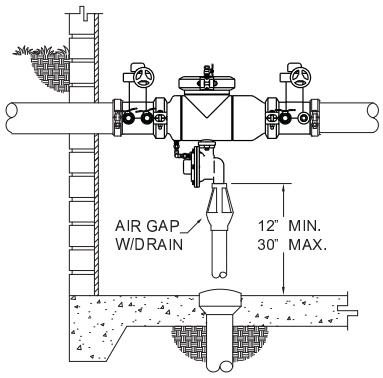

ZURN WILKINS MODEL 375ASTBG
INDOOR HORIZONTAL INSTALLATION

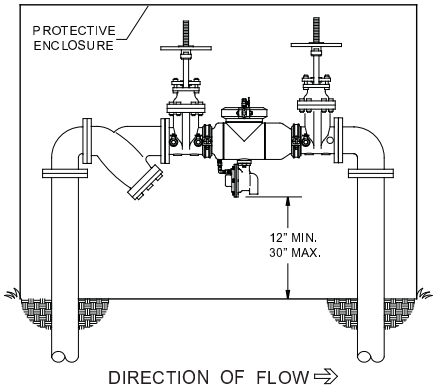

ZURN WILKINS MODEL 375AST
OUTOOR HORIZONTAL INSTALLATION

INDOOR INSTALLATION

Indoor installation is preferred in areas that are subject to freezing conditions. All the basic installation instructions apply to such installations. **CAUTION: An adequately sized drain is required to prevent possible water damage due to relief valve discharge.**

OUTDOOR INSTALLATION

The Model 375AST Series Backflow Preventer may be installed outdoors only if the device is protected against freezing conditions. Exposure to freezing conditions will result in improper function or damage to the device. The installation location must be kept above 32°F. All the basic installation instructions apply.

PLACING THE DEVICE IN SERVICE

1. Start with both shut-off valves closed. Slowly open the inlet shut-off valve until the backflow preventer is completely pressurized. A brief discharge from the relief valve may occur while the device is pressurizing. The discharge should cease by the time the shut-off valve is fully open. If the discharge does not stop, refer to "MAINTENANCE INSTRUCTIONS" for repair procedures.
2. After the device has been pressurized, vent all trapped air by slightly opening each of the four test cocks.
3. Slowly open the downstream shut-off valve. The Model 375AST Series Backflow Preventer is now in service.
4. If spitting or intermittent discharges from the relief valve are noted, it could be a result of pressure fluctuation and/or a water hammer condition in the system. If such conditions exist, install water pressure reducing valves or water hammer shock arrestors in compliance with industry standards as needed.
5. After the Model 375AST Series has been properly installed, test the device (see "TEST PROCEDURES"). If the device fails the test, remove the first and second check valves and thoroughly flush the device. If the relief valve fails to operate properly, inspect the sensing passage for clogging (see "MAINTENANCE INSTRUCTIONS"). Clean rubber seals of all debris and place unit back in service.

375ASTOSYP

<u>Proposition 65 Warning</u> This product contains chemicals known to the State of California to cause cancer or birth defects or other reproductive harm.

Proper performance is dependent upon licensed, qualified personnel performing regular, periodic testing according to ZURN WILKINS' specifications and prevailing governmental & industry standards and codes and upon following these installation instructions. Failure to do so releases ZURN WILKINS of any liability that it might otherwise have with respect to that device. Such failure could also result in an improperly functioning device.

Testing Procedures

MODEL 375AST SERIES ASSEMBLY

Equipment Required: Differential pressure gauge test kit.

TEST NO. 1 - RELIEF VALVE OPENING POINT

REQUIREMENT:

The differential pressure relief valve must operate to maintain the zone between the two check valves at least 2 psi less than the supply pressure.

PROCEDURE:

1. Flush water through test cocks #1, #2 (open #2 slowly), #3 and #4 by opening and closing each test cock one at a time, to eliminate foreign material.
2. Install appropriate fittings to test cocks. Attach hose from the high side of the differential pressure gauge to the #2 test cock then attach hose from the low side of the gauge to the #3 test cock. Open test cock #3 slowly and then bleed all air from the hose and gauge by opening the low side bleed needle valve.
3. Maintain the low side bleed needle valve in the open position while test cock #2 is opened slowly. Open the high side bleed needle valve to bleed all air from the hose and gauge. Close the high side bleed needle valve, then close the low side bleed needle valve after the gauge reading has reached the upper end of the scale.
4. Close the #2 shut-off valve. If the gauge reading drops to the low end of the gauge scale and the differential pressure relief valve discharges continuously, then the #1 check valve is leaking. If this occurs, Tests #1, #2 and #3 cannot be completed (See USC Maintenance Guide). However, should the gauge reading remain above the differential pressure relief valve opening point, then observe the gauge reading. This is the apparent pressure drop across the #1 check valve.
5. Open the high side control needle valve approximately one turn, and then open the low side control needle valve no more than 1/4 turn to by-pass water from the #2 test cock to the #3 test cock. Observe the differential pressure reading as it slowly drops to the relief valve opening point. Record this opening point value when the first discharge of water is detected. Close the low side needle valve.

TEST NO. 2 - TIGHTNESS OF #2 CHECK VALVE

REQUIREMENT:

The #2 check valve shall be tight against backpressure.

PROCEDURE:

1. Maintain the #2 shut-off valve in the closed position (from Test #1). Vent all air through the vent hose by opening the vent needle valve. Close the vent needle valve only (The high side control needle valve is to remain open).
2. Attach the vent hose from the gauge to the #4 test cock, then open the #4 test cock. Bleed water from the zone by opening the low side bleed needle valve on the gauge in order to re-establish the normal reduced pressure within the zone. Once the gauge reading reaches a value above the #1 check valve pressure drop, close the low side bleed needle valve.
3. Open the vent needle valve. If the indicated differential pressure reading remains steady then the #2 check valve is reported as "closed tight." Go to Test #3. If the differential pressure reading falls to the relief valve opening point, bleed water through the low side bleed needle valve until the gauge reading reaches a value above the #1 check valve pressure drop. If the gauge reading settles above the relief valve opening point, record the #2 check valve as "closed tight," and proceed to Test #3. If the differential pressure reading falls to the relief valve opening point again, then the #2 check valve is noted as "leaking," and Test #3 cannot be completed. If the differential pressure reading drops, but stabilizes above the relief valve opening point, the #2 check valve can still be reported as "closed tight."

   Note: Due to disc compression, you may need to bleed off water through low side bleed needle valve several times before the gauge reading will settle above relief valve opening point.

Capacity thru Schedule 40 Pipe				
Pipe size	5 ft/sec	7.5 ft/sec	10 ft/sec	15 ft/sec
2 1/2"	75	112	149	224
3"	115	173	230	346
4"	198	298	397	595
6"	450	675	900	1351
8"	780	1169	1559	2339
10"	1229	1843	2458	3687

TEST NO.3 - TIGHTNESS OF #1 CHECK VALVE

REQUIREMENT:

The static pressure drop across #1 check valve shall be greater than the relief valve opening point (test #1), and at least 5.0 psid.

PROCEDURE:

1. With the vent hose connected to test cock #4 as in step 3 of Test #2, bleed water from the zone through the low side bleed needle valve on the gauge until the reading exceeds the #1 check valve pressure drop. Close the low side bleed needle valve. After the gauge reading settles, the steady state differential pressure reading indicated (reading is not falling on the gauge) is the actual static (i.e., no flow) pressure drop across check valve #1 and is to be recorded as such.
2. Close all test cocks, slowly open shutoff valve #2 and remove equipment.

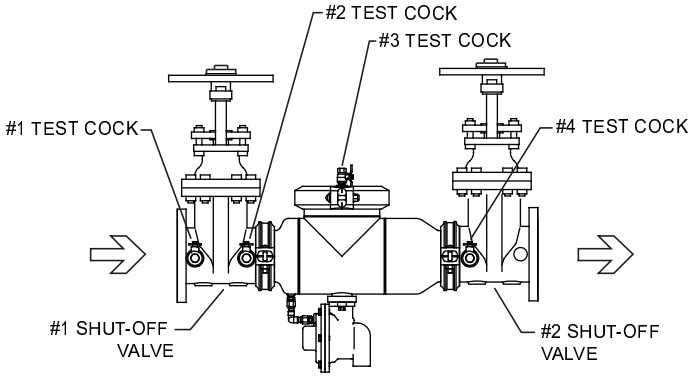

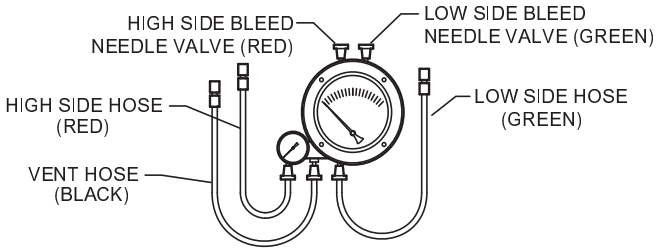

SPECIFICATIONS

Maximum working water pressure: 175 PSI
Maximum working water temperature: 140°F
Hydrostatic test pressure: 350 PSI
End connections: Flanged ANSI B16.1 Class 125
Grooved AWWA C606

ZURN WILKINS
1747 Commerce Way, Paso Robles, CA 93446 Phone:855-663-9876 Fax:805-238-5766
www.zurn.com

Maintenance Instructions

CHECK ASSEMBLY

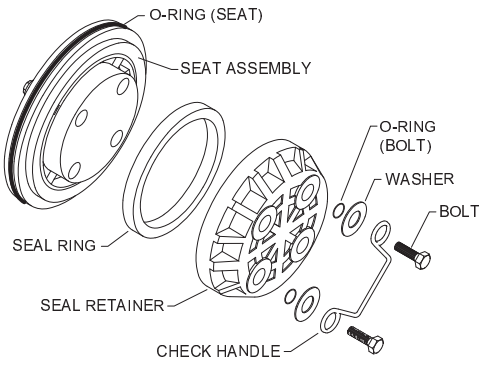

(2 ½" - 6")

All Model 375AST Series Backflow Preventers must be inspected and maintained by licensed personnel at least once a year or more frequently as specified by local codes. Replacement of worn or damaged parts must only be made with genuine "ZURN WILKINS" parts.

GENERAL MAINTENANCE

1. Clean all parts thoroughly with water after disassembly.
2. Carefully inspect rubber seal rings and o-rings for damage.
3. Test unit after reassembly for proper operation (refer to "TESTING PROCEDURES").

SERVICING RELIEF VALVE

1. Remove relief valve cover bolts and cover. Gently pull on diaphragm to remove the cartridge assembly.
2. Inspect seal ring for cuts and embedded debris. Turn over or replace if required.
3. Disassemble cartridge by unscrewing relief valve retaining screw.
4. Inspect diaphragm and o-rings for damage. Replace required parts and apply a light coat of lubricant to plunger o-ring.
5. Carefully reassemble cartridge assembly.
6. Inspect relief valve seat for wear on seating surface. If damaged, replace seat and seat o-ring. Install spring over seat guides.
7. Insert cartridge assembly into relief valve body.
8. Replace relief valve cover and cover bolts.
9. Place the device in service and test per "TESTING PROCEDURES" on page 2.

NOTE: Disassembly of the seat assembly is not recommended. If the seat assembly needs repair, please contact factory.

SERVICING CHECK VALVES

1. Close the outlet and then the inlet shut-off valves.
2. Open No. 2, 3 and 4 test cocks to release internal pressure. Leave them open during check removal and reinstallation.
3. Loosen and remove the two nuts, bolts and gasket from the grooved coupling around the access cover.
4. If the valve has a plastic retainer on the #1 check, grasp one of the exposed ends, push down and then pull toward the #2 check. The retainer should "spiral" out of the groove around the check.
5. Remove the #2 check by locating one of the two spring-loaded plate retainers around the face of the check. Pinch the sides of the spring together and rotate the plates out of the body groove one at a time. Remove the 2nd retainer the same way.
6. **Always service the checks one at a time to avoid mixing parts**.
   Start by removing the hardware and o-rings from the back of the check assembly (See "Check Assembly" illustration). Separate the seal retainer from the assembly to expose the seal ring.
7. Inspect the seal ring for cuts or embedded debris. If the reverse side of the seal is unused, the seal ring can be inverted and used temporarily until a new seal is obtained. Inspect seat o-ring and replace if cut or damaged in any way.
8. Inspect valve cavity and seating areas. Flush with water to remove any debris.
9. Reassembly, Lubricate the #2 check o-ring, install in the body and close the #4 test cock. Install the #2 check retainers into the body groove one plate at a time, squeezing the spring ends together to clear the stops on the face of the seat.
10. Lubricate and install the #1 check. Close the #2 test cock. Install the plastic retainer by inserting one end into the body groove and then sliding your hand around the face of the retainer, pushing it into the groove as you go. The retainer will "snap" into place when fully seated.
11. Lubricate the outside surface of the grooved coupling gasket. Reassemble access cover and grooved coupling, making sure the ends of the coupling touch each other. Close any remaining open test cocks and place valve back in service.

RELIEF VALVE ASSEMBLY

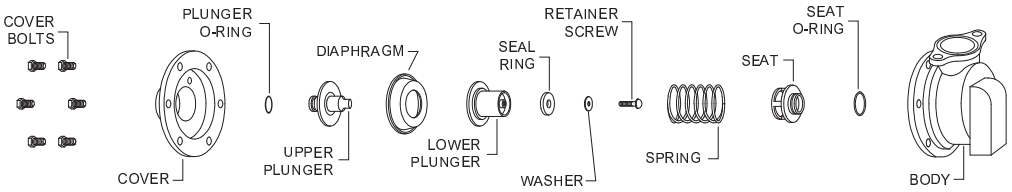

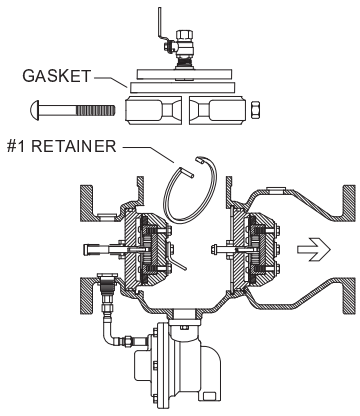

FIGURE 1

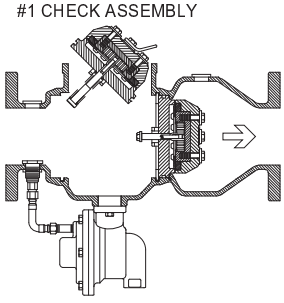

FIGURE 2

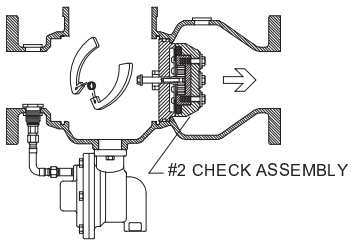

FIGURE 3

Troubleshooting

PROBLEM	POSSIBLE CAUSES	CORRECTIVE ACTION
1. SUDDEN OR RAPID SPITTING	1. Drop in inlet pressure.	1. Install an in-line spring loaded check valve or pressure reducing valve upstream of Backflow Preventer.
	2. Sudden increase in downstream pressure due to waterhammer from quick closing shut-off valve installed downstream.	2. Install an in-line spring loaded check valve or pressure reducing valve downstream of Backflow Preventer.
2. LIGHT INTERMITTENT DRIP	1. Slightly fouled #1 check.	1. Clean #1 check and/or turn check valve seal ring over or replace.
	2. Slightly fouled relief valve seat.	2. Clean relief valve seat and/or turn relief valve seal ring over or replace.
3. CONTINUOS DISCHARGE	1. Fouled #1 check and/or #2 check.	1. Clean check valves and/or turn check valve seal ring over or replace.
	2. Fouled relief valve seat.	2. Clean relief valve seat and/or turn relief valve seal ring over or replace.

Repair Kits

SIZE	MODEL	MODEL 375 RELIEF RUBBER ONLY	MODEL 375 RELIEF COMPLETE	MODEL 375 CHECKS ONLY
2 1/2" - 4"	375AST/375ASTDA	RK212-375R	RK212-375	RK4-350ST
6"	375AST/375ASTDA	RK212-375R	RK212-375	RK6-350ST

Performance Characteristics

FLOW CHARACTERISTICS

MODEL 375AST 2 1/2", 3" & 4" (STANDARD & METRIC)

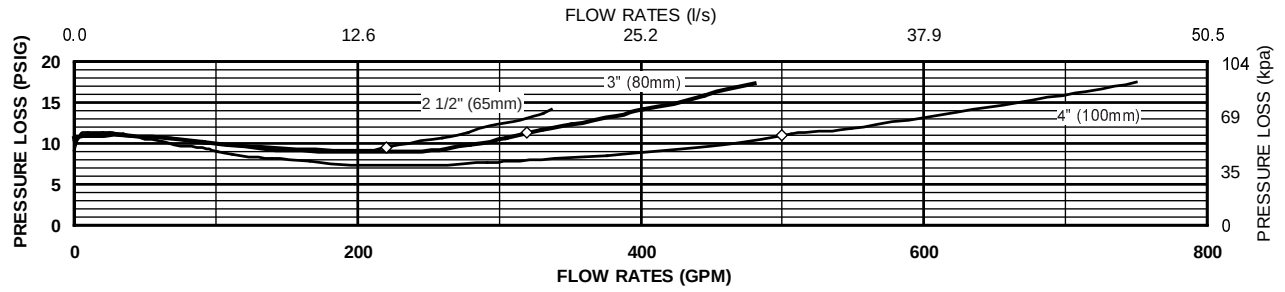

MODEL 375AST 6" (STANDARD & METRIC)

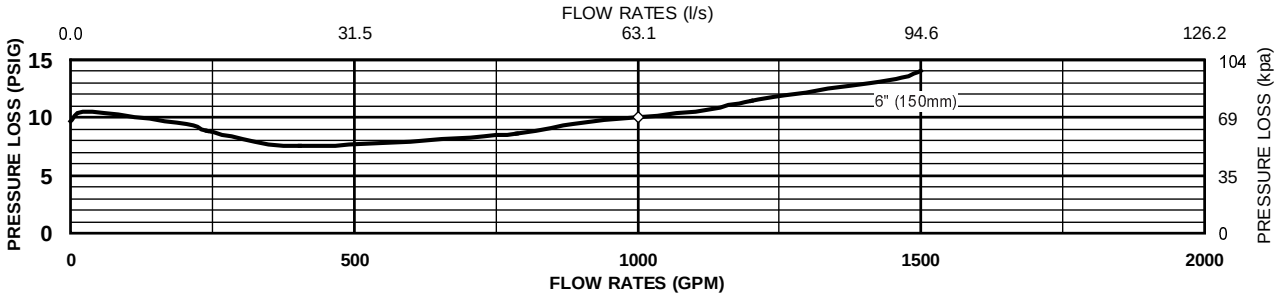

MODEL 375ASTDA 2 1/2", 3" & 4" (STANDARD & METRIC)

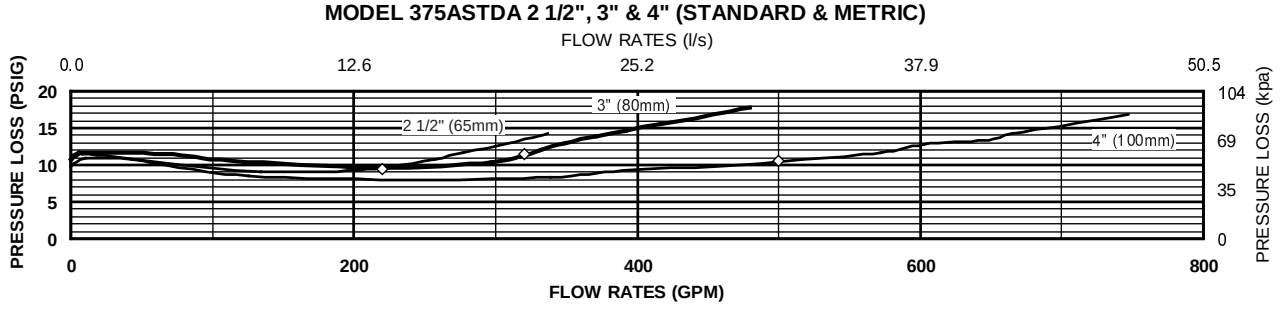

MODEL 375ASTDA 6" (STANDARD & METRIC)

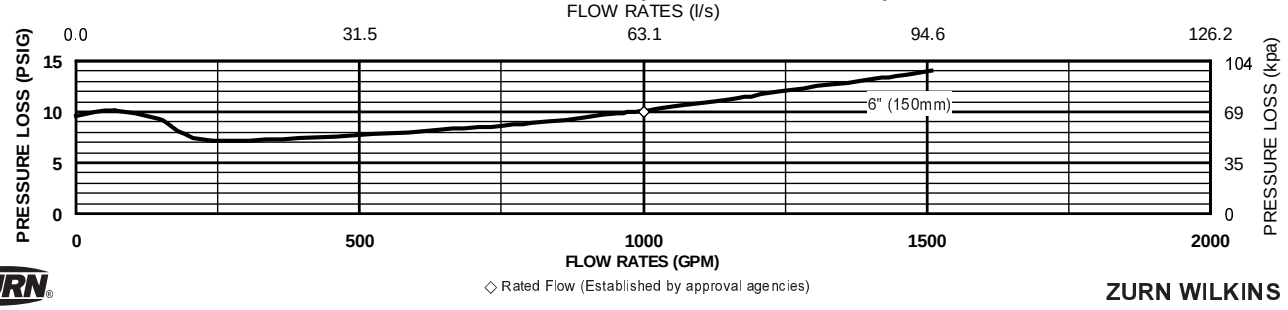

◇ Rated Flow (Established by approval agencies)