INSTALLATION, OPERATION, & MAINTENANCE MANUAL

BFMM RP4A SBF 1-2012

4ALF20A02 ✔



1/2" - 2"
Reduced Pressure Principle (RP) Backflow Preventer

Model RP4A
Model RPLF4A

"Apollo" Valves
manufactured in the USA
by CONBRACO Industries

APOLLO VALVES
5 YEAR WARRANTY
MADE IN USA

TABLE OF CONTENTS

Reduced Pressure Principle Backflow Preventer 1/2" – 2"

Section		Page
I	Description and Operation	3
II	Installation	3
III	Trouble Shooting Guide	5
IV	Maintenance Instructions	6-7
V	Testing Procedures	7-9

Parts List

Parts List (1/2"- 2") 10-12

Repair Kits

Repair Kits (1/2"- 2") 13-14

REDUCED PRESSURE PRINCIPLE BACKFLOW PREVENTER 1/2" – 2"

I. DESCRIPTION AND OPERATION

The Reduced Pressure Principle (RP) device consists of two independently-acting, spring-loaded check valves, together with a hydraulically dependent, mechanically independent pressure differential relief valve, located in the zone between the check valves. Two resilient seated shut-off valves and four test cocks complete the assembly.

The first check is designed to maintain a minimum of 5 psi across the check valve. The second check is designed to maintain a minimum of 1 psi across the check valve during normal operation. The relief valve operates on a differential pressure. Supply pressure on the upstream side of the first check valve acts against the diaphragm to close the relief valve during normal operation. In the event of back-pressure, the relief valve will open to maintain the pressure in the "zone" at least 2 psi less than the inlet pressure. The flowing and no flow conditions are illustrated in Figures 1 and 2. A minimum supply pressure of 20 psig is normally required to fully shut the relief valve and open both checks.

II. INSTALLATION

A. The RP must be installed in an accessible location to facilitate periodic field testing and maintenance.
B. The location selected should have adequate drainage for relief valve discharge. The device should never be placed where it may be submerged in standing water.
C. Flush all upstream piping thoroughly to remove foreign matter prior to installing the device.
D. The device must be installed in the horizontal position. A clearance between the lower most portion of the device and flood grade or floor should be provided for ease of maintenance.
E. When shut-off valves are provided separately, they should be installed with a test cock on the upstream side of the inlet shut-off valve.
F. After installing the assembly and with downstream or #2 shut-off valve closed, pressurize the device and bleed ALL air through test cock #4. Then open #2 shut-off valve.

Figure 1
(FLOWING CONDITION)

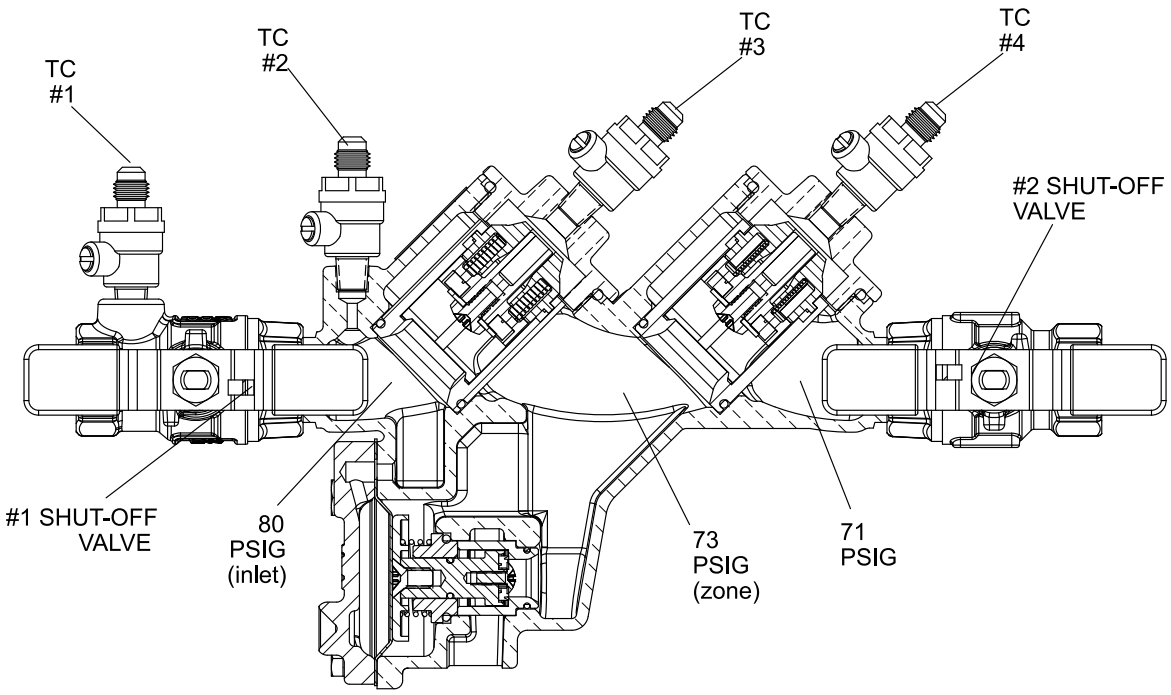

Figure 2
(NO FLOW CONDITION)

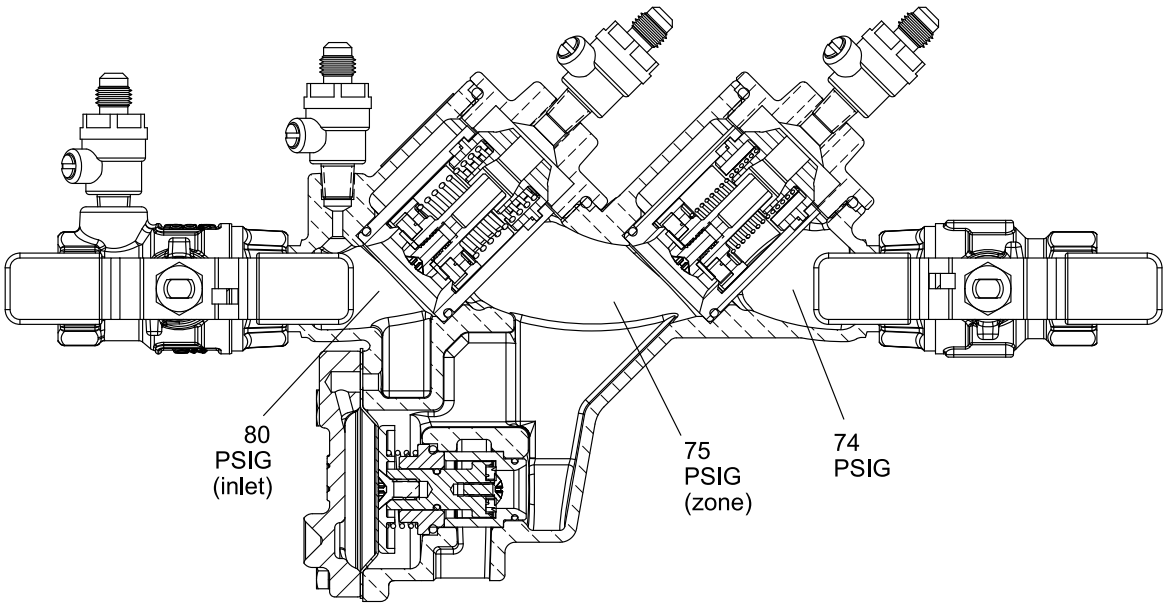

NOTE: Pressures shown are for illustrative purposes only and are not necessarily indicative of any actual valve.

III. TROUBLE SHOOTING

SYMPTOM	CAUSE	CORRECTIVE ACTION
1. Relief valve continuously discharges during no-flow condition.	a. #1 check valve fouled with debris. b. #2 check valve fouled with debris coupled with a backpressure condition. c. #1 check poppet stem not moving freely in guide (or #2 check poppet during a backpressure condition).	a. Inspect and clean seat disc and seat b. Inspect and clean seat disc and seat. c. Inspect for debris or deposit on poppet stem or guide.
2. Relief valve discharges continuously during flow and no-flow conditions.	a. Relief valve fouled with debris. b. Damaged diaphragm (allows water to pass through from inlet to zone). c. Sensing passage to inlet side of diaphragm plugged. d. #1 check poppet stem not moving freely in poppet guide.	a. Inspect and clean relief valve seat disc and seat. b. Replace diaphragm. c. Inspect and clean passage in cover and body. d. Inspect for debris or deposits on poppet stem or guide.
3. Relief valve discharges intermittently in a "spitting" action during no-flow condition.	a. Pressure fluctuations or water hammer from supply.	a. Eliminate or reduce supply pressure fluctuations.
4. Relief valve does not open during test No. 1.	a. #2 shut-off valve not closed completely. b. Test equipment improperly installed.	a. Close #2 shut-off valve or inspect for possible through leakage. b. Recheck test procedure.
5. #2 check valve fails to hold backpressure.	a. #2 shut-off valve not closed completely. b. #2 check valve fouled with debris. c. #2 check poppet stem not moving freely in guide.	a. Close #2 shut-off valve or inspect for possible through leakage. b. Inspect and clean seat disc and seat. c. Inspect for debris or deposits on poppet stem or guide.
6. Pressure differential across #1 check valve is low during field test No. 3 (does not meet 5 PSID minimum).	a. #1 check valve fouled with debris. b. Upstream pressure fluctuations causing inaccurate gauge reading. c. #1 check poppet stem not moving freely in guide.	a. Inspect and clean seat disc and seat. b. Eliminate pressure fluctuations. c. Inspect for debris or deposits on poppet stem or guide.

IV. MAINTENANCE INSTRUCTIONS 1/2" – 2"

A. Disassembly - Check Valves

1. Close #2 shut-off valve, then close #1 shut-off valve.
2. Bleed pressure from the assembly by opening #2, #3, and #4 test cocks.
3. Unscrew cap using hex head provided.
4. Push down and turn the spring retainer 90 degrees to remove. Remove the spring. Remove the poppet from the check seat.
5. Normally, the check seat need not be removed. If removal is required, rock it back and forth while pulling outward.

B. Disassembly - Check Valve Poppet

CAUTION: Do not use pliers or other tools, which may damage or scratch the plastic stem.

1. Holding the poppet assembly in one hand, remove screw and retaining washer.
2. Remove the seat disc.
3. All parts should be carefully inspected for any damage or excessive wear and thoroughly rinsed in clean water prior to reassembly. Replace worn parts as necessary.

C. Assembly - Check Valve Poppet

1. Install new disc in poppet and secure with washer and screw.

D. Assembly - Check Valve

1. If the check seat was removed, install the new o-ring and lubricate with Apollo lubricant, DOW® 111 or equal. Line up the seat with the bore and push it firmly into place.
2. Place and center the poppet assembly in the check seat.
3. Install the spring onto the poppet.
4. Install the spring retainer onto the spring by pushing down into the grooves of the check seat and turning 90 degrees. Ensure spring retainer pops up about .1" and locks into the lugs. **CAUTION: Ensure the spring retainer orientation matches that in the parts list drawing or the device's flow will be significantly restricted.**
5. Apply a thin coat of Apollo lubricant, DOW® 111 or equal on cap o-ring.
6. Install cap.

E. Disassembly - Relief Valve

1. Remove cover bolts, cover, and diaphragm.
2. Grasp the diaphragm plate and pull the assembly straight out of the body.
3. Holding the relief valve assembly in one hand, remove the screw (and retaining washer on 1-1/4", 1-1/2", & 2" models only).
4. Remove the seat disc. (Items 5 through 7 are not normally required.)
5. Turn the assembly over, keeping the spring compressed by holding down on the diaphragm plate, remove the screw.
6. Remove the diaphragm plate, spring, and bushing from the RV stem. Note the orientation of the bushing with respect to the spring.
7. Remove the o-ring from the RV stem.
8. Normally, the RV seat need not be removed. If removal is required, rock it back and forth while pulling outward.
9. All parts should be carefully inspected for any damage or excessive wear and thoroughly rinsed in clean water prior to reassembly. Replace worn parts as necessary.

F. Assembly - Relief Valve

1. Apply a thin coat of Apollo lubricant, DOW® 111 or equal on o-rings before installing.
2. Install o-ring on RV seat. Line up the seat with the bore and push firmly into place.
3. If the RV stem has been disassembled, install o-ring onto RV stem.
4. Slide bushing over RV stem and position spring onto bushing. Note the correct position of the bushing from step #6 in disassembly instructions. (Spring must fit over the smaller shoulder of the bushing upon reassembly.)
5. Position diaphragm plate and compress spring, install screw into RV stem.
6. Turn the assembly over and install seat disc (and retaining washer on 1-1/4", 1-1/2", & 2" models only), and screw.
7. Install o-ring onto bushing.
8. Slide complete assembly onto the body.
9. Position diaphragm over flange, install cover, and tighten bolts evenly.
10. Open #1 shut-off valve and bleed air out of the unit through #2, #3, and #4 test cocks; then open #2 shut-off valve.
11. Test complete assembly to ensure proper operation.

V. TESTING PROCEDURES

***NOTE:* This is a 3 valve test kit procedure and may or may not be approved in all jurisdictions. Consult your local water purveyor for acceptable test procedures.**

Test Setup

1. Notify customer water will be off; inspect device for leaks, verify the make, model, and serial number.
2. Flush test cocks, in order (4-1-2-3), (open #2 test cock very slowly to prevent accidental opening of the relief valve), then install appropriate adapters (if necessary)
3. Close valves "A", "B", & "C" on test kit and close the #2 shut-off valve.
4. Connect high side hose to test cock #2, and low hose to test cock #3.
5. Slowly open test cock #3, then open vent "C" valve and low "B" valve. This will bleed air from low side of gauge. Slowly open test cock #2, then open high "A" valve. This will bleed air from high side of gauge. Close valve "A", then valve "B", then valve "C".
6. Observe this apparent differential pressure for check valve #1; this value must be at least 5.0 psi or greater.

TEST NO. 1

PURPOSE: To test check valve #2 against back pressure.

1. Connect the vent "C" hose to test cock #4.
2. Slowly open the high "A" and vent "C" valves and keep the low "B" closed.
3. Open test cock #4.
4. Gauge may decrease slightly due to disc compression. If pressure differential continues to decrease until the vent opens, then check valve #2 is reported as leaking.

TEST NO. 2

PURPOSE: To test shut-off valve #2 for tightness.

1. After passing test No. 1, continue to test No. 2 by closing test cock #2.
2. The indicated pressure differential will decrease slightly. If pressure differential continues to decrease (approaching zero) the No. 2 shut-off valve is reported to be leaking.

TEST NO. 3

PURPOSE: To test check valve #1 for tightness.

1. Close high "A" valve and open test cock #2.
2. Close test cock #4.
3. Open low valve "B", this will bleed air from low side of gauge, then closing valve "B" restores the system to a normal static condition.
4. Observe the pressure differential gauge; this value must be a least 5.0 psi or greater. Record this value for check valve #1 on the backflow test report form.

TEST NO. 4

PURPOSE: To test operation of the Differential Pressure Relief Valve.

The Pressure Differential Relief Valve must operate to maintain the "zone" between the two check valves at least 2 psi less than supply pressure.

1. Close vent "C" valve.
2. Open the high "A" valve.
3. Slowly open the low "B" valve no more than one turn.
4. Hold the valve at this position and observe the gauge reading at the first moment the first discharge is noted from the relief valve.
5. Record this as the opening differential pressure of the relief valve on the test report form.

TEST NO. 5

PURPOSE: To do a differential pressure test on check valve #2.

1. After completing test No. 4, close test cock #2, then close test cock #3.
2. Close valves "A", "B", and "C" on test kit.
3. Move low hose "B" to test cock #4, then move high hose "A" to test cock #3.
4. Slowly open test cock #4, then open vent "C" valve and low "B" valve. This will bleed air from low side of gauge.
5. Slowly open test cock #3, then open high "A" valve. This will bleed air from high side of gauge.
6. Close valve "A", then "B", then "C".
7. Observe the pressure differential gauge, this value must be at least 1.0 psi or greater.
8. Record this value for check valve #2 on the backflow test report form.

END OF TESTING

Make sure all test cocks are closed. Remove hoses and fittings. Slowly open shut-off valve #2 to restore water supply to the customer.

Figure 3

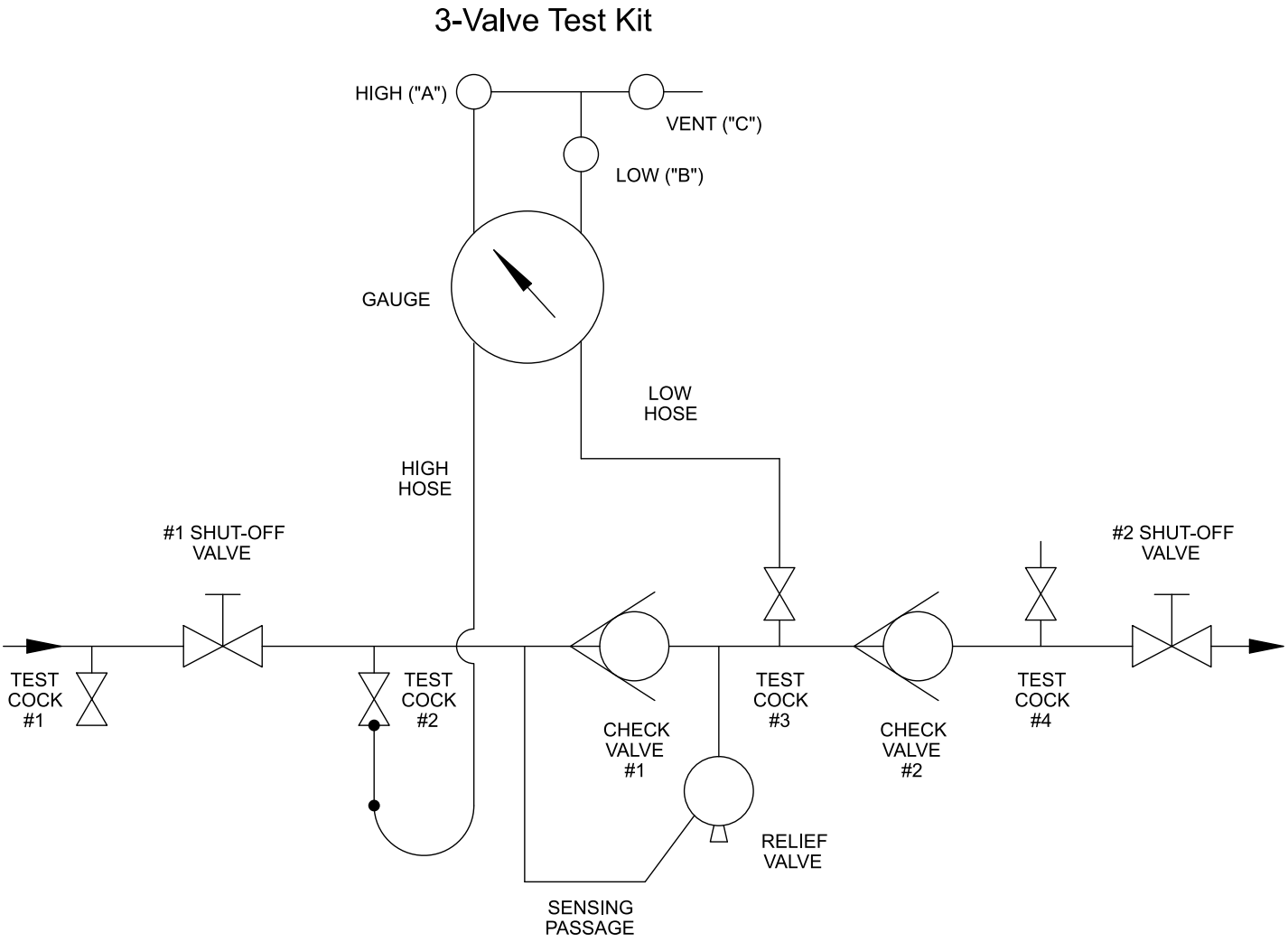
3-Valve Test Kit
HIGH ("A")
VENT ("C")
LOW ("B")
GAUGE
LOW HOSE
HIGH HOSE
#1 SHUT-OFF VALVE
#2 SHUT-OFF VALVE
TEST COCK #1
TEST COCK #2
CHECK VALVE #1
TEST COCK #3
CHECK VALVE #2
TEST COCK #4
RELIEF VALVE
SENSING PASSAGE

PARTS LIST 1/2" - 2"

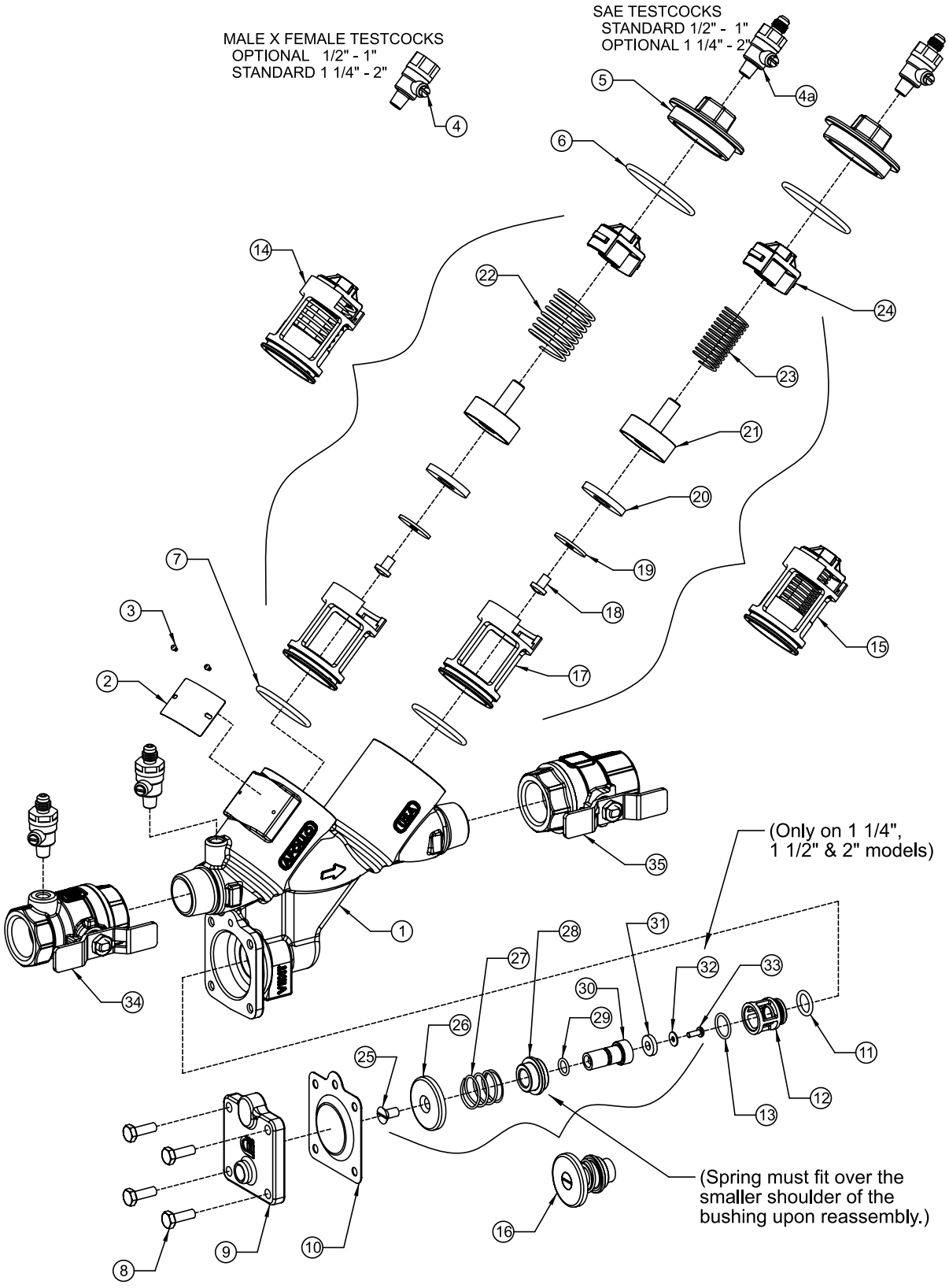

Figure 4

RP4A and RPLF4A Parts List

Item #	Description	Std. or LF	Qty.	Part Number					
				1/2″	3/4″	1″	1-1/4″	1-1/2″	2″
1	Body	All	1	Consult Factory					
2	Label Plate	All	1	Consult Factory					
3	Label Plate Tacks	All	2	I-2614-00					
4	Test Cock M x F (81 metal)	Std	4	78-290-01 (Optional)			78-291-01 (Standard)		
	Test Cock M x F (Lead Free)	LF		78LF-290-01 (Optional)			78LF-291-01 (Standard)		
4a	Test Cock SAE (81 metal)	Std		78-292-01 (Standard)			78-293-01 (Optional)		
	Test Cock SAE (Lead Free)	LF		78LF-292-01 (Standard)			78LF-293-01 (Optional)		
5	Cap (81 metal)	Std	2	F-3846-05	F-3822-05	F-3848-05	F-3850-05		F-3854-05
	Cap (Lead Free)	LF		F-3847-05	F-3823-05	F-3849-05	F-3851-05		F-3855-05
6	Cap O-Ring	All	2	D-4881-00	D-4812-00	D-4884-00	D-4885-00		D-4888-00
7	Check Module O-Ring	All	2	D-4880-00	D-4744-00	D-4882-00	D-4884-00		D-4885-00
8	RV Cover Bolts	All	(QTY)	B-1793-00 (4)			B-1751-00 (6)		B-1751-00 (7)
9	RV Cover (81 metal)	Std	1	F-3890-05			F-3894-05		F-3892-05
	RV Cover (Lead Free)	LF		F-3891-05			F-3895-05		F-3893-05
10	RV Diaphragm	All	1	D-2632-00			D-2505-00		D-4909-00
11	RV Seat O-Ring	All	1	D-4892-00			D-4910-00		D-4903-00
12	RV Seat	All	1	L-7894-00			L-8038-00		L-8039-00
13	RV Bushing Face O-Ring	All	1	D-4893-00			D-4744-00		D-4904-00
14	1st Chk S-Assy (see below)	All	1	W-9207-05	W-9208-05	W-9209-05	W-9210-05		W-9211-05
15	2nd Chk S-Assy (see below)	All	1	W-9075-05	W-9003-05	W-9074-05	W-9159-05		W-9204-05
16	RV S-Assy (81) (see below)	Std	1	W-9223-05			W-9244-05		W-9245-05
	RV S-Assy (LF) (see below)	LF		W-9586-05			W-9587-05		W-9588-05

Individual parts are only available for bulk sales. Please refer to the appropriate repair kits on pages 13-14.

Check Module Sub-Assembly Parts LIst

Item #	Description	Std. or LF	Qty.	Part Number					
				1/2″	3/4″	1″	1-1/4″	1-1/2″	2″
17	Check Seat	All	1	L-7815-00	L-7727-00	L-7813-00	L-7979-00		L-7983-00
18	Screw	All	1	B-3279-00	B-1750-00				
19	Disc Retaining Washer	All	1	E-2372-00	E-2841-00	E-2933-00	E-2860-00		E-2876-00
20	Seat Disc	All	1	D-4771-00	D-4743-00	D-4770-00	D-4853-00		D-4873-00
21	Poppet	All	1	K-4491-00	K-4471-00	K-4483-00	K-4511-00		K-4512-00
22	Spring 1st Check	All	1	A-2514-00	A-2515-00	A-2516-00	A-2517-00		A-2518-00
23	Spring 2nd Check			A-2505-00	A-2503-00	A-2510-00	A-2511-00		A-2512-00
24	Spring Retainer	All	1	L-7814-00	L-7726-00	L-7812-00	L-7980-00		L-7984-00

Individual parts are only available for bulk sales. Please refer to the appropriate repair kits on pages 13-14.

Relief Valve Module Sub-Assembly Parts LIst

Item #	Description	Std. or LF	Qty.	Part Number					
				1/2″	3/4″	1″	1-1/4″	1-1/2″	2″
25	RV Diaphragm Plate Screw	All	1	B-1749-00					B-1750-00
26	RV Diaphragm Plate	All	1	E-2222-00			D-2506-00		E-2891-00
27	RV Spring	All	1	A-2542-00			A-2543-00		A-2519-00
28	RV Bushing (Standard)	Std	1	I-8976-00			I-9053-00		I-9054-00
	RV Bushing (Lead Free)	LF		I-9225-00			I-9226-00		I-9277-00
29	RV Stem O-Ring	All	1	D-4891-00			D-4927-00		D-4902-00
30	RV Stem	All	1	G-4791-00			G-3212-00		G-4816-00
31	RV Seat Disc	All	1	D-4833-00			D-4911-00		D-4912-00
32	RV Seat Disc Washer	All	1	NONE			E-2280-00		E-2890-00
33	RV Seat Disc Screw	All	1	B-3254-00			B-3280-00		B-1750-00

Individual parts are only available for bulk sales. Please refer to the appropriate repair kits on pages 13-14.

Inlet and Outlet Shut-Off Valves

Item #	Description	Std. or LF	Qty.	Part Number					
				1/2″	3/4″	1″	1-1/4″	1-1/2″	2″
34	T2 Inlet NPT Ball Valve w/ "T" Handle (Standard)	81 Mtl	1	77B-103-85	77B-104-83	77B-105-83	Not Available		
		LF		77BLF-103-85	77BLF-104-83	77BLF-105-83			
	T4 Inlet Union Ball Valve w/ "T" Handle (Option)	81 Mtl		77B-303-85	77B-304-83	77B-305-83	Not Available		
		LF		77BLF-303-85	77BLF-304-83	77BLF-305-83			
	T2 Inlet NPT Ball Valve w/ Lever Handle (Standard)	81 Mtl		Not Available			77B-106-84	77B-107-84	77B-108-84
		LF					77BLF-106-84	77BLF-107-84	77BLF-108-84
	T4 Inlet Union Ball Valve with Lever Handle (Option)	81 Mtl		Not Available			77B-306-84	77B-307-84	77B-308-84
		LF					77BLF-306-84	77BLF-307-84	77BLF-308-84
	T2 Inlet NPT Ball Valve with Locking "T" Handle (Option)	81 Mtl		Not Available	77B-104-91	77B-105-91	Not Available		
		LF			77BLF-104-91	77BLF-105-91			
	T4 Inlet Union Ball Valve with Locking "T" Handle (Option)	81 Mtl			77B-304-91	77B-305-91	Not Available		
		LF			77BLF-304-91	77BLF-305-91			
	T2 Inlet NPT Ball Valve with Locking Lever Handle (Option)	81 Mtl		Not Available			77B-106-86	77B-107-86	77B-108-86
		LF					77BLF-106-86	77BLF-107-86	77BLF-108-86
	T4 Inlet Ball Union Valve with Locking Lever Handle (Option)	81 Mtl		Not Available			77B-306-86	77B-307-86	77B-308-86
		LF					77BLF-306-86	77BLF-307-86	77BLF-308-86
35	T2 Outlet NPT Ball Valve with "T" Handle (Standard)	81 Mtl	1	77C-103-A4	77C-104-83	77C-105-83	Not Available		
		LF		77CLF-103-85	77CLF-104-83	77CLF-105-83			
	T4 Outlet Union Ball Valve with "T" Handle (Option)	81 Mtl		77C-303-85	77C-304-83	77C-305-83	Not Available		
		LF		77CLF-303-85	77CLF-304-83	77C-305-83			
	T2 Outlet NPT Ball Valve with Lever Handle (Standard)	81 Mtl		Not Available			77C-106-84	77C-107-84	77C-108-84
		LF					77CLF-106-84	77CLF-107-84	77CLF-108-84
	T4 Outlet Union Ball Valve with Lever Handle (Option)	81 Mtl		Not Available			77C-306-84	77C-307-84	77C-308-84
		LF					77CLF-306-84	77CLF-307-84	77CLF-308-84
	T2 Outlet NPT Ball Valve with Locking "T" Handle (Option)	81 Mtl		Not Available	77C-104-91	77C-105-91	Not Available		
		LF			77CLF-104-91	77CLF-105-91			
	T4 Outlet Union Ball Valve with Locking "T" Handle (Option)	81 Mtl			77C-304-91	77C-305-91	Not Available		
		LF			77CLF-304-91	77CLF-305-91			
	T2 Outlet NPT Ball Valve with Locking Lever Handle (Option)	81 Mtl		Not Available			77C-106-86	77C-107-86	77C-108-86
		LF					77CLF-106-86	77CLF-107-86	77CLF-108-86
	T4 Outlet Union Ball Valve with Locking Lever Handle (Option)	81 Mtl		Not Available			77C-306-86	77C-307-86	77C-308-86
		LF					77CLF-306-86	77CLF-307-86	77CLF-308-86

Replacement Handles for Ball Valve Shut-Off Valves (T2 & T4 options)

"T" Handle	All	W-9732-00	W-9864-00	W-9734-00
Lever Handle		Not Available		W-9366-00
Locking "T"		Not Available	W-2394-00	Not Available
Locking Lever		Not Available		W-9686-00

Stainless steel handles are standard on all Apollo® backflow devices.

REPAIR KITS RP4A & RPLF4A 1/2" – 2"

Check Module Rubber Kit (One kit repairs one check) (Universal, for standard & lead free valves)		QTY	Size				
			1/2"	3/4"	1"	1-1/4" – 1-1/2"	2"
	Repair Kit Model Number		**RK4A12CMR**	**RK4A34CMR**	**RK4A1CMR**	**RK4A112CMR**	**RK4A2CMR**
Item #	Ordering Number		4A-003-01	4A-004-01	4A-005-01	4A-007-01	4A-008-01
not Shown	O-Ring Lubricant		I-9016-00				
11	Check Module Seat Disc	2	D-4771-00	D-4743-00	D-4770-00	D-4853-00	D-4873-00
7	Check Module O-Ring	2	D-4880-00	D-4744-00	D-4882-00	D-4884-00	D-4885-00
6	Cap O-Ring	2	D-4881-00	D-4812-00	D-4884-00	D-4885-00	D-4888-00

RP First Check Complete Kit (One kit repairs one check) (Universal, for standard & lead free valves)		QTY	Size				
			1/2"	3/4"	1"	1-1/4" – 1-1/2"	2"
	Repair Kit Model Number		**RK4A12RPCMC**	**RK4A34RPCMC**	**RK4A1RPCMC**	**RK4A112RPCMC**	**RK4A2RPCMC**
Item #	Ordering Number		4A-003-03	4A-004-03	4A-005-03	4A-007-03	4A-008-03
not Shown	O-Ring Lubricant		I-9016-00				
14	Check Module S-Assy	1	W-9207-05	W-9208-05	W-9209-05	W-9210-05	W-9211-05
7	Check Module O-Ring	1	D-4880-00	D-4744-00	D-4882-00	D-4884-00	D-4885-00
6	Cap O-Ring	1	D-4881-00	D-4812-00	D-4884-00	D-4885-00	D-4888-00

RP Second Check Complete Kit (One kit repairs one check) (Universal, for standard & lead free valves)		QTY	Size				
			1/2"	3/4"	1"	1-1/4" – 1-1/2"	2"
	Repair Kit Model Number		**RK4A12CMC**	**RK4A34CMC**	**RK4A1CMC**	**RK4A112CMC**	**RK4A2CMC**
Item #	Ordering Number		4A-003-02	4A-004-02	4A-005-02	4A-007-02	4A-008-02
not Shown	O-Ring Lubricant		I-9016-00				
15	Check Module S-Assy	1	W-9075-05	W-9003-05	W-9074-05	W-9159-05	W-9204-05
7	Check Module O-Ring	1	D-4880-00	D-4744-00	D-4882-00	D-4884-00	D-4885-00
6	Cap O-Ring (for DC/RP)	1	D-4881-00	D-4812-00	D-4884-00	D-4885-00	D-4888-00
extra part(s)	Bonnet O-Ring (for PVB)	1	D-4812-00	D-4883-00	D-4887-00	D-4858-00	

RP Relief Valve Rubber Kit (Universal, for standard & lead free valves)		QTY	Size				
			1/2"	3/4"	1"	1-1/4" – 1-1/2"	2"
	Repair Kit Model Number		**RK4A1RVR**			**RK4A112RVR**	**RK4A2RVR**
Item #	Ordering Number		4A-005-04			4A-007-04	4A-008-04
not Shown	O-Ring Lubricant		I-9016-00				
10	RV Diaphragm	1	D-2632-00			D-2505-00	D-4909-00
13	RV Bushing Face O-Ring	1	D-4893-00			D-4744-00	D-4904-00
11	RV Seat O-Ring	1	D-4892-00			D-4910-00	D-4903-00
29	RV Stem O-Ring	1	D4891-00			D-4927-00	D-4902-00
31	RV Seat Disc	1	D-4833-00			D-4911-00	D-4912-00

Repair Kits RP4A & RPLF4A 1/2" – 2" (continued)

RP Relief Valve Complete Kit (Universal, for standard & lead free valves)		QTY	Size				
			1/2"	3/4"	1"	1-1/4" – 1-1/2"	2"
	Repair Kit Model Number		RK4A1RVC			RK4A112RVC	RK4A2RVC
Item #	Ordering Number		4A-005-05			4A-007-05	4A-008-05
not Shown	O-Ring Lubricant		I-9016-00				
10	RV Diaphragm	1	D-2632-00			D-2505-00	D-4909-00
13	RV Bushing Face O-Ring	1	D-4893-00			D-4744-00	D-4904-00
11	RV Seat O-Ring	1	D-4892-00			D-4910-00	D-4903-00
16	RV S-Assy	1	W-9586-05			W-9587-05	W-9588-05
12	RV Seat	1	L-7894-00			L-8038-00	L-8039-00

RP Total Rubber Kit (Replace all rubber parts in ONE RP valve) (Universal, for standard & lead free valves)		QTY	Size				
			1/2"	3/4"	1"	1-1/4" – 1-1/2"	2"
	Repair Kit Model Number		RK4A12RPR	RK4A34RPR	RK4A1RPR	RK4A112RPR	RK4A2RPR
Item #	Ordering Number		4A-003-09	4A-004-09	4A-005-09	4A-007-09	4A-008-09
not Shown	O-Ring Lubricant		I-9016-00				
20	Check Module Seat Disc	2	D-4771-00	D-4743-00	D-4770-00	D-4853-00	D-4873-00
7	Check Module O-Ring	2	D-4880-00	D-4744-00	D-4882-00	D-4884-00	D-4885-00
6	Cap O-Ring	2	D-4881-00	D-4812-00	D-4884-00	D-4885-00	D-4888-00
10	RV Diaphragm	1	D-2632-00			D-2505-00	D-4909-00
13	RV Bushing Face O-Ring	1	D-4893-00			D-4744-00	D-4904-00
11	RV Seat O-Ring	1	D-4892-00			D-4910-00	D-4903-00
29	RV Stem O-Ring	1	D-4891-00			D-4927-00	D-4902-00
31	RV Seat Disc	1	D-4833-00			D-4911-00	D-4912-00

RP Complete Internals Kit (One kit repairs ONE RP valve) (Universal, for standard & lead free valves)		QTY	Size				
			1/2"	3/4"	1"	1-1/4" – 1-1/2"	2"
	Repair Kit Model Number		RK4A12TRP	RK4A34TRP	RK4A1TRP	RK4A112TRP	RK4A2TRP
Item #	Ordering Number		4A-003-10	4A-004-10	4A-005-10	4A-007-10	4A-008-10
not Shown	O-Ring Lubricant		I-9016-00				
14	1st Check Module S-Assy	1	W-9207-05	W-9208-05	W-9209-05	W-9210-05	W-9211-05
15	2nd Check Module S-Assy	1	W-9075-05	W-9003-05	W-9074-05	W-9159-05	W-9204-05
7	Check Module O-Ring	2	D-4880-00	D-4744-00	D-4882-00	D-4884-00	D-4885-00
6	Cap O-Ring	2	D-4881-00	D-4812-00	D-4884-00	D-4885-00	D-4888-00
10	RV Diaphragm	1	D-2632-00			D-2505-00	D-4909-00
13	RV Bushing Face O-Ring	1	D-4893-00			D-4744-00	D-4904-00
11	RV Seat O-Ring	1	D-4892-00			D-4910-00	D-4903-00
16	RV S-Assy	1	W-9586-05			W-9587-05	W-9588-05
12	RV Seat	1	L-7894-00			L-8038-00	L-8039-00

"Apollo" Valves
manufactured in the USA

SALES & CUSTOMER SERVICE:

Phone: (704) 841-6000
Fax: (704) 841-6020
www.apollovalves.com

	AGENCY	AREAS COVERED	EMAIL	PHONE	FAX
SOUTHEAST REGION	Mid South Marketing, Inc.	VA/MD/Washington, D.C./WV-East	midsouth7@aol.com	804-213-3801	804-213-3802
	Pro Marketing, Inc.	NC/SC/TN-East	sales@promarketinginc.net	864-578-4334	864-578-4889
	Spirit Group	FL (except Panhandle)	info@spiritgroupinc.com	407-291-6035	407-299-0378
	Tim Morales & Associates, Inc.	AL/FL Panhandle	sales@timmorales.com	251-602-8333	251-602-8339
	White Wolf Group	GA	info@whitewolfgroupinc.com	800-401-4870	888-908-9372
SOUTHERN REGION	BWC Inc.	LA (Commercial Products)	chuck@bwcassoc.com	504-734-0229	504-734-3711
	Marathon Flow Control	TX, OK, KS except Northeast, LA (Industrial)	sales@marathonflowcontrol.com	214-201-0100	214-201-0104
	Southern Marketing Group	MS/TN-West/AR/Bowie Cty.-TX	SMG49@bellsouth.net	901-547-0042	901-547-0035
MIDWESTERN REGION	FourMation Sales	MN/ND/SD/WI-West	ryan@fourmationsales.com	763-420-6900	763-420-6993
	Marshall-Rodeno Heartland	NE/IA (Except River Counties)	trodeno@marshallrodeno.com	303-575-6701	303-575-6706
	Midwest Spec	KY/OH/PA-West/WV-West	glsales@mwspec.com	330-538-0406	330-538-0410
	New Tech Marketing	Northern-IL/WI-East/IN/MI-UP/IA-River Counties	sales@new-techmarketing.com	630-378-4300	630-378-0343
	New Tech Marketing	MO/Southern IL/Northeast Kansas	ntm112@aol.com	618-394-0329	618-394-0427
	V.E. Sales Co., Inc.	MI (Except Upper Peninsula)	tomv@vesalesinc.com	586-774-7760	586-774-1490
WESTERN REGION	Elmco Duddy	CA - South	tduddy@elmcoduddy.com	626-333-9942	626-855-4811
	Gordon & Associates	WA, OR, AK, Northern counties ID	laura@gordonandassoc.com	360-566-1470	360-566-1478
	HC Fletcher	CA - North (AB 1953 compliant product)	apollosales@hcfletcher.com	800-432-7047	949-660-9072
	Marshall-Rodeno Associated	CO/WY/MT/ID-SE/UT/NV-NE/NM/El Paso-TX	trodeno@marshallrodeno.com	303-575-6701	303-575-6706
	Romatec	CA - North PVF (non AB 1953)	apollo@romatec.com	877-530-3530	661-588-3534
	Southwest Valves	CA (Waterworks and Fire Protection)	d.burell@southwestvalve.com	559-261-2703	559-261-2711
	Southwestern Industrial Sales Co.	AZ/Nevada-SW	eduardop@sw-ind.com	480-458-5838	480-458-5843
	Spec Management Group	HI	msmarch4@cox.net	949-481-4225	949-487-0990
NORTHEAST REGION	Conroy & Griese Sales, Inc.	NY-East/NJ-North	iezzi52@aol.com	856-663-4440	856-663-6644
	Keith Engle & Associates	OEM accounts	keith.engle@verizon.net	610-827-9560	610-827-9561
	Layden Company	NY-Upstate/PA-East/DE/NJ-South	joejr@laydencompany.com	610-363-6657	877-529-3361
	Urell, Inc.	MA/New England States	conbraco@urell.com	617-923-9500	617-926-9414
IRRIGATION ONLY REPS	Active Sales Northwest, Inc.	OR, WA, Western ID	skactive@aol.com	541-726-0320	541-726-1148
	Biz Sales Company	OH, KY, MI, IN, parts of PA, WV, WI	dzavelson@bizpvf.com	216-595-2888	216-595-2899
	Fourmation Sales	MN/ND/SD/WI-West	dean@fourmationsales.com	763-262-4700	763-262-4740
	Hall Marketing	AL, LA	hallmarketing@bellsouth.net	228-547-4637	228-832-6666
	J&J Midwest Sales	NE, IA, MO, KS	john@jandjmidwestsales.com	314-422-8419	
	Jim Benton & Associates	AL, FL Panhandle	jim@bentonandassoc.com	205-664-1221	205-664-1277
	John Hart	FL	jhart@lascofittings.com	772-595-7773	772-489-4305
	Larry Perkins	TX - Southern	lperkins@lascofittings.com	936-443-1096	
	Marel Enterprises	New England, NY, DE, MD, VA, DC, parts of PA & WV	marelenterprise@gmail.com	631-271-1718	631-427-8558
	Marshall-Rodeno Associated	CO/WY/MT/ID-SE/UT/NV-NE	trodeno@marshallrodeno.com	303-575-6701	303-575-6706
	NSC Marketing Group Inc.	OK	nsc_tulsa@sbcglobal.net	918-627-5340	918-664-1408
	Pro Marketing, Inc.	NC/SC/TN-East	sales@promarketinginc.net	864-578-4334	864-578-4889
	Sherman Dobbs	TX - Northern	sdobbs@lascofittings.com	469-442-8510	972-417-9733
	Southern Marketing Group	MS/TN-West/AR/Bowie Cty.-TX	SMG49@bellsouth.net	901-547-0042	901-547-0035
	Spec Management Group	CA-South	msmarch4@cox.net	949-481-4225	949-487-0990
	VPC Sales	AZ	chudson@vpcsales.com	661-257-3923	661-257-3928
CANADA	Agences J. Pierre Sylvain, Inc.	Quebec	agencespsylvain@golden.net	450-655-9588	450-641-2737
	Barclay Sales Ltd.	British Columbia	bbarclay@barclaysales.com	604-945-1010	604-945-3030
	Conbraco Industries, Canada	178 Pennsylvania Ave., Unit 1, Concord, Ontario L4K 4B1	conbraco.canada@conbraco.com	905-761-6161	905-761-6666
	D & M Mechanical Sales	Ontario/East	don@dandmsales.ca	613-384-7084	613-384-3407
	Dynamic Agencies, Ltd.	Saskatchewan	doug.dynamicage@sasktel.net	306-343-1901	306-343-1901
	J. Levandier Sales, Inc.	Nova Scotia, New Brunswick, Prince Edward Island & Newfoundland	service@jlevandiersales	506-858-1615	506-858-1084
	Kern Industries, Ltd.	Alberta-North	kernind@telusplanet.net	780-451-2056	780-454-6687
	Kern Industries Calgary, Ltd.	Alberta-South	marty.yucytus@kernindustries.ca	403-730-7791	403-239-8179
	Key to the North Sales Agency, Inc.	Ontario-North	hmehes@keytothenorth.ca	705-524-6714	705-566-0148
	Task Controls, Inc.	Ontario	infotoronto@taskcontrols.com	416-291-3004	416-754-3481
	Tom Beggs Agencies Ltd.	Manitoba/NW Ontario	tba@mts.net	204-953-1900	204-774-6915

SALES & CUSTOMER SERVICE:
Phone: (704) 841-6000 Fax: (704) 841-6020
www.apollovalves.com

TERMS AND CONDITION OF SALE

- Payment: 2% 10th prox. Net 30 days.
- All prices F.O.B. shipping point with freight allowed on shipments of 750 pounds and/or $5,000 net minimum to all shipping points within the United States excluding Alaska and Hawaii. No freight allowed on Air Freight or Parcel Post shipments. Claims for shortages must be made within 10 days of receipt of material. Our responsibility ends when a receipt is furnished us by the carrier.
- No Invoice Rendered For Less Than $50.00.
- No freight will be allowed on Air Freight, Air Express, Parcel Post or U.P.S. shipments.
- All Conbraco products may be combined to make sufficient weight for full freight allowance.
- Phone order quoted prices are subject to correction. Prices and designs are subject to change without notice.
- Orders for material or special design or specification are made to customer's order and are not subject to cancellation or return.
- All goods returned to us will not be accepted unless a full explanation has been made and our written authorized permission obtained in advance. All goods returned – if accepted – will be credited at invoice price, less 30% for service and rehandling charges, plus shipping expenses.
- We reserve the right to adjust orders to box quantities.

WARRANTY AND LIMITATIONS OF LIABILITY

Conbraco Industries, Inc. warrants, to its initial purchaser only, that its products which are delivered to this initial purchaser will be of the kind described in the order or price list and will be free of defects in workmanship or material for a period of FIVE years from the date of delivery to you, our initial purchaser. This warranty applies to Apollo brand product with "Made in the USA" markings only.

Should any failure to conform to this warranty appear within **FIVE** years after the date of the initial delivery to our initial purchaser, Conbraco will, upon written notification thereof and substantiation that the goods have been stored, installed, maintained and operated in accordance with Conbraco's recommendations and standard industry practice, correct such defects by suitable repair or replacement at Conbraco's own expense.

APOLLO INTERNATIONAL PRODUCTS: Conbraco Industries, Inc. warrants its International products, to its initial purchaser only, that its international products which are delivered to this initial purchaser will be of the kind described in the order or price list and will be free of defects in workmanship or material for a period of **TWO** years from the date of delivery to you, our initial purchaser.

THIS WARRANTY IS EXCLUSIVE AND IS IN LIEU OF ANY IMPLIED WARRANTY OF MERCHANTABILITY, FITNESS FOR A PARTICULAR PURPOSE OR OTHER WARRANTY OF QUALITY, WHETHER EXPRESSED OR IMPLIED, EXCEPT THE WARRANTY OF TITLE AND AGAINST PATENT INFRINGEMENT. Correction of non-conformities, in the manner and for the period of time provided above, shall constitute fulfillment of all liabilities of Conbraco to our initial purchaser, with respect to the goods, whether based on contract, negligence, strict tort or otherwise. It is the intention of Conbraco Industries, Inc. that no warranty of any kind, whether expressed or implied shall pass through our initial purchaser to any other person or corporation.

LIMITATION OF LIABILITY: Conbraco Industries, inc. SHALL NOT UNDER ANY CIRCUMSTANCES BE LIABLE FOR SPECIAL OR CONSEQUENTIAL DAMAGES SUCH AS, BUT NOT LIMITED TO, DAMAGES OR TO LOSS OF OTHER PROPERTY OR EQUIPMENT, LOSS OF PROFITS OR REVENUE, COST OF CAPITAL, COST OF PURCHASED OR REPLACEMENT GOODS, OR CLAIMS OF CUSTOMERS OF OUR INITIAL PURCHASER. THE REMEDIES OF OUR INITIAL PURCHASER, AND ALL OTHERS, SET FORTH HEREIN, ARE EXCLUSIVE, AND THE LIABILITY OF CONBRACO WITH RESPECT TO SAME SHALL NOT, EXCEPT AS EXPRESSLY PROVIDED HEREIN, EXCEED THE PRICE OF THE GOODS UPON WHICH SUCH LIABILITY IS BASED.

* It is the end user's responsibility to confirm that items intended for use satisfy local codes and standards.