INSTALLATION INSTRUCTIONS

American Standard
Style That Works Better

BOULEVARD® Dual Flush One-Piece Toilet
Model 2891-Elongated Right Height® with Seat

Thank you for selecting American Standard – the benchmark of fine quality for over 100 years. To ensure this product is installed properly, please read these instructions carefully before you begin. (Certain installations may require professional help.) Also be sure your installation conforms to local codes.

⚠ CAUTION: PRODUCT IS FRAGILE. TO AVOID BREAKAGE AND POSSIBLE INJURY HANDLE WITH CARE!
NOTE: *Pictures may not exactly define contour of china and components.*

2891128020

RECOMMENDED TOOLS AND MATERIALS

Regular Screwdriver	Adjustable Wrench	Putty Knife	Sealant	Carpenters Level
Wax Ring/Gasket	Flexible Supply Tube	Closet Bolts	Hacksaw	Tape Measure

1 REMOVE OLD TOILET

a. Close toilet supply valve and flush tank completely. Towel or sponge remaining water from tank and bowl.

b. Disconnect and remove supply line.
NOTE: *If replacing valve, first shut off main water supply!*

c. Remove old mounting hardware, remove toilet and plug floor waste opening to prevent escaping sewer gases.

d. Remove closet bolts from flange and clean away old wax, putty, etc. from base area.

NOTE: *Mounting surface must be clean and level **before** new toilet is installed!*

2 ROUGHING-IN DIMENSIONS:

NOTE: *Distance from wall to closet flange centerline must be as listed below:*

Model 2891-BOULEVARD DUAL FLUSH ONE PIECE TOILET

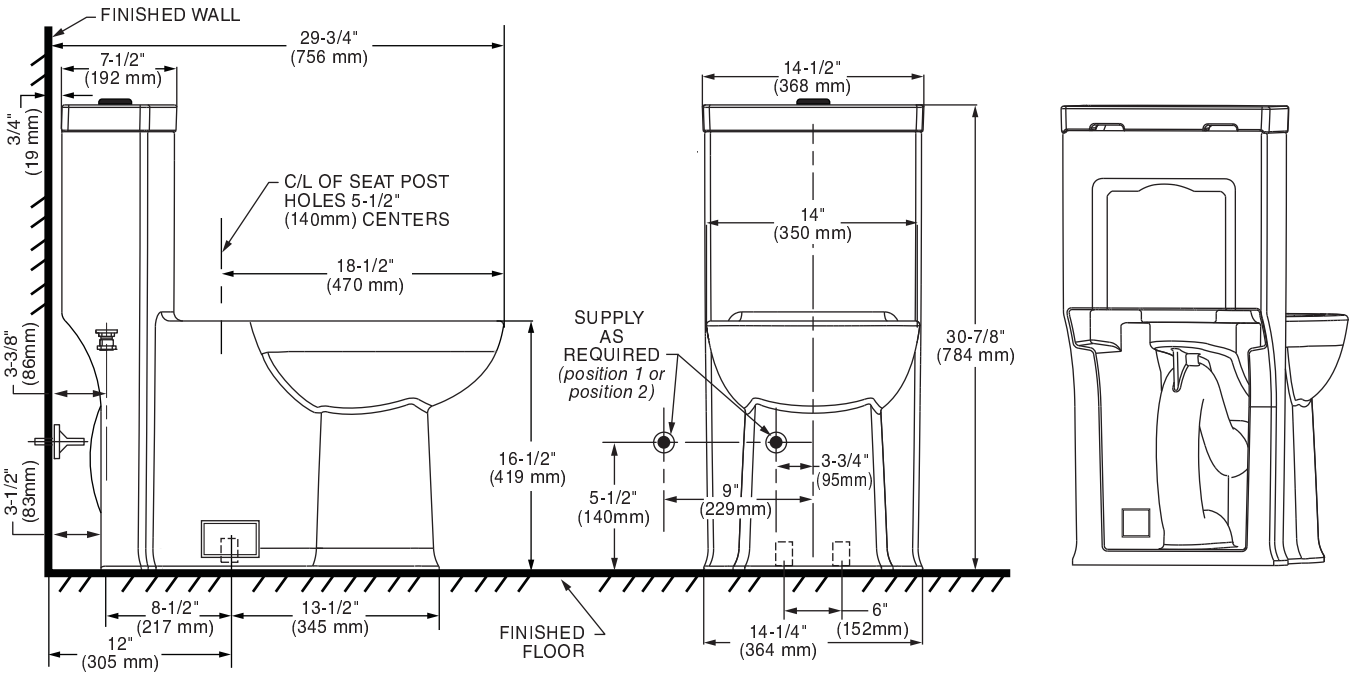

IMPORTANT: Water supply on the wall is required at 3-3/4" or 9" from centerline of the toilet (see rough-in). First suggested position is hidden behind the toilet. The geometry of the toilet gives space for this installation. The second suggested position is next to the toilet. Between these two positions, the space for the supply between wall and toilet is limited to 3-1/4". In this case, check your supply and hose dimensions.

SAVE FOR FUTURE USE

Product names listed herein are trademarks of AS America, Inc.
© AS America, Inc. 2012

3 INSTALL CLOSET BOLTS

Install closet bolts in flange channel, turn 90°, and slide into place 6" (152mm) apart and parallel to wall.

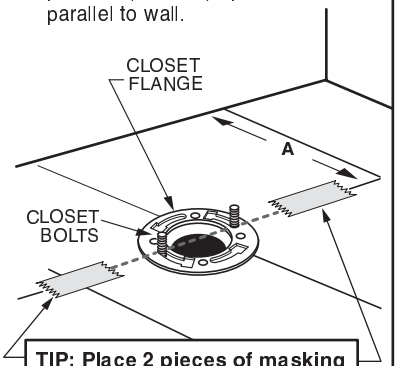

TIP: Place 2 pieces of masking tape on floor (as shown) to help with alignment in step 5.

4

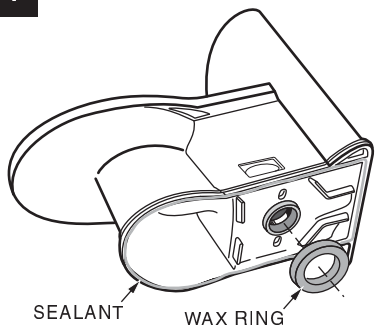

INSTALL WAX SEAL
Invert toilet on floor (cushion to prevent damage), and install wax ring evenly around waste flange (horn), with tapered end of ring facing toilet. Apply a thin bead of sealant around toilet base.

5

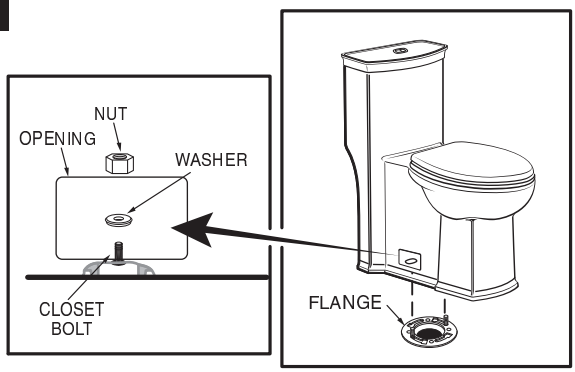

POSITION TOILET ON FLANGE

a. Unplug floor waste opening and install toilet on closet flange so bolts project through mounting holes.
b. Loosely install retainer washers and nuts.

6 INSTALL TOILET

a. Position toilet squarely to wall and, with a rocking motion, press bowl down fully on wax ring and flange. Alternately tighten nuts until toilet is firmly seated on floor.

⚠ **CAUTION:** DO NOT OVERTIGHTEN NUTS OR BASE MAY BE DAMAGED!

b. Install bolt covers:

1. Make sure that the bolt cover area on the toilet is clean and dry (see figure). Use a dry piece of cloth or soap and water if needed.
2. Take plastic bolt cover and peel the brown protective film off on both ends. The adhesive part is now visible and ready to be placed on the toilet (see figure).
3. Gently place the bolt cover on the toilet area (see picture) and if everything is aligned, push bolt cover firmly so it remains in place.
4. If not aligned, you can still take it off and put it back so it is aligned.
5. Repeat Step 3 for second bolt cover which is to be placed on opposite side of the toilet.
6. After 24 hours, the bolt cover adhesive has completely set off and if needed, you can remove/replace as needed. The dual lock technology is now in place.

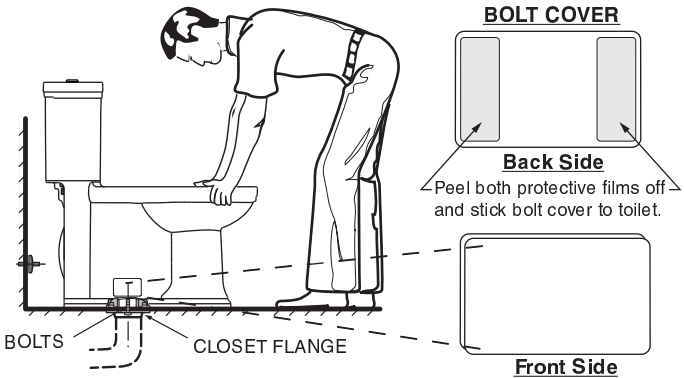

c. Smooth off the bead of sealant around base. Remove excess sealant.

7 INSTALL TOILET SEAT

Install toilet seat in accordance with manufacturer's directions.

8a

Before continuing, determine the type of water supply connection you have from the chart below and use the appropriate assembly parts required to properly reconnect the water supply. DO NOT use plumber's putty to seal these fittings.

METAL/COPPER FLARED TUBING	METAL FLANGED TUBING	METAL SPIRAL TUBING	*RECOMMENDED* VINYL/BRAIDED CONNECTOR
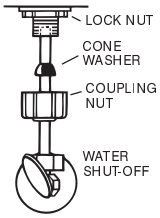	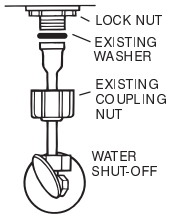	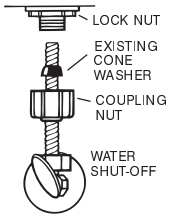	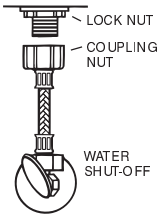
These parts must be used as illustrated to insure water-tight connection. Use of existing coupling nut may result in water leakage. Water supply tube or pipe must extend at least 1/2" inside threaded shank of valve (does not apply to flanged tubing).	Use existing coupling nut and washer.	Use existing spiral cone washer. Fluidmaster cone washer may not seal completely on spiral type supply line.	Captive cone washers already included. No additional washers needed.

CAUTION: DO NOT USE CONE WASHER WITH PLASTIC SUPPLY LINE.

CAUTION: Overtightening of LOCK NUT or COUPLING NUT could result in breakage and potential flooding.

8b

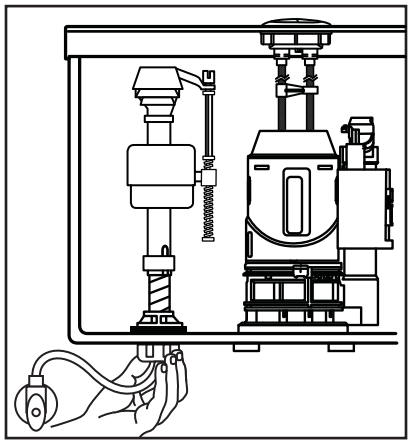

With correct washers in place (see Step 8a), tighten COUPLING NUT 1/4 turn beyond hand tight.

DO NOT OVERTIGHTEN.

9

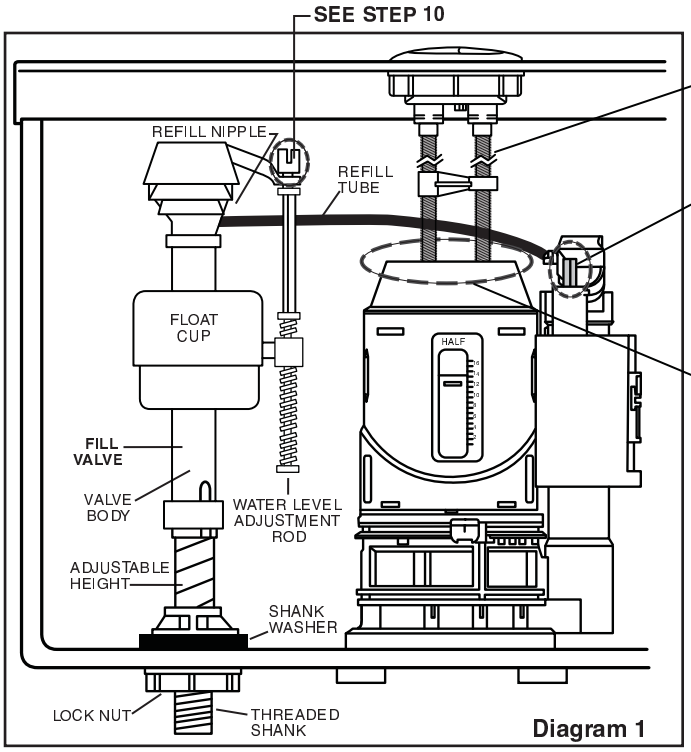

Diagram 1

Rod Adjustment
SEE STEP 11

IMPORTANT:
Refill Float Adjustment
If short flush does not refill the bowl, turn thumbscrew CCW 1 turn, flush, repeat if necessary.

Install and adjust push button rods for about 1/16" (1-1/2mm) clearance between rod end and valve button.
SEE STEP 11 -TIPS

10

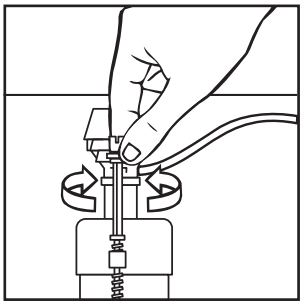

Turn on water supply. Submerge the FLOAT CUP under the water for 30 seconds. Adjust the water to desired level by turning WATER LEVEL ADJUSTMENT ROD and moving FLOAT CUP up or down.

11

FLUSH PUSH BUTTONS

- The large flush button should line up over the white actuator on the flush tower in the tank.
- The small flush button should line up over the gray actuator on the flush tower in the tank.
- Pressing both buttons at once will result in a short flush.

LARGE FLUSH BUTTON FOR SOLID WASTE
1.6 gal/flush
6 Liter/flush

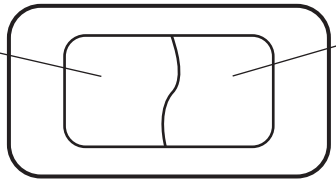

SMALL FLUSH BUTTON FOR LIQUID WASTE
1.1 gal/flush
4.1 Liter/flush

TIPS:
With the lid removed, directly press the flush button in the tank to confirm that the toilet is working properly. If not, follow troubleshooting guide.

1. Install Threaded Rods into holes in bottom of push buttons approximately 1/2" (12mm).
2. Lightly snug Locking Nut.
3. Place Lid on Tank.
4. Push Button to test flush. If more stroke is needed, loosen Locknut and turn Threaded Rod counterclockwise one (1) turn.
5. Replace Lid. Repeat until flush action is achieved.
6. If Valve stays open, turn Threaded Rod clockwise one (1) turn and lightly snug Locknut.

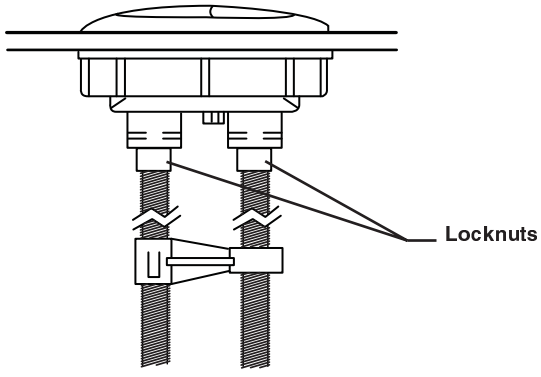

Threaded Rods

12

CARE AND CLEANING

When cleaning your toilet, wash it with mild, soapy water, rinse thoroughly with clear water and dry with a soft cloth. Avoid detergents, disinfectants, or cleaning products in aerosol cans. NEVER use abrasive scouring powders or abrasive pads on your toilet seat. Some bathroom chemicals and cosmetics may damage the seat's finish.

⚠ **WARNING:** Do not use in-tank cleaners. Products containing chlorine (calcium hypochlorite) can seriously damage fittings in the tank. This damage can cause leakage and property damage.
American Standard shall not be responsible or liable for any tank fitting damage caused by the use of cleaners containing chlorine (calcium hypochlorite).

13

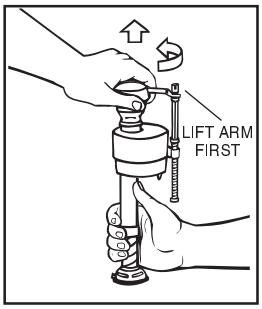

IMPORTANT: Always clear sand and rust from system.

- Make sure water supply is off. Remove valve TOP by lifting arm and rotating top and arm 1/8 turn counterclockwise, pressing down slightly on cap.

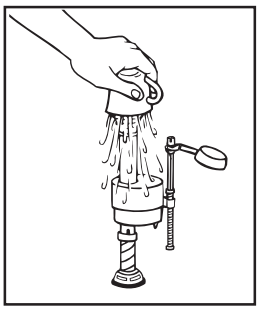

- While holding a container over the uncapped VALVE to prevent splashing, turn water supply on and off a few times. Leave water supply off.

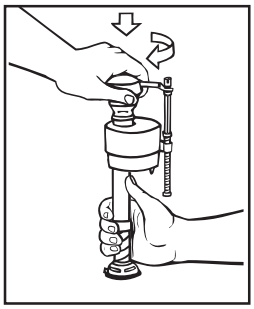

- Replace TOP by engaging lugs and rotating 1/8 turn clockwise. MAKE CERTAIN TIP IS TURNED TO THE LOCKED POSITION. VALVE MAY NOT TURN ON IF TOP IS NOT FULLY TURNED TO THE LOCKED POSITION.

Always use quality Fluidmaster repair parts when maintaining your Fluidmaster products. Fluidmaster shall not be responsible or liable for any damages caused by products used with Fluidmaster valves that were not manufactured by Fluidmaster, Inc.

TROUBLESHOOTING

IF FILL VALVE SHUTS OFF BUT CONTINUES TO LEAK SLOWLY, repeat Step 13.

IF FILL VALVE TURNS OFF AND ON DURING PERIODS OF NON-USE, it is a signal you are wasting water because:

- The end of the refill tube is inserted into overflow pipe, below water level in tank. Attach refill tube to overflow pipe using "S" clip provided.
- The flush valve is leaking because it's worn, dirty or misaligned with tank ball or flapper (replace with a new flapper).

IF FILL VALVE WON'T TURN ON OR SHUT OFF or REFILL OF TANK WATER IS SLOW after valve has been in use for some time, Fluidmaster Model 242 Replacement Seal may be needed.

Go to our website at www.fluidmaster.com for more solutions to toilet problems.

For troubleshooting information please contact:

Fluidmaster Inc
30800 Rancho Viejo Road
San Juan Capistrano, CA 92675
(949) 728-2000 (800) 631-2011
www.fluidmaster.com

© 2001 Fluidmaster, Inc.
® Registered trademark of Fluidmaster, Inc.

REPAIR PARTS LIST

NOTE: "XXX" represents color options. Specify when ordering.

PART NUMBER	DESCRIPTION
735169.XXX0A	Tank Cover
5218.110.XXX	Slow Close Contemporary EL Seat
7381073-XXX0A	Bolt Cap Cover Kit
738565-457.0070A	Inlet Valve
7381206-400.0070A	Dual Flush Valve Assembly
7381213-200.0070A	Dual Flush Valve Seal
7381203-200.0070A	Push Button Kit

TROUBLESHOOTING GUIDE

PROBLEM	POSSIBLE CAUSE	CORRECTIVE ACTION
Does not flush	a. Water supply valve closed.	a. Open valve and allow water to fill tank.
	b. Supply line blocked.	b. Shut off water supply, disconnect supply line and inspect all gaskets and washers. Reassemble.
	c. Sand or debris lodged in water control.	c. See Fluidmaster maintenance. (see Step 13)
Poor or sluggish flush	a. Tank water too low.	a. Check that the water level is set to the mark inside the tank.
	b. Bowl water too low.	b. Check that the refill tube is connected to the water control and flush valve port. Adjust refill float down until bowl water is restored. (see Step 9)
	c. Water supply valve partly closed.	c. Open water supply valve fully. Be sure that proper water supply tube size is used.
	d. Partially clogged trapway and/or drain pipe and/or vent.	d. Remove obstruction. Consult a plumber if necessary.
	e. Water supply pressure too low.	e. Minimum water supply pressure - 20psi. Wait for tank to refill.
Toilet leaks	a. Poor supply line connection.	a. Review Step 8a and 8b.
	b. Poor bowl to floor connection.	b. Review Step 4 through 6.
Toilet does not shut off	a. Flush valve seal leaking or deformed.	a. Clean debris from seal surface. Replace flush valve seal as needed.
	b. Sand or debris lodged in water control.	b. See Step 13 Fluidmaster maintenance.
	c. Water level set too high.	c. Set water level to mark on back of tank.

TROUBLESHOOTING GUIDE

PROBLEM	POSSIBLE CAUSE	CORRECTIVE ACTION
Does not flush	a. Water supply valve closed.	a. Open valve and allow water to fill tank.
	b. Supply line blocked.	b. Shut off water supply, disconnect supply line and inspect all gaskets and washers. Reassemble. Also, see Fluidmaster maintenance.
	c. Flush valve chain too loose or disconnected.	c. Readjust chain length as required.
	d. Sand or debris lodged in water control.	d. Shut off water supply. Remove cap and clean.
Poor or sluggish flush	a. Bowl water level too low.	a. Check that refill tube is connected to water control and inserted into tank overflow without being kinked or damaged.
	b. Supply valve partly closed.	b. Open supply valve fully. Be sure that proper supply tube size is used.
	c. Partially clogged trapway and/or drain pipe and/or vent.	c. Remove obstruction. Consult a plumber if necessary.
	d. Supply pressure too low.	d. Normal supply pressure must be at least 20 psi.
	e. Flush valve chain too tight, holding flush valve open.	e. Readjust chain length as needed. Review adjustments.
Toilet leaks	a. Poor supply line connection.	a. Review installation procedure of supply.
	b. Poor bowl to tank/floor connection.	b. Review installation procedure of bowl.
Toilet does not shut off	a. Flush valve seal leaking or deformed.	a. Clean debris from seal surface. Replace flush valve seal as needed.
	b. Sand or debris lodged in water control.	b. Shut off water supply. Remove cap and clean.

Please refer to the Installation Instructions for detailed corrective actions.

REPAIR PARTS LIST

Repair parts are determined by toilet tank number which can be found marked inside tank.

NOTE: *"XXX" represents color or trim finish options. Specify when ordering.*

PART NUMBER	DESCRIPTION	BOULEVARD		TROPIC		TOWN SQUARE	
		1.6	1.28	1.6	1.28	1.6	1.28
735148.XXX0A	Tank Cover, Boulevard	√	√				
735147.XXX0A	Tank Cover, Tropic			√	√		
735150.XXX0A	Tank Cover, Town Square					√	√
5218.110.XXX	Slow Close Contemporary EL Seat	√	√				
5216.110.XXX	Slow Close Transitional EL Seat			√	√		
5214.110.XXX	Slow Close Traditional EL Seat					√	√
7381073-XXX0A	Bolt Cap Kit	√	√			√	√
730835-XXX0A	Bolt Cap Kit			√	√		
7381064-XXX0A	Trip Lever, Boulevard	√	√				
7381097-XXX0A	Trip Lever, Tropic			√	√		
7381105-XXX0A	Trip Lever, Town Square					√	√
738565-439.0070A	Inlet Valve - 1.6 GPF	√		√		√	
738942-100.0070A	Flush Valve - 1.6 GPF	√		√		√	
738920-100.0070A	Flapper Assembly - 1.6 GPF	√		√		√	
738565-438.0070A	Inlet Valve - 1.28 GPF		√		√		√
738942-102.0070A	Flush Valve - 1.28 GPF		√		√		√
7381043-400.0070A	Flapper Assembly - 1.28 GPF		√		√		√

⚠WARNING:
Use of in tank cleaning products voids warranty as they may damage parts and cause leakage that may lead to property damage.

For further assistance please call:

In the USA
(800) 442-1902
www.americanstandard-us.com

In Canada
(800) 387-0369
www.americanstandard.ca

AS AMERICA, INC. ONE YEAR LIMITED WARRANTY FOR COMMERCIAL FIXTURES

If inspection of this AS America, Inc. ("American Standard®") plumbing product, within one year after its initial purchase, confirms that it is defective in materials or workmanship, American Standard® will repair or, at its option, exchange the product for a similar model.

If the commercial fixture is purchased with a matching American Standard flush valve, American Standard will extend the limited commercial warranty for the commercial fixture to five years. Proof of purchase is required and must show that the commercial fixture and flush valve are purchased together and in the same proof of purchase document.

This limited warranty applies only to the original purchaser and installation of these products. In the event of a limited warranty claim, proof of purchase will be required – **save sales receipt.**

This limited warranty does not apply to local building code compliance. Since local building codes vary considerably, the purchaser of this product should check with a local building or plumbing contractor to insure local code compliance before installation.

This limited warranty is void if the product has been moved from its initial place of installation; if it has been subjected to faulty maintenance, abuse, misuse, accident or other damages; if it was not installed in accordance with American Standard®'s instructions; or if it has been modified in a manner inconsistent with the product as shipped by American Standard®.

American Standard®'s option to repair or exchange the product under this limited warranty does not cover any labor or other costs of removal or installation. IN NO EVENT WILL AMERICAN STANDARD® BE LIABLE FOR THE COST OF REPAIR OR REPLACEMENT OF ANY INSTALLATION MATERIALS, INCLUDING BUT NOT LIMITED TO, TILES, MARBLE, ETC. American Standard® will not be responsible for any other incidental or consequential damages attributable to a product defect or to the repair or exchange of a defective product, all of which are expressly excluded from this limited warranty. This limited warranty does not cover any liability for consequential or incidental damages, all of which are hereby expressly disclaimed, or the extension beyond the duration of this limited warranty of any implied limited warranties, including those of merchantability or fitness for an intended purpose. (Some states or provinces do not allow the exclusion or limitation of implied limited warranties, so this exclusion may not apply to you.)

This limited warranty gives you specific legal rights. You may have other statutory rights that vary from state to state or from province to province, in which case this limited warranty does not affect such statutory rights.

AS AMERICA, INC. LIMITED WARRANTY FOR CHAMPION® PRO AND CHAMPION®4 TOILETS

This toilet comes with a limited lifetime warranty on chinaware, a limited 10 year warranty on all mechanical parts of the toilet and a limited 1 year warranty on the toilet seat if included with product. If inspection of this AS America, Inc. ("American Standard®") plumbing product, inclusive of the chinaware and all mechanical parts, confirms that it is defective in materials or workmanship, American Standard® will repair or, at its option, exchange the product for the same or a similar model.

This limited warranty applies only to the original non-commercial purchaser and installation of the products. In the event of a limited warranty claim, proof of purchase will be required – **save sales receipt.**

For this warranty to become effective, the warranty registration process must be completed via the internet or telephone per the warranty registration instructions.

This limited warranty does not apply to commercial installations. The warranty for commercial installations is 1 year on chinaware and mechanical parts and 1 year on the toilet seat if included with product.

This warranty **does not apply** to local building code compliance. Since local building codes vary considerably, the purchaser of the product should check with a local building or plumbing contractor to ensure local code compliance before installation.

This warranty **will be void** if the product has been moved from its initial place of installation; if it has been subjected to faulty maintenance, abuse, misuse, accident or other damage; if it was not installed in accordance with American Standard®'s instructions; or if it has been modified in a manner inconsistent with the product as shipped by American Standard®.

WARNING: This warranty **DOES NOT COVER** any damages caused by the use of in-tank cleaners. These products can seriously corrode the fittings in the tank. This damage can cause leakage and property damage. **American Standard® will not be responsible or liable for any damage caused by the use of in-tank cleaners.**

American Standard®'s option to repair or exchange the product under this warranty does not cover any labor or other costs of removal or installation including any costs of any surrounding material such as tile or marble. **American Standard® is not responsible for any other incidental or consequential damages attributed to a product defect or to the repair or exchange of a defective product, all of which are expressly excluded from this warranty.** (Some states or provinces do not allow the exclusion or limitation of implied warranties, so this exclusion may not apply to you.)

This warranty gives you specific rights. You may have other statutory rights that may vary from state to state or province to province, in which case this warranty does not affect such statutory rights.