INSTALLATION INSTRUCTIONS

American Standard
Style That Works Better

CADET 1.1 GPF TWO-PIECE PRESSURE-ASSISTED TOILETS
- **Model 2462.100 Cadet Elongated 15"**
- **Model 2467.100 Cadet Elongated 16-1/2" High Bowl**

YORKVILLE 1.1 GPF TWO-PIECE PRESSURE-ASSISTED TOILETS
- **Model 2876.100 Yorkville Elongated 15"**
- **Model 2878.100 Yorkville Elongated 16-1/2" High Bowl**

Thank you for selecting American Standard - the benchmark of fine quality for over 100 years. To ensure this product is installed properly, please read these instructions carefully before you begin. (Certain installations may require professional help.) Also be sure your installation conforms to local codes.

CAUTION: PRODUCT IS FRAGILE. TO AVOID BREAKAGE AND POSSIBLE INJURY HANDLE WITH CARE!
NOTE: *For proper operation the recommended working pressure is between 25 psi at valve when flushing and 80 psi static.*

RECOMMENDED TOOLS AND MATERIALS

Putty Knife	Regular Screwdriver	Adjustable Wrench	Sealant	Tape Measure
Hacksaw	Wax Ring/Gasket	Flexible Supply Tube	Closet Bolts	Carpenters Level
Closet Flange Set (Cadet Toilets)		*Neoprene or Graphite Felt Gasket (Yorkville Toilets)*		

1 REMOVE OLD TOILET

a. Close toilet supply valve and flush tank completely. Towel or sponge remaining water from tank and bowl.
b. Disconnect and remove supply line. NOTE: *If replacing valve, first shut off main water supply!*
c. Remove old mounting hardware, remove toilet and plug floor waste opening to prevent escaping sewer gases.
d. Remove closet bolts from flange and clean away old wax, putty, etc. from base area.
NOTE: *Mounting surface must be clean and level* ***before*** *new toilet is installed!*

FOR CADET TOILETS:

2-1 DIMENSIONS (Nominal)
NOTE: *Distance from wall to closet flange centerline (rough-in) must be 12" (305 mm)*

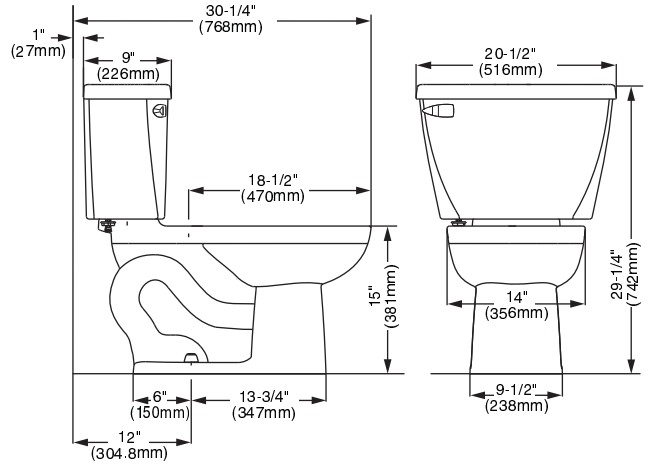

3-1 INSTALL CLOSET BOLTS

Install closet bolts in flange channel, turn 90°, and slide into place 6" (152 mm) apart and parallel to wall.

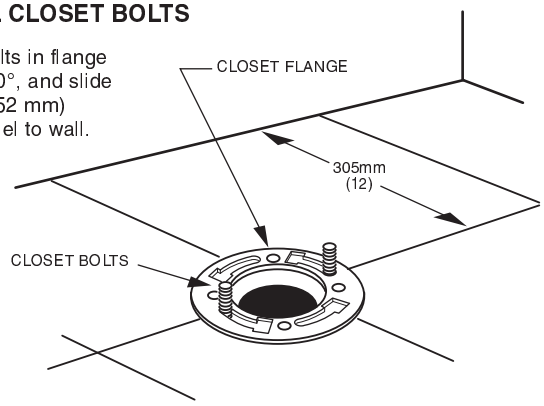

FOR YORKVILLE TOILETS:

2-2 DIMENSIONS (Nominal)
NOTE: *Distance from floor to closet flange centerline (rough-in) must be 4" (102 mm) with flange surface flush to 1/16" (16mm) max. beyond finished wall.*

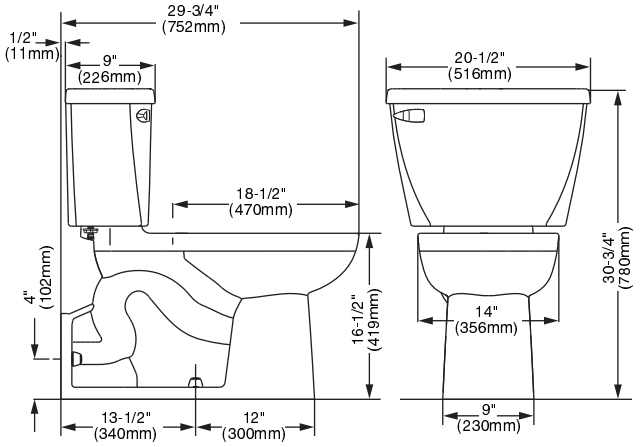

3-2 INSTALL CLOSET BOLTS

Install closet bolts in flange channel, turn 90°, and slide into place 6" (152 mm) apart and parallel to floor. (Use putty to hold bolts in place if necessary.) Brace under flooring as needed and drill two mounting pilot holes as shown.

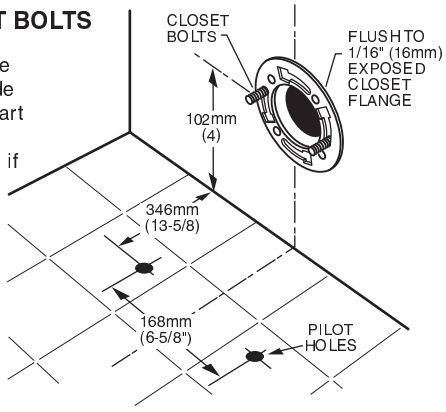

SAVE FOR FUTURE USE

Product names listed herein are trademarks of AS America, Inc.
© AS America, Inc. 2013

con't. FOR CADET TOILETS:

4-1 **INSTALL WAX SEAL**

Invert toilet on floor (cushion to prevent damage), and install wax ring evenly around waste flange (horn), with tapered end of ring facing toilet. Apply a thin bead of sealant around base flange.

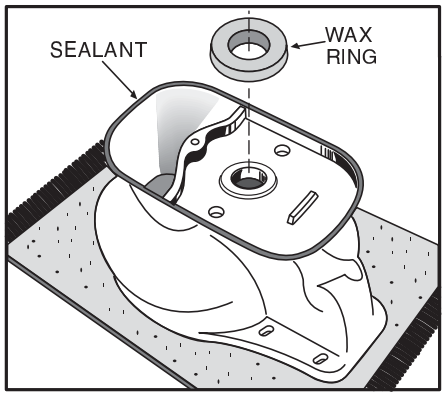

5-1

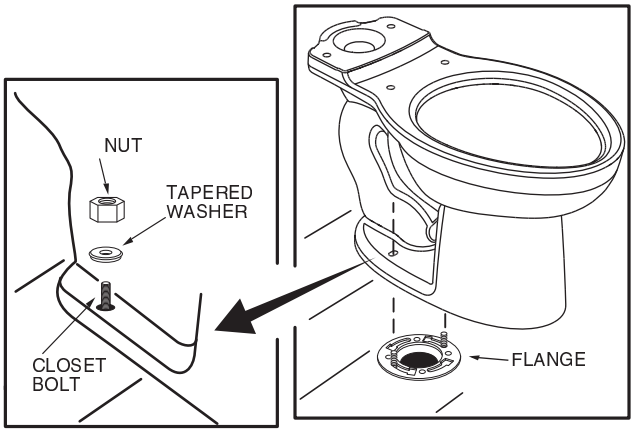

INSTALL TOILET ON FLANGE

a. Unplug floor waste opening and install toilet on closet flange so bolts project through mounting holes.

b. Loosely install retainer washers and nuts. Side of washers marked "THIS SIDE UP" *must* face up!

6-1

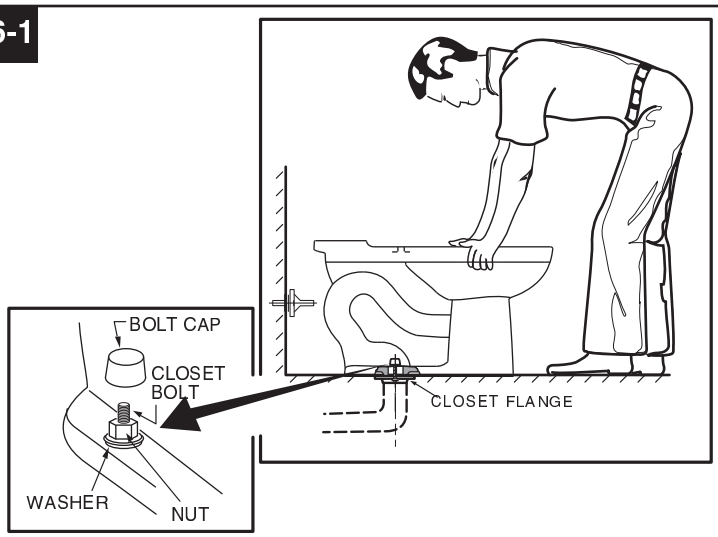

INSTALL TOILET

a. Position toilet squarely to wall and, with a rocking motion, press bowl down fully on wax ring and flange. Alternately tighten nuts until toilet is firmly seated on floor.

⚠ **CAUTION:** DO NOT OVERTIGHTEN NUTS OR BASE MAY BE DAMAGED!

b. Install caps on washers. (If necessary, cut bolt height to size before installing caps.)

c. Smooth off the bead of sealant around base. Remove excess sealant.

con't. FOR YORKVILLE TOILETS:

4-2 **INSTALL NEOPRENE OR GRAPHITE FELT SEAL***

Install seal evenly around waste flange (horn). Apply a thin bead of sealant around base flange.

* Note: Wax seal not recommended for this application.

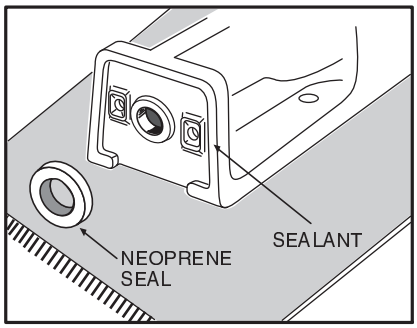

5-2

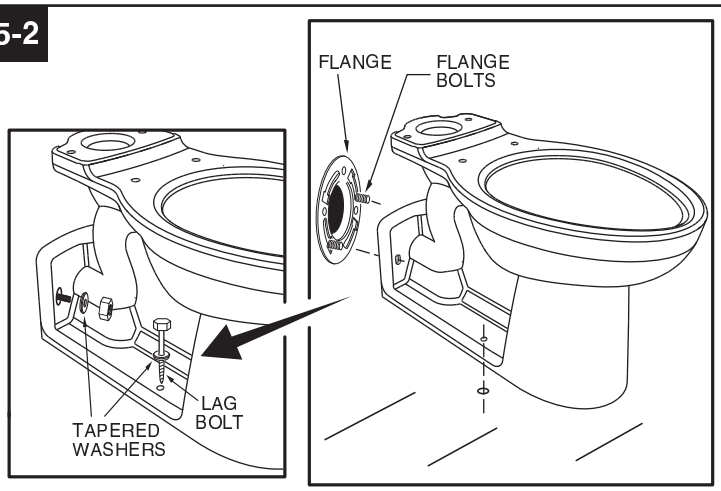

INSTALL TOILET ON FLANGE

a. Unplug floor waste opening and install toilet on closet flange so bolts project through mounting holes.

b. Loosely install retainer washers and nuts. Side of washers marked "THIS SIDE UP" *must* face up!

6-2

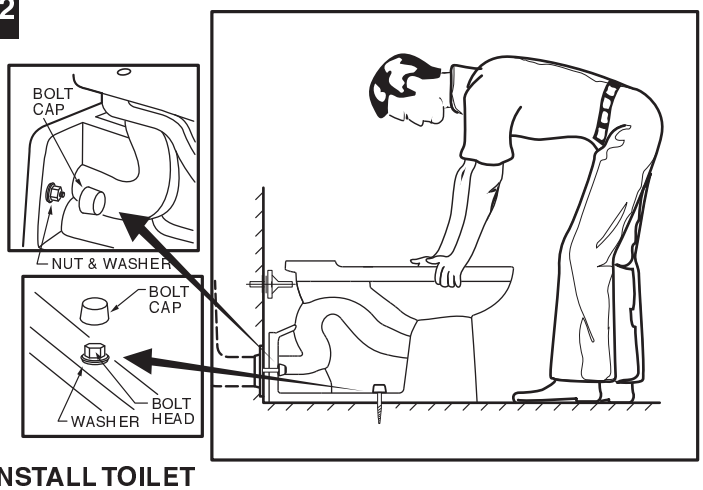

INSTALL TOILET

a. Position toilet squarely to wall and, with a rocking motion, push bowl against ring and flange. Alternately tighten nuts until toilet is firmly anchored.

⚠ **CAUTION:** DO NOT OVERTIGHTEN NUTS OR BASE MAY BE DAMAGED!

b. Insert the tapered washers (supplied in the kit) into the lag bolts (not supplied). Insert bolts through mounting holes and tighten into pre-drilled floor openings.

c. Install the four bolt caps on tapered washers. (If necessary, cut wall bolt length to size before installing caps.)

d. Smooth off the bead of sealant around base. Remove excess sealant.

7

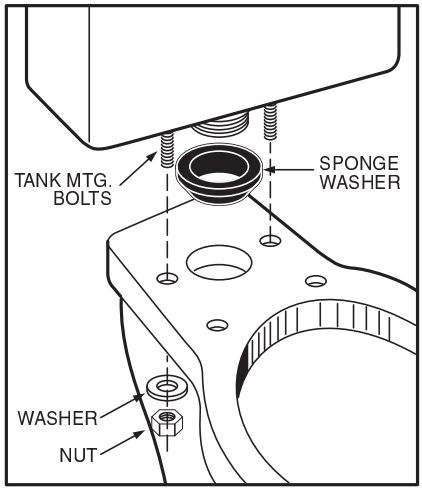

INSTALL TANK

a. Install large rubber gasket over threaded outlet on bottom of tank and lower tank onto bowl so that tapered end of gasket fits evenly into bowl water inlet opening, and tank mounting bolts go through mounting holes. Secure with metal washers and nuts.

b. With tank parallel to wall, alternately tighten nuts until tank is snugged down evenly against bowl surface.

⚠ **CAUTION:** DO NOT OVERTIGHTEN NUTS MORE THAN REQUIRED FOR A SNUG FIT!

8

INSTALL TOILET SEAT

Install toilet seat in accordance with manufacturer's directions.

9

Before continuing, determine the type of water supply connecation you have from the chart below and use the appropriate assembly parts required to properly reconnect the water supply. DO NOT use plumber's putty to seal these fittings.

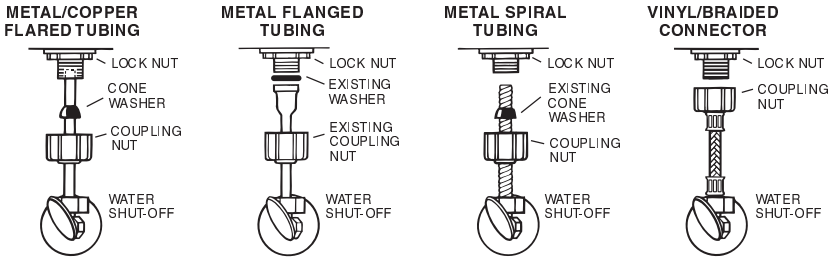

These parts must be used as illustrated to insure water-tight connection. Use of existing coupling nut may result in water leakage. Water supply tube or pipe must extend at least 1/2" inside threaded shank of valve (does not apply to flanged tubing).

Use existing coupling nut and washer.

Use existing spiral cone washer. Fluidmaster cone washer may not seal completely on spiral type supply line.

Captive cone washers already included. No additional washers needed.

CAUTION: DO NOT USE CONE WASHER WITH PLASTIC SUPPLY LINE.

CAUTION: Overtightening of LOCK NUT or COUPLING NUT could result in breakage and potential flooding.

10

ADJUSTMENTS

The flushometer tank is designed and factory-adjusted to provide a consistent, safe seal depth in the bowl after each flush. Field refill adjustment is not required. The refill has been preset and locked.

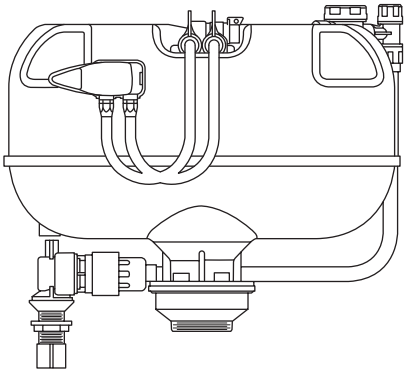

REPAIR PARTS LIST

Repair parts are determined by toilet tank number which can be found marked inside tank.

NOTE: *"XXX" represents color or trim finish options. Specify when ordering.*

PART NO.	DESCRIPTION	TOILET: CADET	TOILET: YORKVILLE
7381051-200	TRIP LEVER ASSEMBLY LH	✔	✔
7381065-200	TRIP LEVER ASSEMBLY, WDI PRESSURE ASSIST, RH	✔	✔
4142-100.XXX	TANK (COMPLETE WITH COUPLING COMPONENTS AND TANK TRIM)	✔	✔
4142.801.XXX	TANK (COMPLETE WITH COUPLING COMPONENTS AND RH TANK TRIM)	✔	✔
735133-400.XXX	TANK COVER	✔	✔
3481.100.XXX	BOWL, ELONGATED 15"	✔	
3483.100.XXX	BOWL, ELONGATED 16-1/2"H	✔	
3701.100.XXX	BOWL, ELONGATED 15"		✔
3703.100.XXX	BOWL, ELONGATED 16-1/2" (419mm)		✔
034783-XXX0A	BOLT CAP COVER KIT (INCL TWO COVERS/WASHERS)	✔	
034602-0070A	COUPLING GASKET	✔	✔
7381054-100	LOWER SUPPLY ASSEMBLY	✔	✔
7381053-100	UPPER SUPPLY ASSEMBLY	✔	✔
7381052-100	VALVE CARTRIDGE ASSEMBLY	✔	✔
7301320-100	TANK COUPLING KIT	✔	✔
034783-XXX0A	BOLTS AND CAPS		✔
735133-401.XXX	TANK COVER FOR LOCKING DEVICE	✔	✔
603111-0030A	COVER LOCKING DEVICE KIT	✔	✔

11 CARE AND CLEANING

When cleaning your toilet, wash it with mild, soapy water, rinse thoroughly with clear water and dry with a soft cloth. Avoid detergents, disinfectants, or cleaning products in aerosol cans. NEVER use abrasive scouring powders or abrasive pads on your toilet seat. Some bathroom chemicals and cosmetics may damage the seat's finish.

TROUBLESHOOTING GUIDE

NOTE: The presence of a small amount of water in the bottom of the tank is normal. The air inducer is designed to leak for short periods during each flush cycle as a self-cleaning action. Drippage is drained into the bowl. If used on water system containing excessive sand and/or debris, a periodic cleanup of inlet strainer is recommended. (See enclosed instructions for strainer cleaning.)

⚠ WARNING

When servicing or replacing components of the flushometer tank system, be sure that the water supply is shut off and the toilet is flushed to relieve pressure in the flushometer tank. For service of the Flushometer Tank System, see enclosed literature.

PROBLEM	POSSIBLE CAUSE	CORRECTIVE ACTION
Does not flush	a. Water supply valve closed. b. Supply line blocked. c. Trip lever linkage damaged.	a. Open valve and allow water to fill tank. b. Shut off water supply, disconnect supply line, and inspect all gaskets and washers. Reassemble. c. Check trip lever, linkage, and actuator wire assemblies for damage.
Poor or sluggish flush	a. Supply valve partly closed. b. Plugged inlet strainer. c. Supply pressure too low. d. Partially clogged trapway and/or drain pipe and/or vent. e. Malfunctioning pressure regulator.	a. Open supply valve fully. Be sure that proper supply tube size is used. b. Remove and clean strainer per enclosed instructions c. Normal supply pressure must be at least 25 psi. d. Remove obstruction. Consult a plumber if necessary. e. Replace lower supply assembly.
Toilet leaks	a. Poor bowl to tank/floor connection.	a. Review Step 4 through 7 of installation procedure.
Toilet does not shut off	a. Supply pressure too low.	a. Normal supply pressure must be at least 25 psi.

AS AMERICA, INC. ONE YEAR LIMITED WARRANTY

If inspection of this AS America, Inc. ("American Standard") plumbing product, within one year after its initial purchase, confirms that it is defective in materials or workmanship, American Standard will repair or, at its option, exchange the product for a similar model.

This limited warranty applies only to the original purchaser and installation of these products. In the event of a limited warranty claim, proof of purchase will be required—save sales receipt.

This limited warranty does not apply to local building code compliance. Since local building codes vary considerably, the purchaser of this product should check with a local building or plumbing contractor to insure local code compliance before installation.

This limited warranty is void if the product has been moved from its initial place of installation; if it has been subjected to faulty maintenance, abuse, misuse, accident or other damages; if it was not installed in accordance with American Standard's instructions; or if it has been modified in a manner inconsistent with the product as shipped by American Standard.

American Standard's option to repair or exchange the product under this limited warranty does not cover any labor or other costs of removal or installation. IN NO EVENT WILL AMERICAN STANDARD BE LIABLE FOR THE COST OF REPAIR OR REPLACEMENT OF ANY INSTALLATION MATERIALS, INCLUDING BUT NOT LIMITED TO TILES, MARBLE ETC. American Standard will not be responsible for any other incidental or consequential damages attributable to a product defect or to the repair or exchange of a defective product, all of which are expressly excluded from this limited warranty. This limited warranty does not cover any liability for consequential or incidental damages, all of which are hereby expressly disclaimed, or the extension beyond the duration of this limited warranty of any implied limited warranties, including those of merchantability or fitness for an intended purpose. (Some states or provinces do not allow the exclusion or limitation of implied limited warranties, so this exclusion may not apply to you.)

This limited warranty gives you specific legal rights. You may have other statutory rights that vary from state to state or from province to province, in which case this limited warranty does not affect such statutory rights.

For service under this warranty, it is suggested that a claim be made through the contractor or dealer from or through whom the product was purchased, or that a service request (including a description of the product model and of the defect) be sent to the following address:

In the United States:
American Standard Brands
P.O. Box 6820
Piscataway, New Jersey 08855
Attention: Director of Consumer Affairs

For residents of the United States, warranty information may also be obtained by calling the following toll free number: (800) 442-1902
www.americanstandard-us.com

In Canada:
AS Canada ULC
2480 Stanfield Rd.
Mississauga, Ontario
Canada L4Y 1S2

Toll Free: (800) 387-0369
www.americanstandard.ca

In Mexico:
Customer Service Manager
AS Maquila, S.A. de C.V.
Via Morelos #330
Col. Santa Clara
Ecatepec 55540 Edo. Mexico
www.americanstandard.com.mx