No.	DESCRIPTION	MATERIAL
1	SPUD	CAST LOW LEAD BRASS ALLOY
2	COPPER TUBE NUT	CAST BRASS ASTM B62 ALLOY C83600
3	FIBER GASKET	ASTM D170 VULCANIZED FIBER

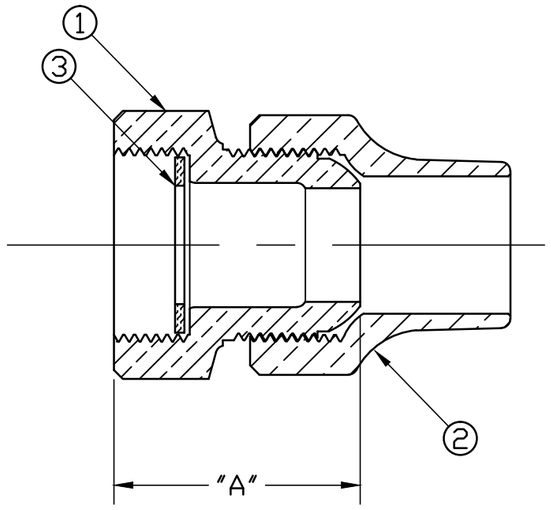

SIZE	A
1/2x3/4	1.72
5/8x3/4	1.69
3/4	1.62
3/4x1	1.69
1	1.78
1x3/4	1.69

NOTE: ALL WETTED PARTS ARE LOW LEAD BRASS ALLOY

FILEPATH: PROD-ENG\MUELLER\ASYSUBMITTALS\H15480N

REV	ECR	DESCRIPTION	DATE	BY	CHKR

PER EST NO: DXXXX EST FIN WT = 0.0000 lbs

DRFTR	jGarvin	9/13/11
CHKR		
ENGR		
MGR		
	BY	DATE

STK No:

MAT'L:

DESCR. CORPORATION STOP COUPLING
LOW LEAD BRASS(I/S MUELLER x CS)

DWG NUMBER H15480N

Mueller Co.

UNLESS OTHERWISE NOTED
SURFACE PREPARATION:
BREAK CORNER(S) ---- .000
SURFACE FINISH -- XX RMS
TOLERANCE(S):
LINEAR ---------- ± .000
ANGULAR --------- ± 0°00'

THIRD ANGLE PROJECTION

REF. No.

SCALE FULL

DWG NUMBER H15480N

DWG NUMBER H15480N 44²-MRKTG

TITLE TO AND OWNERSHIP OF THIS ENGINEERING DATA REMAINS IN Mueller Co. NO USE IS TO BE MADE OF THIS DATA EXCEPT AS SPECIFICALLY AUTHORIZED BY Mueller Co. ASSENT ON THE PART OF THE RECIPIENT TO THESE CONDITIONS IS PRESUMED