CONCETTO
Single-Handle Kitchen Faucet
MODEL # 32665003

Pure Freude an Wasser

GROHE

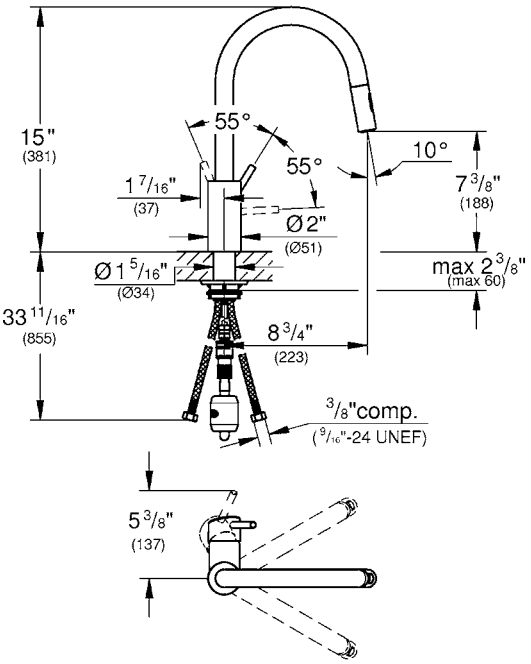

Product Description:
CONCETTO
Single-Handle Kitchen Faucet

Standard Specification:
- High spout
- Single hole installation
- **GROHE SilkMove** 1.4" (35 mm) ceramic cartridge
- **GROHE StarLight** chrome finish
- **GROHE EasyDock** guarantees easy retraction and smooth docking back to the starting position
- **GROHE Zero** isolated inner water ways - lead and nickel free
- Pull-out dual spray - switch from regular flow to shower spray
- Swivel spout
- Integrated non-return valve
- Protected against backflow
- Stainless steel flex lines
- Quick installation system
- Max Flow Rate: 1.75 gpm (6.6 L/min)
- GROHE Limited Lifetime Warranty

Applicable Codes & Standards:
- Energy Policy Act of 1992
- NSF 61
- NSF 372
- ASME A112.18.1/CSA B125.1
- US Federal and State material regulations
- ICC/ANSI A117.1

Color:
❑ 32665003 Starlight Chrome