PF7870

Two Handle Roman Tub Faucet

Product Features

- Two handle roman tub faucet
- Ceramic disc cartridge
- Metal lever handles
- Rough-in and trim kit included
- 100% factory pressure tested

PF7870

Model Numbers

PF7870CP	Polished chrome finish
PF7870BN	Brushed nickel finish
PF7870ORB	Oil rubbed bronze finish

Available Parts

PF141579PK	Pair of cartridges (hot & cold)

Product Specifications

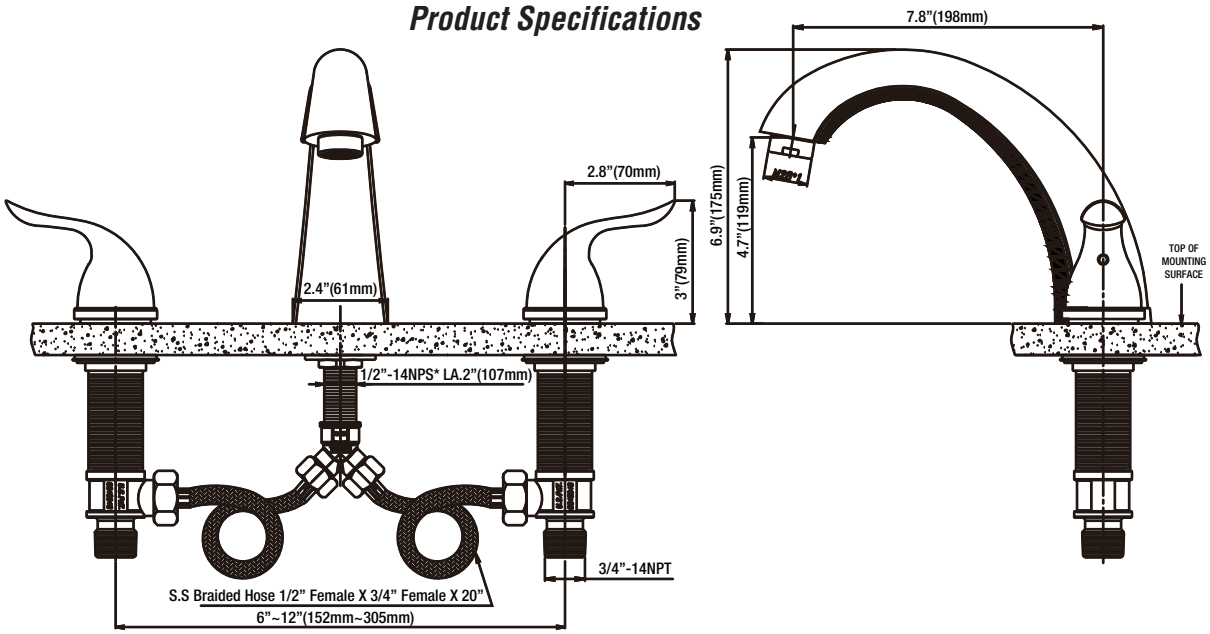

Warranty and Codes

This product comes complete with installation, operating, care and maintenance instructions. This PROFLO faucet carries a limited lifetime warranty when installed in residential applications. The warranty is five years in commercial applications. This product meets ANSI: A112.18.1M

NSF-61

Distributed Exclusively by Ferguson and Wolseley Canada

© 2015 Ferguson Enterprises, Inc.