# SUBMITTAL INFORMATION

## 80 Series Coppersetter - *(VBH87-xxB-11-77-NL style)*

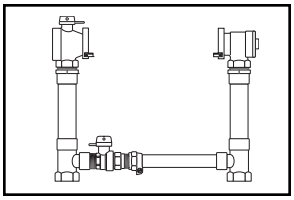

**FLANGED ANGLE BALL VALVE BY FLANGED ANGLE CHECK VALVE WITH BY-PASS (2" METER)**

**FEMALE IRON PIPE THREAD VERTICAL INLET AND OUTLET**

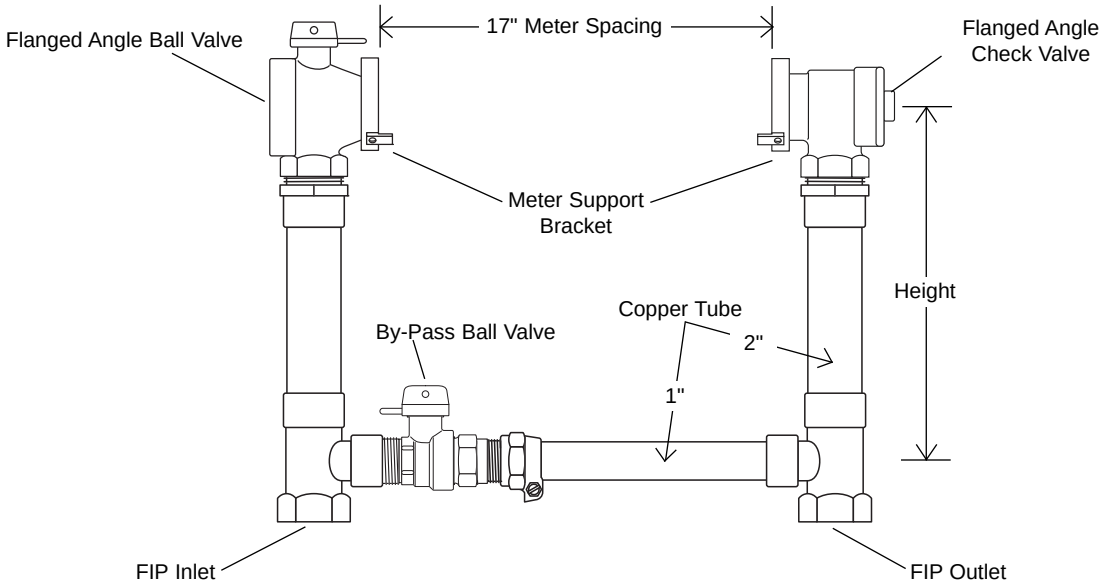


| SERVICE LINE CONNECTION | | HEIGHT | APPROX. WT. LBS. | CATALOG NUMBER | ✓ SUBMITTED ITEM(S) |
|---|---|---|---|---|---|
| FIP INLET | FIP OUTLET | | | | |
| 2" | 2" | 12" | 32.0 | VBH87-12B-11-77-NL | |
| | | 15" | 33.0 | VBH87-15B-11-77-NL | |
| | | 18" | 34.0 | VBH87-18B-11-77-NL | |
| | | 21" | 36.0 | VBH87-21B-11-77-NL | |
| | | 24" | 37.0 | VBH87-24B-11-77-NL | |
| | | 27" | 39.0 | VBH87-27B-11-77-NL | |

### FEATURES

- All brass that comes in contact with potable water conforms to AWWA Standard C800 (UNS NO C89833)
- The product has the letters “NL” cast into the main body for proper identification
- Brass components that do not come in contact with potable water conform to AWWA Standard C800 (ASTM B-62 and ASTM B-584, UNS NO C83600 - 85-5-5-5)
- Constructed with Type K Copper and conforms to ASTM B-88, Copper Alloy #122
- All Ford Meter Setters are assembled with Lead-Free Solder
- Meter Support Brackets are standard
- Padlock Wing is standard on all Angle Meter Ball Valves or Key Valves

The Ford Meter Box Company considers the information in this submittal form to be correct at the time of publication. Item and option availability, including specifications, are subject to change without notice. Please verify that your product information is current.

**The Ford Meter Box Company, Inc.**
P.O. Box 443, Wabash, Indiana U.S.A. 46992-0443
Phone: 260-563-3171 / Fax: 800-826-3487
Overseas Fax: 260-563-0167
http://www.fordmeterbox.com

11/15/12

Submitted By: