SUBMITTAL INFORMATION

70 Series Coppersetter - *(VV76-xx-11-66-NL style)*

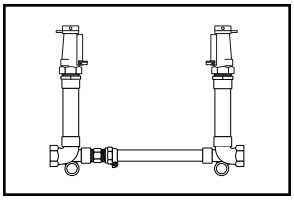

FLANGED ANGLE KEY VALVE BY FLANGED ANGLE KEY VALVE (1-1/2" METER)

FEMALE IRON PIPE THREAD INLET AND OUTLET

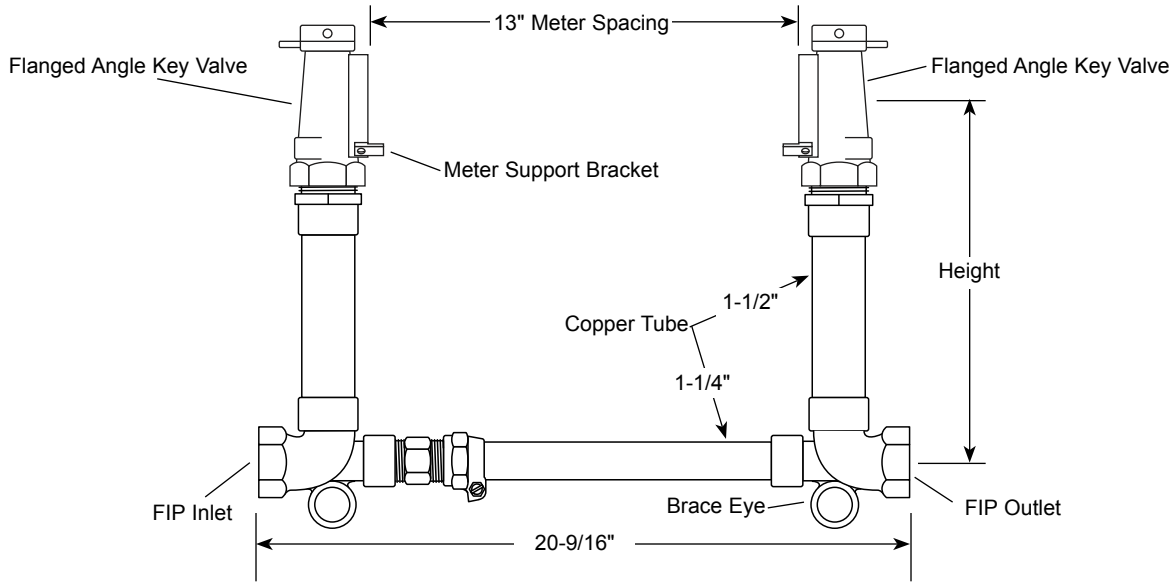

Service Line Connection		Height	Approx. Wt. Lbs.	Catalog Number	✓ Submitted Item(s)
FIP Inlet	FIP Outlet				
1-1/2"	1-1/2"	12"	30	VV76-12-11-66-NL	
		15"	31	VV76-15-11-66-NL	
		18"	32	VV76-18-11-66-NL	
		21"	32	VV76-21-11-66-NL	
		24"	33	VV76-24-11-66-NL	
		27"	33	VV76-27-11-66-NL	

Note: Ford recommends using insert stiffeners with plastic pipe or tubing.
Note: The flange inverted key angle valves should **not** be used as a customer shut-off on the customer side of the meter.

FEATURES

- All brass that comes in contact with potable water conforms to AWWA Standard C800 (ASTM B584, UNS C89833)
- The product has the letters “NL” cast into the main body for lead-free identification
- Brass components that do not come in contact with potable water conform to AWWA Standard C800 (ASTM B62 and ASTM B584, UNS C83600, 85-5-5-5)
- Constructed with Type K copper and conforms to ASTM B88, UNS C12200
- All Ford Meter Setters are assembled with lead-free solder
- Bracing eyes are standard
- Meter support brackets are standard
- Padlock wing is standard on all angle meter ball valves or key valves
- Drop-in rubber gaskets are included with all meter flanges
- Optional By-pass - add “B” following the height. Example: VV76-12B-11-66-NL
- Optional High By-pass - add “HB” following the height. Example: VV76-12HB-11-66-NL

The Ford Meter Box Company considers the information in this submittal form to be correct at the time of publication. Item and option availability, including specifications, are subject to change without notice. Please verify that your product information is current.

The Ford Meter Box Company, Inc.
P.O. Box 443, Wabash, Indiana U.S.A. 46992-0443
Phone: 260-563-3171 / Fax: 800-826-3487
Overseas Fax: 260-563-0167
www.fordmeterbox.com

12/19/17

Submitted By: