SUBMITTAL DATA SHEET

NL Large Size Meter Setter – 720R615WWFF 665

FNPT x FNPT

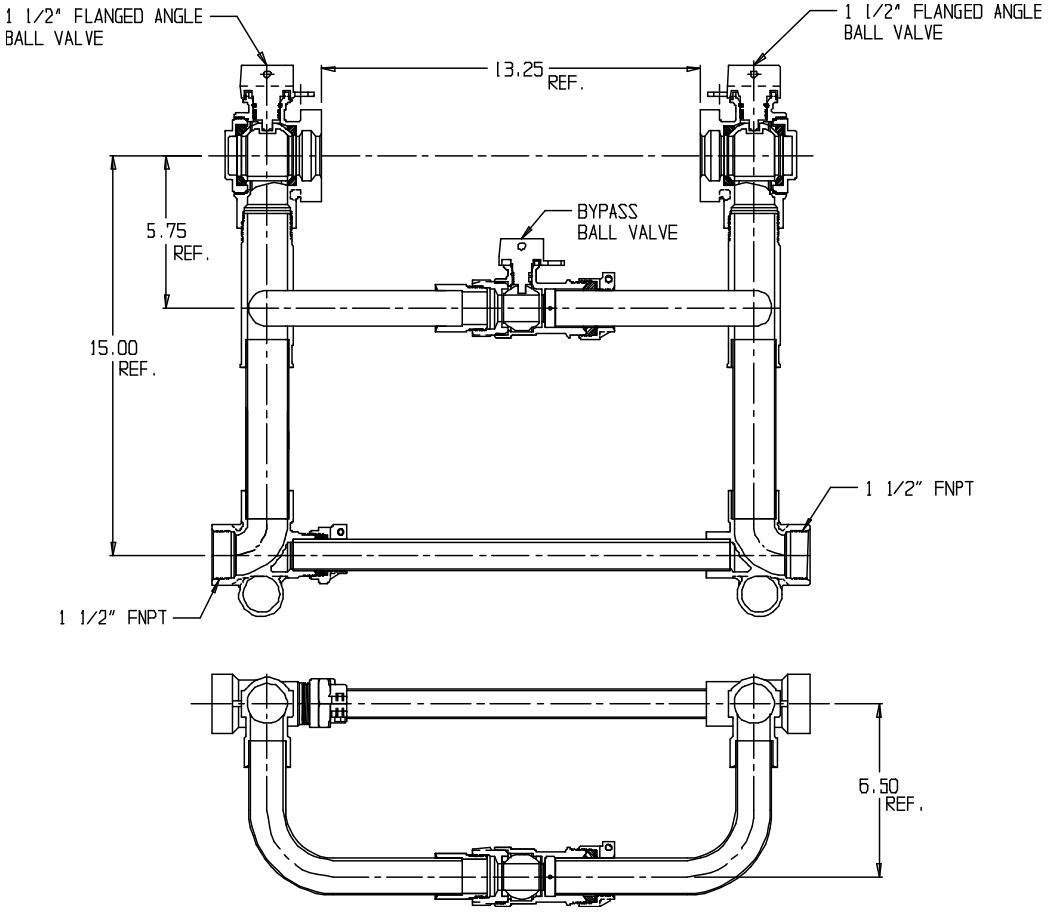

SUBMITTAL INFORMATION

- Manufactured in compliance with ANSI/AWWA C800 (latest revision)
- Brass components in contact with potable water conform to ASTM B584, UNS C89833 (latest revision) and identified with "NL"
- Certified to NSF/ANSI 372
- Brass components not in contact with potable water conform to ASTM B62 and ASTM B584, UNS C83600 -85-5-5-5 (latest revision)
- Copper tubing made in compliance with ASTM B88, UNS C12200 (latest revision)
- Lead free solder joints
- Designed to provide proper meter spacing for ease of installation
- Padlock wings standard on all valves

A.Y. McDonald Mfg. CO.
P.O. Box 508
Dubuque, IA 52004-508

Toll Free: 1-800-292-2737
Fax: 1-800-832-9296
Hours: 7:00 a.m. – 5:00 p.m., CST

sales@aymcdonald.com
www.aymcdonald.com

A.Y. McDonald considers the information on this assembly drawing correct when published. Item and option availability, including specifications, are subject to change without notice.

Submitted by: