# Metroflush® Z6200 Series

## Metroflush Piston-Operated Flush Valve

## Installation, Operation, Maintenance and Parts Manual

**Patented and Patents Pending**

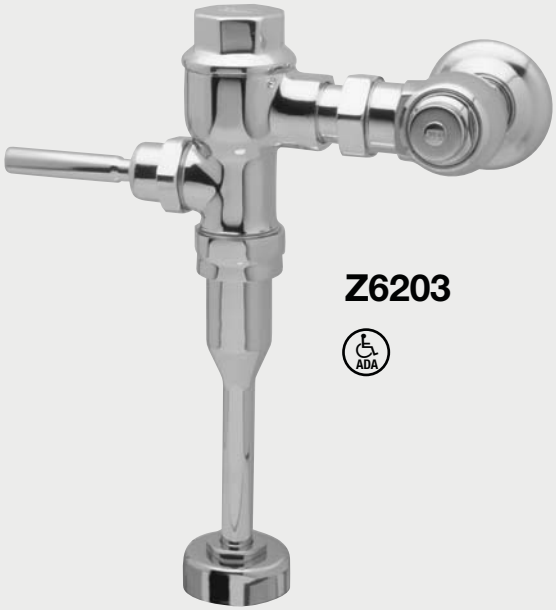

**Z6203**



**Z6210**

**Metroflush**
**Piston-Operated Flush Valve**
**Z6200**
**Z6201**
**Z6203**
**Z6210**

## LIMITED WARRANTY

All goods sold hereunder are warranted to be free from defects in material and factory workmanship for a period of three years from the date of purchase. Decorative finishes warranted for one year. We will replace at no cost goods that prove defective provided we are notified in writing of such defect and the goods are returned to us prepaid at Sanford, NC, with evidence that they have been properly maintained and used in accordance with instructions. We shall not be responsible for any labor charges or any loss, injury or damages whatsoever, including incidental or consequential damages. The sole and exclusive remedy shall be limited to the replacement of the defective goods. Before installation and use, the purchaser shall determine the suitability of the product for his intended use and the purchaser assumes all risk and liability whatever in connection therewith. Where permitted by law, the implied warranty of merchantability is expressly excluded. If the products sold hereunder are “consumer products,” the implied warranty of merchantability is limited to a period of three years and shall be limited solely to the replacement of the defective goods. All weights stated in our catalogs and lists are approximate and are not guaranteed.

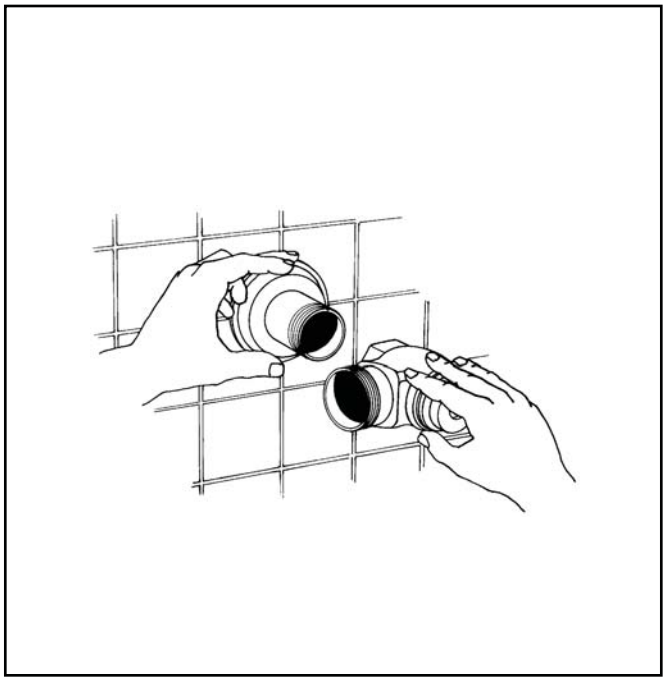

**1** Install stop valve using proper supply escutcheon and sweat solder kit if applicable.

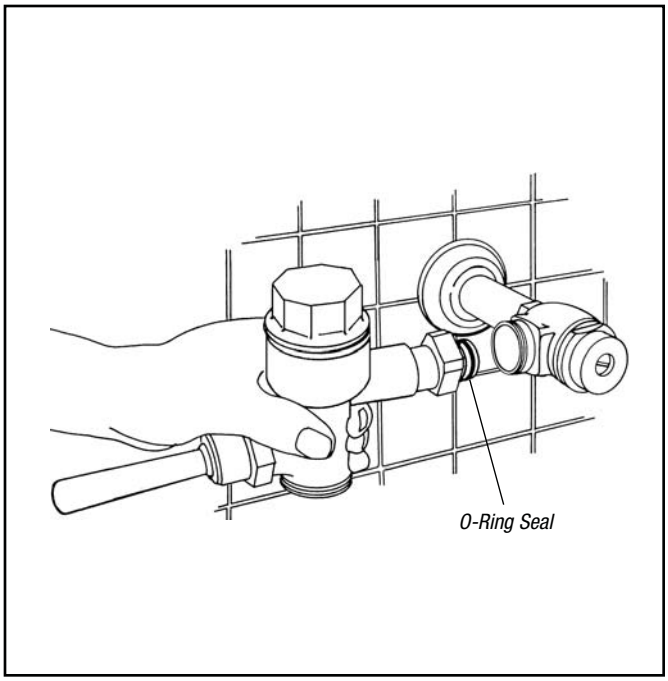


**2** Insert flush valve tailpiece into stop valve, being certain 'O'-ring seal is in place. Wet seal with water to lubricate. Hand tighten locknut. Determine length of vacuum breaker tube required and cut as necessary. Assemble vacuum breaker tube assembly between flush valve and fixture spud.

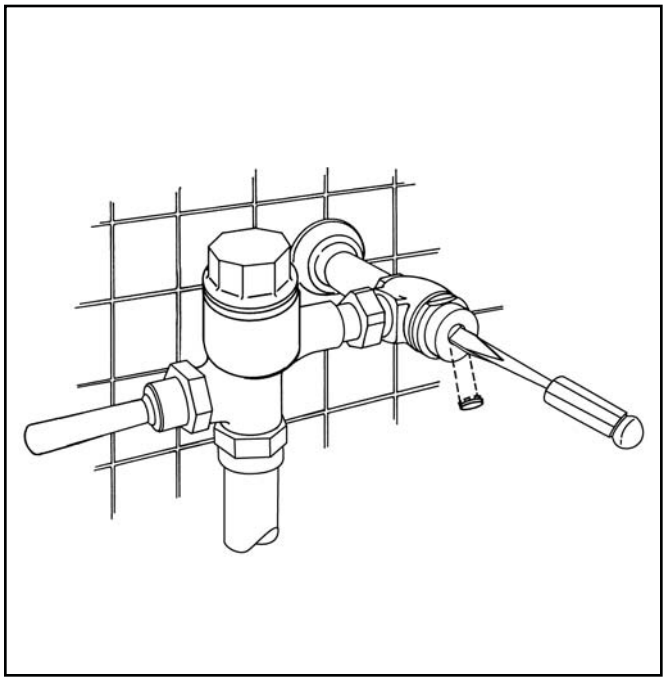

**3** Flushing of supply lines by using the following procedure is recommended, after installation of all valves.

A. Close stop valves by using adjusting screw behind adjusting screw cover. Do not remove stop valve cap.

B. Remove main valve body cover and working part from flush valve.

C. Replace only main valve body cover. Tighten main valve body cover.

D. Open the stop valve, by using the adjusting screw, until debris is purged.

E. Shut the stop valve, replace working part and retighten cover.

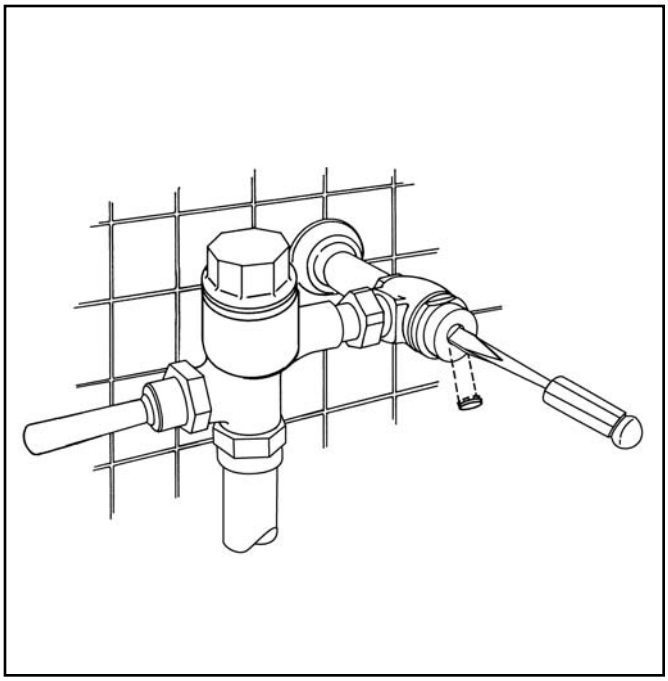

**4** Set flush valve for proper operation by adjusting stop valve. Stop valve adjustments can only be made by using the adjusting screw located behind the adjusting screw cover. (Water must be shut off at main supply valve if stop cap is to be removed.) Final setting should provide enough water flow to evacuate a closet fixture and should be such that a urinal fixture will not overflow when continually flushed. Secure adjusting screw cover.

# Metroflush® Parts Replacement & Repair Guide



*Z6200 Series*

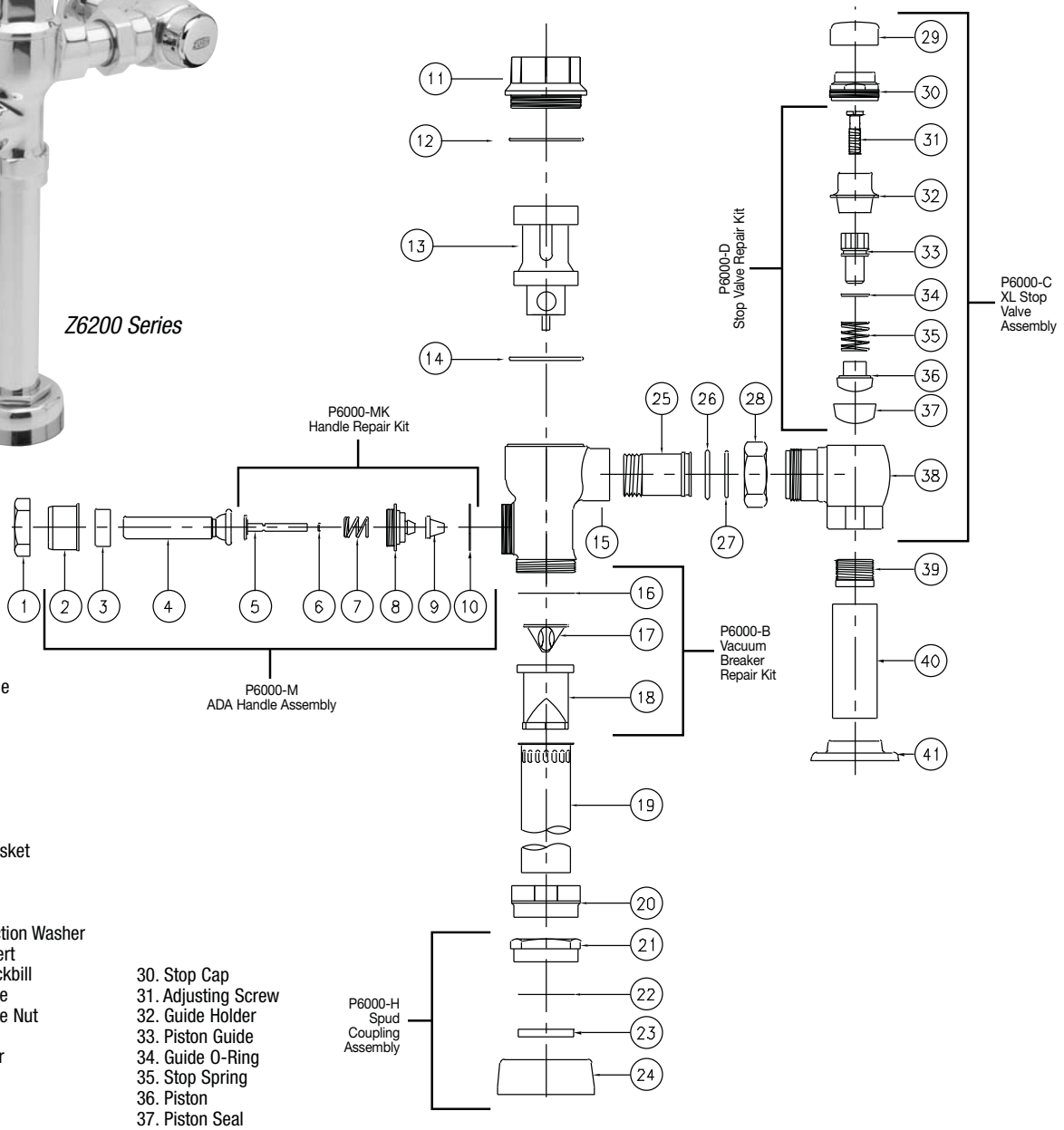


**Parts Identification**

1. Handle Nut
2. Handle Sleeve
3. Handle Insert
4. Low Force/ ADA Compliant Handle
5. Actuator Rod
6. Handle O-Ring
7. Handle Spring
8. Handle Seal Retainer
9. Handle Seal
10. Gasket
11. Valve Body Cover
12. Valve Body Cover Gasket
13. Internal Kit
14. Main Seat
15. Valve Body
16. Vacuum Breaker Friction Washer
17. Vacuum Breaker Insert
18. Vacuum Breaker Duckbill
19. Vacuum Breaker Tube
20. Vacuum Breaker Tube Nut
21. Spud Nut
22. Spud Friction Washer
23. Spud Sleeve
24. Spud Escutcheon
25. Tailpiece
26. Snap Ring
27. Tailpiece O-Ring
28. Locking Nut
29. Vandal-Resistant Control Stop Cover
30. Stop Cap
31. Adjusting Screw
32. Guide Holder
33. Piston Guide
34. Guide O-Ring
35. Stop Spring
36. Piston
37. Piston Seal
38. Stop Body
39. Sweat Solder Adaptor
40. Supply Cover Tube
41. Cast Wall Escutcheon

| Covers and Repair Kits | Product No. |
|---|---|
| Outside Cover - CP – Item 11 | P6200-LL |
| Outside Cover O-Ring - Item 12 | P6200-L12 |
| Closet Repair Kit - Item 13 | P6200-EC |
| Urinal Repair Kit - Item 13 | P6200-EU |
| Low Consumption Closet Kit - Item 13 | P6200-EC-WS1 |
| Low Consumption Urinal Kit - Item 13 | P6200-EU-WS1 |
| Main Seat - Item 14 | P6200-E14 |

| Handle Assembly and Repair Kits | Product No. |
|---|---|
| ADA Handle Assembly (Side) Includes Items 2-10 | P6000-M |
| Handle Repair Kit (Side) Includes Items 5-10 | P6000-MK |
| Handle Seal Includes Item 9 | P6000-M9 |
| Handle Gasket Includes Item 10 | P6000-M10 |
| **Control Stop Repair Kit and Parts** | **Product No.** |
| Control Stop Repair Kit for 1" and 3/4", Includes Items 31-37 | P6000-D-SD |
| Seal Seat for 1" and 3/4", Includes Item 37 | P6000-D42 |
| VP Control Stop Repair Kit for 1" and 3/4", Includes Items 31-37. | P6000-D-VP |
| Vandal-Resistant Cover Includes Item 29 | P6000-VC |

| Adjustable Tailpieces | Product No. |
|---|---|
| Adjustable Tailpiece for Standard Flush Valve Includes Items 25-27. | P6000-J1 |
| Tailpiece Coupling Assembly Includes Items 26-28 | P6000-K |
| Tailpiece Locking Ring Includes Item 26 | P6000-C30 |
| Tailpiece O-Ring Includes Item 26 | P6000-C31 |
| Coupling Nut Includes Item 28 | P6000-C32 |
| **Flush Connections and Spud Coupling Kits** | **Product No.** |
| Flush Tube Assembly for Flush Valves Includes Items 16-20. Specify diameter and length: 1-1/2", 1-1/4", 3/4". | P6000-A |
| Vacuum Breaker Repair Kit Includes Items 16-18 | P6000-B |
| Spud Coupling Assembly Includes Items 21-24. Specify size: 1-1/2", 1-1/4", 3/4". | P6000-H |

# MetroFlush® Service Instructions

| PROBLEM | CAUSE* | CORRECTIVE ACTION |
|---|---|---|
| Valve will not operate. | 1.) Stop valve is closed.<br>2.) Supply valve is closed. | 1.) Open stop valve.<br>2.) Open supply valve. |
| Insufficient volume of water to adequately siphon fixture. | 1.) Stop valve is not open enough.<br>2.) Urinal piston installed in closet valve.<br>3.) Insufficient volume or pressure at supply. | 1.) Open stop valve for desired volume of water.<br>2.) Replace urinal piston with proper closet piston.<br>3.) Consult fixture guide for minimum gallons per minute flow and running pressure for satisfactory fixture performance. |
| Flush valve shuts off too quick. | 1.) Damaged piston.<br>2.) Enlarged by-pass orifice. | 1.) Install new P6200-EC, P6200-EU replacement kit to remedy the problem.<br>2.) Install new P6200-EC, P6200-EU replacement kit to remedy the problem. |
| Valve is short flushing. | 1.) Enlarged by-pass orifice.<br>2.) Urinal piston in closet flush valves. | 1.) Install new P6200-EC, P6200-EU replacement kit to remedy the problem.<br>2.) Install closet piston (Item #13). |
| Valve is flushing too long or not shutting off. | 1.) Trip mechanism not seating properly due to foreign material between trip mechanism and seat.<br>2.) By-pass orifice is plugged or partially plugged.<br>3.) Line pressure is not adequate to force trip mechanism to seal. | 1.) Disassemble parts and rinse thoroughly.<br>2.) Examine by-pass orifice and clean if necessary being certain not to enlarge orifice opening.<br>3.) Pressure is inadequate or has dropped below minimum operating range. Steps should be taken to increase the line pressure. |
| Water splashes out of fixture. | 1.) Supply volume is more than is necessary.<br>2.) Lime accumulation on vortex or spreader holes of fixture. | 1.) Adjust downward on control stop.<br>2.) Remove the lime build up. |
| Flush is not considered quiet. | 1.) Control stop may not be adjusted for quiet operation.<br>2.) Fixture may be contributing to noise.<br>3.) Piping system may be source of noise. | 1.) Adjust the control stop for quiet operation keeping in mind the fixture evacuation requirements.<br>2.) Check noise created by fixture by placing a cover over the bowl opening to separate valve noise from bowl noise. If it is determined the fixture is too noisy consult with fixture manufacturer.<br>3.) High pressure in the system can sometimes be controlled by the stop valve. Other sources of noise may be the absence of air chambers and shock arrestors, loose pipes, improper size pipes, etc. In these cases the building engineer should be consulted. |
| Handle assembly leaking. | 1.) Handle assembly is not tight. | 1.) Tighten handle assembly. |

**Care of Chrome Plated Surfaces**

The suggested cleaning of chrome plated surfaces is simply to clean them with mild soap and water, then dry. Commercial cleaning compounds are never recommended.

**Seasonal Use**

Valves used in installations subject to shut down because of cold and freezing conditions should be maintained in the following manner. After the main supply has been shut off and the water drained from the system, remove the stop valve cap and stop valve internals to allow the water to drain from the flush valve itself.

***ZURN PLUMBING PRODUCTS GROUP*** *COMMERCIAL BRASS OPERATION*
*5900 ELWIN BUCHANAN DRIVE, SANFORD, NC, U.S.A. 27330 PHONE: 1-800-997-3876 FAX: 919/775-3541 WEBSITE: www.zurn.com*

***In Canada:***
***ZURN INDUSTRIES LIMITED*** *3544 NASHUA DRIVE, MISSISSAUGA, ONTARIO L4V 1L2 PHONE: 905/405-8272 FAX: 905/405-1292*

© 2001 Zurn Industries, Inc. Printed in the U.S.A. Form No. FV1116, 8/01