MOEN

Buy it for looks. Buy it for life.®

Specifications

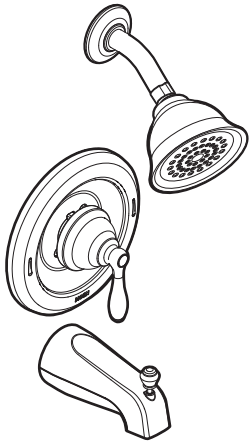

CALDWELL™
Single-Handle Tub/Shower Trim Kit
Eco-Performance

Models: 82494EP series

WaterSense Meets EPA Criteria

Certified by IAPMO R&T

DESCRIPTION
- Construction with various finishes identified by suffix
- 1/2" IPS connections
- Includes showerhead, arm, flange, and diverter tub spout

OPERATION
- Lever style handle
- Handle operates counterclockwise through a 270˚ arc with off at 6 o'clock and maximum hot at the 9 o'clock position. Shut off in clockwise direction
- Adjustable temperature limit stop to control maximum hot water temperature

FLOW
- Showerhead is limited to 2.0 gpm (7.6 L/min) maximum, 1.5 gpm (5.7 L/min) at 45 psi

STANDARDS
- Third party certified to ASME A112.18.1/CSA B-125.1 and all applicable requirements referenced therein
- **ADA** for lever handle
- Meets WaterSense® criteria
- Meets New York City Local Law No. 57

WARRANTY
- Lifetime limited warranty against leaks, drips and finish defects to the original consumer purchaser
- 5 year warranty if used in commercial installations

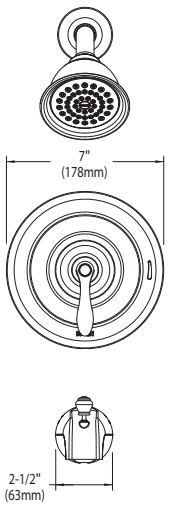

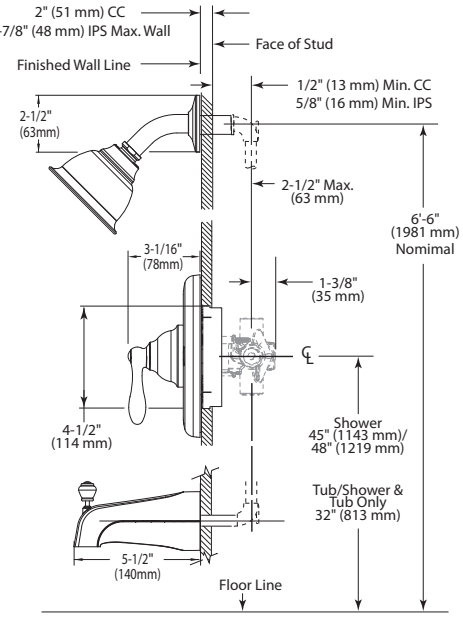

THICK WALL APPLICATION

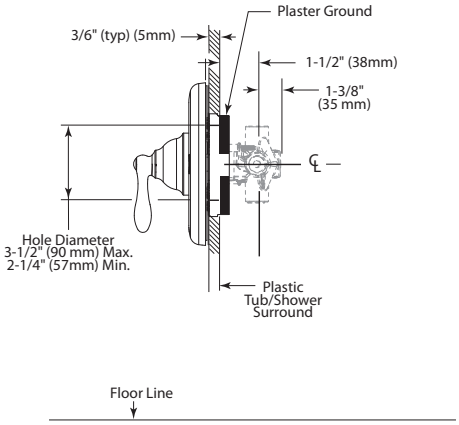

THIN WALL APPLICATION

CRITICAL DIMENSIONS

(DO NOT SCALE)

FOR MORE INFORMATION CALL: 1-800-BUY-MOEN
www.moen.com

Rev. 7/12

11/14/2012 SPC13779
Released 00