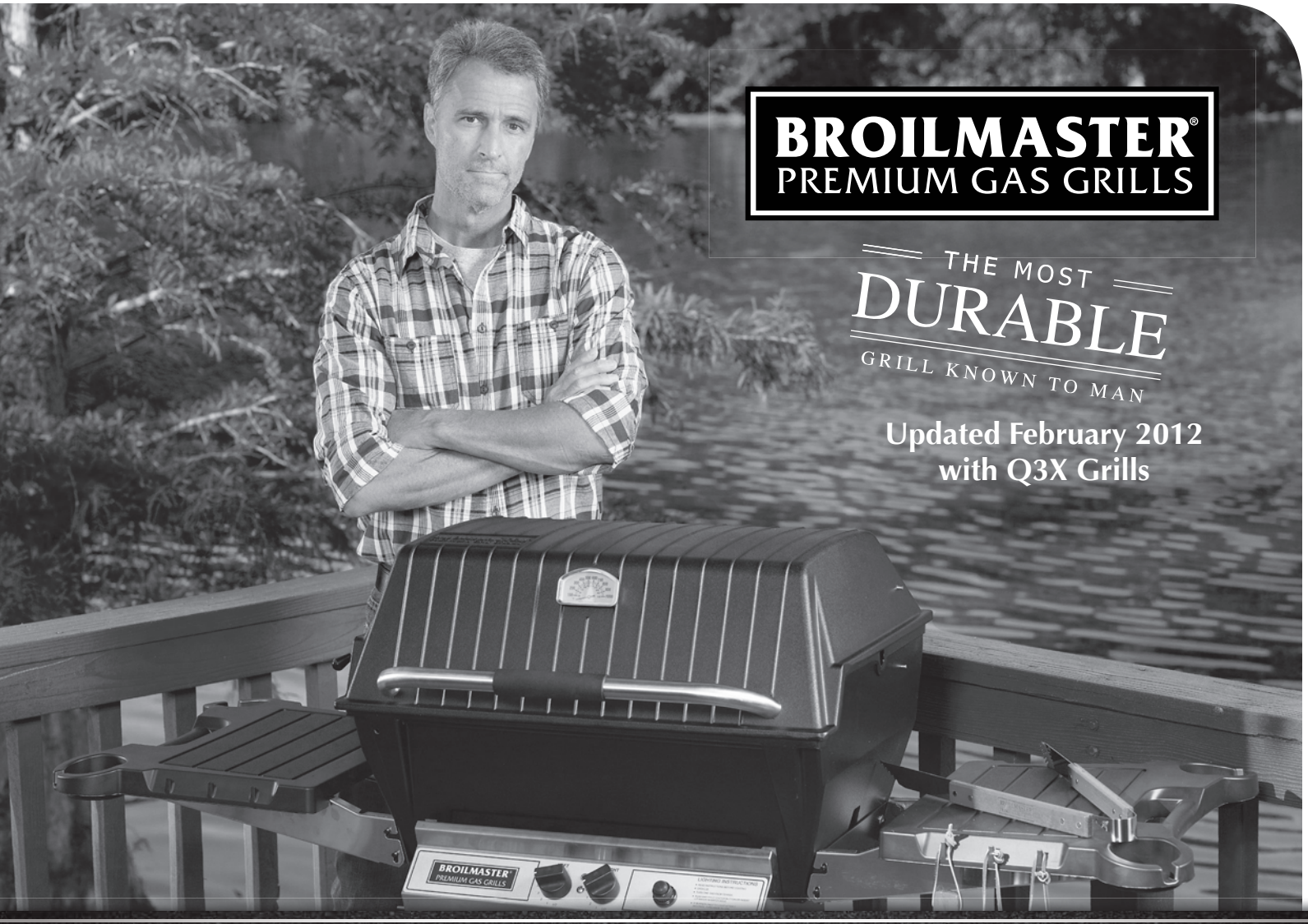

2012 Price Book

Broilmaster T-Shirts and Hats

00879

00880

00881

00882

00883

Broilmaster Apparel Program Order Form							
		$12.00 Net					
		S	M	L	XL	2XL	Total Net
00879	Crest T-Shirt - Green						
00880	Vintage T- Shirt - Gray						
00881	Bowtie T- Shirt - Black						
		$17.00 Net					
00882	Gray Mesh Cap						
		$15.00 Net					
00883	Black/White Sandwich Cap						
	Grand Total Net						$

Pricing shown is Net Pricing. Normal Broilmaster discounts do not apply.
Use this form to order. Do not include T-Shirts and hats on your grill order.

Table of Contents

Broilmaster Qrave Gas Grill Q3X – New for 2012 4
Broilmaster Qrave Gas Grill Q3X Packages – New for 2012 6
Broilmaster Premium Gas Grills P3SX, P3XF, P3X 8
Broilmaster Infrared Gas Grills R3, R3B 10
Broilmaster Premium Gas Grills P4XF, P4X 12
Broilmaster Deluxe Gas Grills H3X 14
Broilmaster H4X Deluxe Gas Grills – New for 2012 14
Broilmaster H3X Deluxe Gas Grill Packages 16
Broilmaster H4X Deluxe Gas Grill Packages – New for 2012 17
Broilmaster Side Burner (Fits all current models) 18
Broilmaster Smoker Shutter and Rotisserie 19
Broilmaster Built-In Kit for P3/H3/R3 20
Pre-2011 Broilmaster Mountings 21
Broilmaster Grill Selection Guide 22

Broilmaster Qrave Gas Grills

Includes:
Deep Cast Aluminum Grill Head
Two-Piece Stainless Steel Diamond Pattern Grids (2-Level)
Stainless Steel Oval Burner
Dual Burner Controls
Electronic Ignition
Stainless Steel Drip Pan with 3/4" Drain
Precision Probe Heat Indicator
Stainless Steel Control Panel
Stainless Steel Front-Load Smoking Chip Drawer
User's Guide

NEW IN 2012

Dimensions:
Housing 26 3/4 W x 18 3/4 D x 19 H
Total Cooking Area 420 Sq. In.

Broilmaster Q3X Qrave Gas Grills

Broilmaster Qrave Gas Grill Head - 25,000 Btu.

		Weight	List Price
Q3X	Qrave Gas Grill, Propane	105	$1,020.00
Q3XN	Qrave Gas Grill, Natural	105	$995.00
Accessories			
DPA106	Adjustable Lid Stop for Casting	3	$17.00
B072695	Stainless Steel Fold Out Extra Cooking Rack	10	$62.00
DPA119	Single Stainless Steel Rod Adjustable Cooking Grid	9	$100.00
DPA115	Stainless Steel Griddle	8	$200.00
DPA147	Scraper Tool	2	$15.00
DPA22	Flexible Bristle Brush	7	$25.00
BCK1014	Conversion Kit, LP to Natural	4	$40.00
BCK1015	Conversion Kit, Natural to LP	4	$60.00

Mountings, Shelves and Side Burners for Q3X

DCB1 Black Cart with injection molded base

PCB1 Stainless Steel Cart with injection molded base

PSCB1 Stainless Steel Storage Cart

SS48G Stainless Steel BL48G Black

SS26P Stainless Steel BL26P Black

		Weight	List Price
Mountings – Cart			
PSCB1	Stainless Steel Storage Cart/Base with Removable Casters Cart/Base fits P3, H3, Q3 only		$450.00
DCB1	Black Cart/Base with Removable Casters	26	$247.00
PCB1	Stainless Steel Cart/Base with Removable Casters	24	$289.00
Mountings – In-Ground Post			
BL48G	Black Painted Steel In-Ground Post	8	$116.00
SS48G	Stainless Steel In-Ground Post	8	$149.00
B101754	Post Extension		20.00
Mountings – Patio Post with Base			
BL26P	Black Patio Post with Cast Iron Base	5	$189.00
SS26P	Stainless Steel Patio Post with Cast Iron Base	5	$210.00

FKBLACK

FKSS

SKSS2

DPSBSS

SKFB2

SKFPB2

		Weight	List Price
Shelving – Front Shelf, Drop Down			
FKBLACK	Black Solid Surface-Drop-Down Stainless Steel Bracket	5	$75.00
FKSS	Stainless Steel-Drop-Down Stainless Steel Bracket	5	$122.00
Shelving – Side Shelf, Drop Down			
SKFB2	Drop-Down Stainless Steel Bracket, Solid Surface/Cup Holders	8	$92.00
SKFPB2	Drop-Down Painted Bracket, Solid Surface/Cup Holders	7	$66.00
Shelving – Side Shelf, Fixed			
SKSS2	Stainless Steel, Aluminum Fixed Bracket	5	$112.00
Side Burners			
DPSBSS	Side Burner, Stainless Steel, LP with Natural Conversion Kit	20	$358.00

Broilmaster Q3X Qrave Gas Grill Packages

Includes:
Deep Cast Aluminum Grill Head, Side Shelf and Cart
Two-Piece Stainless Diamond Pattern Grids (2-Level)
Stainless Steel Oval Burner
Dual Burner Controls
Electronic Ignition
Stainless Steel Drip Pan with 3/4" Drain
Precision Probe Heat Indicator
Stainless Steel Control Panel
Stainless Steel Front-Load Smoking Chip Drawer
User's Guide

NEW IN 2012

Dimensions:
Housing 26 3/4 W x 18 3/4 D x 19 H
Total Cooking Area 420 Sq. In.

Broilmaster Qrave Gas Grill Package 1, Cart/Base		**Weight**	**List Price**
Q3PK1	Qrave Gas Grill Package 1, Black Painted Cart/Base, Propane 1 Drop Down Side Shelf (SKFPB2)	113	$1,285.00

Side Burners

DPSBSS	Side Burner, Stainless Steel, LP with Natural Conversion Kit	20	$358.00

Accessories

DPA106	Adjustable Lid Stop for Casting	3	$17.00
B072695	Stainless Steel Fold Out Extra Cooking Rack	10	$62.00
DPA119	Single Stainless Steel Rod Adjustable Cooking Grid	17	$100.00
DPA115	Stainless Steel Griddle	8	$200.00
DPA147	Scraper Tool	2	$15.00
DPA22	Flexible Drain Brush	7	$25.00
BCK1014	Conversion Kit, LP to Natural	4	$40.00
BCK1015	Conversion Kit, Natural to LP	4	$60.00

Broilmaster Premium Gas Grills

All P3X Series Grills Include:
Large Cast Aluminum Grill Head
2-Piece Stainless Steel Rod Cooking Grids (adjusts 3 levels)
Stainless Steel Bowtie Burner - 45,000 Btu
Electronic Ignition
Analog Heat Indicator 100-1,000° F
Stainless Steel Control Panel
Stainless Steel Heat Shield
Stainless Steel Adjustable Lid Stop
Stainless Steel Retract-A-Rack – Folding
User's Guide

Stainless Steel Griddle

Dimensions:
Housing 26 3/4 W x 18 3/4 D x 19 H

Total Cooking Area	**695 Sq. In.**
Direct Broiling Area	442 Sq. In.
Warming Rack	253 Sq. In.

Broilmaster P3SX Super Premium Gas Grills

Broilmaster Super Premium Gas Grill Head includes Stainless Steel Griddle, Stainless Steel Smoker Shutter and Flare Buster™ Flavor Enhancers.

		Weight	List Price
P3SX	Super Premium Gas Grill with Stainless Steel Rod Grids, Propane	91	$1,437.00
P3SXN	Super Premium Gas Grill with Stainless Steel Rod Grids, Natural	91	$1,415.00
Accessories			
DPA11	Hugga-Rack Rotisserie with Flat Basket	10	$193.00
DPA51	Heavy Duty Standard Rotisserie	7	$128.00
BCK1008	Conversion Kit, LP to Natural	4	$40.00
BCK1009	Conversion Kit, Natural to LP	4	$60.00

Broilmaster P3XF Premium Gas Grills

Broilmaster Premium Gas Grill Head with Flare Buster™ Flavor Enhancers.

		Weight	List Price
P3XF	Premium Gas Grill, Propane	77	$1,112.00
P3XFN	Premium Gas Grill, Natural	77	$1,089.00
Accessories			
DPA100	Smoker Shutter	11	$158.00
DPA11	Hugga-Rack Rotisserie with Flat Basket	10	$193.00
DPA115	Stainless Steel Griddle	8	$200.00
DPA51	Heavy Duty Standard Rotisserie	7	$128.00
BCK1008	Conversion Kit, LP to Natural	4	$40.00
BCK1009	Conversion Kit, Natural to LP	4	$60.00

Broilmaster P3X Premium Gas Grills

Broilmaster Premium Gas Grill Head with Charmaster™ Briquets

		Weight	List Price
P3X	Premium Gas Grill, Propane	76	$1,049.00
P3XN	Premium Gas Grill, Natural	76	$1,028.00
Accessories			
DPA100	Smoker Shutter	11	$158.00
DPA11	Hugga-Rack Rotisserie with Flat Basket	10	$193.00
DPA115	Stainless Steel Griddle	8	$200.00
DPA51	Heavy Duty Standard Rotisserie	7	$128.00
BCK1008	Conversion Kit, LP to Natural	4	$40.00
BCK1009	Conversion Kit, Natural to LP	4	$60.00

Mountings, Shelves and Side Burners for P3 Series

DCB1 Black Cart with injection molded base

PCB1 Stainless Steel Cart with injection molded base

PSCB1 Stainless Steel Storage Cart

SS48G Stainless Steel BL48G Black

SS26P Stainless Steel BL26P Black

		Weight	List Price
Mountings – Cart			
PSCB1	Stainless Steel Storage Cart/Base with Removable Casters Cart/Base fits P3, H3, Q3 only		$450.00
DCB1	Black Cart/Base with Removable Casters	26	$247.00
PCB1	Stainless Steel Cart/Base with Removable Casters	24	$289.00
Mountings – In-Ground Post			
BL48G	Black Painted Steel In-Ground Post	8	$116.00
SS48G	Stainless Steel In-Ground Post	8	$149.00
B101754	Post Extension		20.00
Mountings – Patio Post with Base			
BL26P	Black Patio Post with Cast Iron Base	5	$189.00
SS26P	Stainless Steel Patio Post with Cast Iron Base	5	$210.00

FKBLACK

FKSS

SKSS2

DPSBSS

SKFB2

SKFPB2

		Weight	List Price
Shelving – Front Shelf, Drop Down			
FKBLACK	Black Solid Surface-Drop-Down Stainless Steel Bracket	5	$75.00
FKSS	Stainless Steel-Drop-Down Stainless Steel Bracket	5	$122.00
Shelving – Side Shelf, Drop Down			
SKFB2	Drop-Down Stainless Steel Bracket, Solid Surface/Cup Holders	8	$92.00
SKFPB2	Drop-Down Painted Bracket, Solid Surface/Cup Holders	7	$66.00
Shelving – Side Shelf, Fixed			
SKSS2	Stainless Steel, Aluminum Fixed Bracket	5	$112.00
Side Burners			
DPSBSS	Side Burner, Stainless Steel, LP with Natural Conversion Kit	20	$358.00

Broilmaster R3 Infrared Gas Grills

Includes:
Large Cast Aluminum Grill Head
2-Piece Stainless Steel Rod Cooking Grids – adjusts to 3 levels
Electronic Ignition
Analog Heat Indicator 100-1,000° F
Stainless Steel Control Panel
Stainless Steel Heat Shield
Stainless Steel Adjustable Lid Stop
Stainless Steel Retract-A-Rack – Folding
User's Guide

R3

R3B

Dimensions:

Housing	26 3/4 W x 18 3/4 D x 19 H
Total Cooking Area	**695 Sq. In.**
Direct Broiling Area	442 Sq. In.
Warming Rack	253 Sq. In.

Broilmaster R3 Infrared Gas Grills

Broilmaster Infrared Gas Grill Head includes 2 Infrared Burners

		Weight	List Price
R3	Infrared Gas Grill, Propane	81	$1,274.00
R3N	Infrared Gas Grill, Natural	81	$1,248.00
Accessories			
BCK1004	Conversion Kit, LP to Natural	4	$10.00
BCK1006	Conversion Kit, Natural to LP	4	$49.00

Broilmaster R3B Infrared Combination Gas Grills

Broilmaster Infrared Combination Gas Grill Head includes 1 Infrared Burner – 20,000 Btu, 1 Blue Flame Burner – 18,000 Btu LP or 20,000 Btu Natural Gas and Charmaster™ Briquets – Ceramic (Over Blue Flame Burner Only)

		Weight	List Price
R3B	Infrared Combination Gas Grill, Propane	87	$1,274.00
R3BN	Infrared Combination Gas Grill, Natural	87	$1,248.00
Accessories			
BCK1004	Conversion Kit, LP to Natural	4	$10.00
BCK1005	Conversion Kit, Natural to LP	4	$49.00

Mountings, Shelves and Side Burners for R3 Series

DCB1 Black Cart with injection molded base

PCB1 Stainless Steel Cart with injection molded base

PSCB1 Stainless Steel Storage Cart

SS48G Stainless Steel BL48G Black

SS26P Stainless Steel BL26P Black

	Weight	List Price
Mountings – Cart		
DCB1 ..... Black Cart/Base with Removable Casters	26	$247.00
PCB1 ..... Stainless Steel Cart/Base with Removable Casters	24	$289.00
Mountings – In-Ground Post		
BL48G..... Black Painted Steel In-Ground Post	8	$116.00
SS48G..... Stainless Steel In-Ground Post	8	$149.00
B101754 ..... Post Extension		20.00
Mountings – Patio Post with Base		
BL26P..... Black Patio Post with Cast Iron Base	5	$189.00
SS26P ..... Stainless Steel Patio Post with Cast Iron Base	5	$210.00

FKBLACK

FKSS

SKSS2

DPSBSS

SKFB2

SKFPB2

	Weight	List Price
Shelving – Front Shelf, Drop Down		
FKBLACK..... Black Solid Surface-Drop-Down Stainless Steel Bracket	5	$75.00
FKSS..... Stainless Steel-Drop-Down Stainless Steel Bracket	5	$122.00
Shelving – Side Shelf, Drop Down		
SKFB2 ..... Drop-Down Stainless Steel Bracket, Solid Surface/Cup Holders	8	$92.00
SKFPB2 ..... Drop-Down Painted Bracket, Solid Surface/Cup Holders	7	$66.00
Shelving – Side Shelf, Fixed		
SKSS2..... Stainless Steel, Aluminum Fixed Bracket	5	$112.00
Side Burners		
DPSBSS..... Side Burner, Stainless Steel, LP with Natural Conversion Kit	20	$358.00

Broilmaster P4 Premium Gas Grills

Includes:
Cast Aluminum Grill Head
2-Piece Stainless Steel Rod Cooking Grids – adjusts to 2 levels
Stainless Steel Bowtie Burner - 40,000 Btu
Electronic Ignition
Analog Heat Indicator 100-1,000° F
Stainless Steel Control Panel
Stainless Steel Heat Shield
Stainless Steel Adjustable Lid Stop
Stainless Steel Retract-A-Rack – Non-Folding
User's Guide

Dimensions:

Housing	24 W x 16 1/4 D x 19 H
Total Cooking Area	**473 Sq. In.**
Direct Broiling Area	360 Sq. In.
Warming Rack	113 Sq. In.

Broilmaster P4XF Premium Gas Grills

Broilmaster Premium Gas Grill Head with Flare Buster™ Flavor Enhancer

		Weight	List Price
P4XF	Premium Gas Grill, Propane	64	$1,028.00
P4XFN	Premium Gas Grill, Natural	64	$1,003.00
Accessories			
DPA11	Hugga-Rack Rotisserie with Flat Basket	10	$193.00
DPA51	Heavy Duty Standard Rotisserie	7	$128.00
BCK1010	Conversion Kit, LP to Natural	4	$40.00
BCK1011	Conversion Kit, Natural to LP	4	$60.00

Broilmaster P4X Premium Gas Grills

Broilmaster Premium Gas Grill Head with Charmaster™ Briquets

		Weight	List Price
P4X	Premium Gas Grill, Propane	63	$976.00
P4XN	Premium Gas Grill, Natural	63	$943.00
Accessories			
DPA11	Hugga-Rack Rotisserie with Flat Basket	10	$193.00
DPA117	Flare Busters ™ Flavor Enhancer Kit for P4	1	$57.00
DPA51	Heavy Duty Standard Rotisserie	7	$128.00
GR4	Griddle for Size 4 Grill Head	10	$66.00
BCK1010	Conversion Kit, LP to Natural	4	$40.00
BCK1011	Conversion Kit, Natural to LP	4	$60.00

Mountings, Shelves and Side Burners for P4 Series

DCB1 Black Cart with injection molded base

PCB1 Stainless Steel Cart with injection molded base

PSCB1 Stainless Steel Storage Cart

SS48G Stainless Steel BL48G Black

SS26P Stainless Steel BL26P Black

		Weight	List Price
Mountings – Cart			
DCB1	Black Cart/Base with Removable Casters	26	$247.00
PCB1	Stainless Steel Cart/Base with Removable Casters	24	$289.00
Mountings – In-Ground Post			
BL48G	Black Painted Steel In-Ground Post	8	$116.00
SS48G	Stainless Steel In-Ground Post	8	$149.00
B101754	Post Extension		20.00
Mountings – Patio Post with Base			
BL26P	Black Patio Post with Cast Iron Base	5	$189.00
SS26P	Stainless Steel Patio Post with Cast Iron Base	5	$210.00

FKBLACK

FKSS

SKSS2

DPSBSS

SKFB2

SKFPB2

		Weight	List Price
Shelving – Front Shelf, Drop Down			
FKBLACK	Black Solid Surface-Drop-Down Stainless Steel Bracket	5	$75.00
FKSS	Stainless Steel-Drop-Down Stainless Steel Bracket	5	$122.00
Shelving – Side Shelf, Drop Down			
SKFB2	Drop-Down Stainless Steel Bracket, Solid Surface/Cup Holders	8	$92.00
SKFPB2	Drop-Down Painted Bracket, Solid Surface/Cup Holders	7	$66.00
Shelving – Side Shelf, Fixed			
SKSS2	Stainless Steel, Aluminum Fixed Bracket	5	$112.00
Side Burners			
DPSBSS	Side Burner, Stainless Steel, LP with Natural Conversion Kit	20	$358.00

Broilmaster H Series Deluxe Gas Grills

Includes:
Cast Aluminum Grill Head
2-Piece Stainless Steel Rod Cooking Grids – Single-Level
Stainless Steel "H" Burner
Electronic Ignition
Charmaster™ Briquets
Analog Heat Indicator 100-1,000° F
Stainless Steel Control Panel
Stainless Steel Heat Shield
Chrome-Plated Retract-A-Rack – Non-Folding
User's Guide

Dimensions:
Housing 26 3/4 W x 18 3/4 D x 19 H

Total Cooking Area	**653 Sq. In.**
Direct Broiling Area	400 Sq. In.
Warming Rack	253 Sq. In.

Broilmaster H3X Series Deluxe Gas Grills

Broilmaster Deluxe Gas Grill Head – 40,000 Btu

		Weight	List Price
H3X	Deluxe Gas Grill, Propane	105	$887.00
H3XN	Deluxe Gas Grill, Natural	105	$861.00
Accessories			
DPA106	Adjustable Lid Stop for Casting	3	$17.00
DPA11	Hugga-Rack Rotisserie with Flat Basket	10	$193.00
DPA111	Stainless Steel Adjustable Cooking Grids	17	$158.00
DPA115	Stainless Steel Griddle	8	$200.00
DPA116	Flare Busters™ Flavor Enhancer Ceramic Pads DPA103	2	$61.00
DPA51	Heavy Duty Standard Rotisserie	7	$128.00
BCK1010	Conversion Kit, LP to Natural	4	$40.00
BCK1011	Conversion Kit, Natural to LP	4	$60.00

Broilmaster H4X Series Deluxe Gas Grills

Dimensions:
Housing 24 W x 16 1/4 D x 19 H

Total Cooking Area	**473 Sq. In.**
Direct Broiling Area	360 Sq. In.
Warming Rack	113 Sq. In.

NEW IN 2012

Broilmaster Deluxe Gas Grill Head – 36,000 Btu

		Weight	List Price
H4X	Deluxe Gas Grill, Propane	64	$834.00
H4XN	Deluxe Gas Grill, Natural	64	$810.00
Accessories			
DPA106	Adjustable Lid Stop for Casting	3	$17.00
DPA11	Hugga-Rack Rotisserie with Flat Basket	10	$193.00
DPA112	Set of 2 Stainless Steel Rod Multi-Level Cooking Grids	17	$133.00
DPA117	Flare Busters™ Flavor Enhancer Ceramic Pads	1	$57.00
DPA51	Heavy Duty Standard Rotisserie	7	$128.00
BCK1012	Conversion Kit, LP to Natural	4	$40.00
BCK1013	Conversion Kit, Natural to LP	4	$60.00

Mountings, Shelves and Side Burners for H3X and H4X Series

DCB1 Black Cart with injection molded base

PCB1 Stainless Steel Cart with injection molded base

PSCB1 Stainless Steel Storage Cart Fits H3 Size Only

SS48G Stainless Steel BL48G Black

SS26P Stainless Steel BL26P Black

		Weight	List Price
Mountings – Cart			
PSCB1	Stainless Steel Storage Cart/Base with Removable Casters Cart/Base fits P3, H3, Q3 only		$450.00
DCB1	Black Cart/Base with Removable Casters	26	$247.00
PCB1	Stainless Steel Cart/Base with Removable Casters	24	$289.00
Mountings – In-Ground Post			
BL48G	Black Painted Steel In-Ground Post	8	$116.00
SS48G	Stainless Steel In-Ground Post	8	$149.00
B101754	Post Extension		20.00
Mountings – Patio Post with Base			
BL26P	Black Patio Post with Cast Iron Base	5	$189.00
SS26P	Stainless Steel Patio Post with Cast Iron Base	5	$210.00

FKBLACK

FKSS

SKSS2

DPSBSS

SKFB2

SKFPB2

		Weight	List Price
Shelving – Front Shelf, Drop Down			
FKBLACK	Black Solid Surface-Drop-Down Stainless Steel Bracket	5	$75.00
FKSS	Stainless Steel-Drop-Down Stainless Steel Bracket	5	$122.00
Shelving – Side Shelf, Drop Down			
SKFB2	Drop-Down Stainless Steel Bracket, Solid Surface/Cup Holders	8	$92.00
SKFPB2	Drop-Down Painted Bracket, Solid Surface/Cup Holders	7	$66.00
Shelving – Side Shelf, Fixed			
SKSS2	Stainless Steel, Aluminum Fixed Bracket	5	$112.00
Side Burners			
DPSBSS	Side Burner, Stainless Steel, LP with Natural Conversion Kit	20	$358.00

Broilmaster H3X Deluxe Gas Grill Packages

Includes:
Cast Aluminum Grill Head, Side Shelf, and Mounting
2-Piece Stainless Steel Rod Cooking Grids – Single-Level
Stainless Steel "H" Burner - 40,000 Btu
Electronic Ignition
Charmaster™ Briquets
Analog Heat Indicator 100-1,000° F
Stainless Steel Control Panel
Stainless Steel Heat Shield
Chrome-Plated Retract-A-Rack – Non-Folding
User's Guide

Dimensions:
Housing 26 3/4 W x 18 3/4 D x 19 H

Total Cooking Area	**653 Sq. In.**
Direct Broiling Area	400 Sq. In.
Warming Rack	253 Sq. In.

Broilmaster Deluxe Gas Grill Package 1, Cart/Base		**Weight**	**List Price**
H3PK1	Deluxe Gas Grill Package 1, Black Painted Cart/Base, Propane 1 Drop Down Side Shelf (SKFPB2)	113	$1,140.00
H3PK1N	Deluxe Gas Grill Package 1 Black Cart/Base, Natural 1 Drop Down Side Shelf (SKFPB2)	113	$1,115.00
Broilmaster Deluxe Gas Grill Package 2 – with 2-Piece In-Ground Post			
H3PK2N	Deluxe Gas Grill Package 2, 2-Piece In-Ground Post, Natural 1 Drop Down Side Shelf (SKFPB2)	93	$990.00
Broilmaster Deluxe Gas Grill Package 3 – with 26-inch Patio Post with Base			
H3PK3N	Deluxe Gas Grill Package 3, Patio/Base (BL26P), Natural 1 Drop Down Side Shelf (SKFPB2)	121	$1,060.00
Side Burners			
DPSBSS	Side Burner, Stainless Steel, LP with Natural Conversion Kit	20	$358.00
Accessories			
DPA106	Adjustable Lid Stop	3	$17.00
DPA11	Hugga-Rack Rotisserie with Flat Basket	10	$193.00
DPA111	Stainless Steel Adjustable Cooking Grids	17	$158.00
DPA115	Stainless Steel Griddle	8	$200.00
DPA116	Flare Busters ™ Flavor Enhancer Ceramic Pads DPA103	2	$61.00
DPA51	Heavy Duty Standard Rotisserie	7	$128.00
BCK1010	Conversion Kit, LP to Natural	4	$40.00
BCK1011	Conversion Kit, Natural to LP	4	$60.00
NG12	12 ft. Natural Gas Hose and Quick Connect	4	$102.00

Includes:
Cast Aluminum Grill Head, Side Shelf, and Mounting
2-Piece Stainless Steel Rod Cooking Grids – Single-Level
Stainless Steel "H" Burner - 36,000 Btu
Electronic Ignition
Charmaster™ Briquets
Analog Heat Indicator 100-1,000° F
Stainless Steel Control Panel
Stainless Steel Heat Shield
Chrome-Plated Retract-A-Rack – Non-Folding
User's Guide

NEW IN 2012

Dimensions:
Housing 24 W x 16 1/4 D x 19 H
Total Cooking Area 473 Sq. In.
Direct Broiling Area 360 Sq. In.
Warming Rack 113 Sq. In.

Broilmaster Deluxe Gas Grill Package 1, Cart/Base		**Weight**	**List Price**
H4PK1	Deluxe Gas Grill Package 1, Black Painted Cart/Base, Propane 1 Drop Down Side Shelf (SKFPB2)	100	$1,090.00
H4PK1N	Deluxe Gas Grill Package 1 Black Cart/Base, Natural 1 Drop Down Side Shelf (SKFPB2)	100	$1,065.00
Broilmaster Deluxe Gas Grill Package 2 – with 2-Piece In-Ground Post			
H4PK2N	Deluxe Gas Grill Package 2, 2-Piece In-Ground Post, Natural 1 Drop Down Side Shelf (SKFPB2)	93	$940.00
Broilmaster Deluxe Gas Grill Package 3 – with 26-inch Patio Post with Base			
H4PK3N	Deluxe Gas Grill Package 3, Patio/Base (BL26P), Natural 1 Drop Down Side Shelf (SKFPB2)	105	$1,010.00
Side Burners			
DPSBSS	Side Burner, Stainless Steel, LP with Natural Conversion Kit	20	$358.00
Accessories			
DPA106	Adjustable Lid Stop	3	$17.00
DPA11	Hugga-Rack Rotisserie with Flat Basket	10	$193.00
DPA112	Set of 2 Stainless Steel Rod Multi-Level Cooking Grids	17	$133.00
DPA117	Flare Busters ™ Flavor Enhancer Ceramic Pads	1	$57.00
DPA51	Heavy Duty Standard Rotisserie	7	$128.00
GR4	Griddle for Size 4 Grill Head	10	$66.00
BCK1012	Conversion Kit, LP to Natural	4	$40.00
BCK1013	Conversion Kit, Natural to LP	4	$60.00
NG12	12 ft. Natural Gas Hose and Quick Connect	4	$102.00

Broilmaster Side Burner (Fits all current models)		
Model	**DPSBSS**	**DPA-SBC**
List Price	**$358.00**	**$125.00**
Btu	11,000 Btu	13,000 Btu
Materials	Stainless Steel	Stainless Steel
Width & Depth	12 1/2 x 17	14 3/4 x 14
Shipping Weight (lb.)	20	11
	• For use with Broilmaster Grill on a Post or Cart	• For use in any Grill Island. Requires BSA Stainless Steel Side Burner Kit. ($99.00) • Fits Superb SBG 2500, SBG 2501, and SBG 2801 – without BSA Kit

Broilmaster Smoker Shutter and Rotisserie

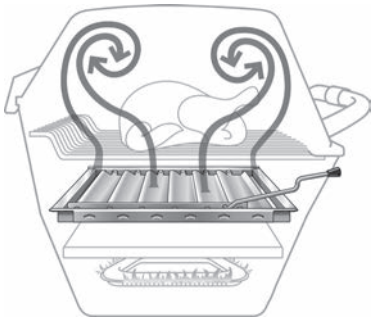

Closed

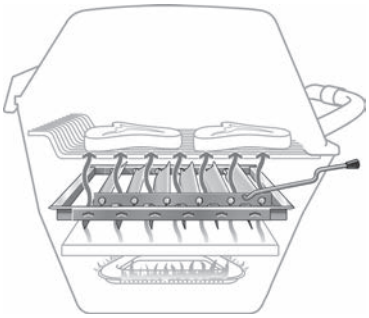

Open

Model	**DPA100** **Stainless Steel Smoker Shutter**
List Price	**$158.00**
Shipping Weight (lb.)	**11**

The Smoker Shutter is included with P3S.
It is an accessory for all P3 grills.
The Smoker Shutter may not be installed in an R3, R3B or Q3 grill.
The Smoker Shutter will not fit the P4, H3 or H4 grill.

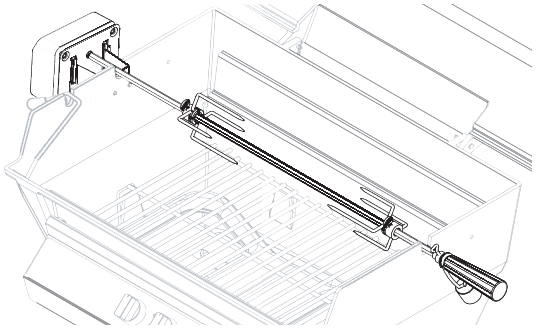

Model	**DPA11** **Hugga-Rack® Rotisserie with Flat Basket**	**DPA51** **Heavy-Duty Standard Rotisserie**
List Price	**$193.00**	**$128.00**
Shipping Weight (lb.)	**10**	**7**

Heavy-Duty Conventional Rotisserie with motor, rod, tines and counterbalance.
Hugga-Rack® Rotisserie clamps food in a sturdy stainless steel basket and ensures self-basting, gourmet results with no monitoring. Includes motor.
Both Rotisseries fit P3, P4 and H3 grills.

Broilmaster Built-In Kit for P3/H3/R3

Model	Description	Ship Weight	List Price
A **BHA**	Stainless Steel Broilmaster Built-In Kit for R3, and R3B Grill Head	27	**$305.00**
A **BHAX**	Stainless Steel Broilmaster Built-In Kit for P3-X and H3-X Grill Head	27	**$305.00**
B **BDA**	Stainless Steel Door Kit (one door with frame, use alone or in pairs)	10	**$305.00**
C **BSA**	Stainless Steel Side Burner Kit (Requires DPA-SBC)	3	**$101.00**
D **DPA-SBC**	Stainless Steel Side Burner, 13,000 Btu (Requires BSA)	11	**$125.00**
E **BBA**	Stainless Steel Tilt-Out LP Tank Door	19	**$305.00**
BRB	Stainless Steel Register Kit (Required for island ventilation with LP tank, includes 2 registers)	1	**$46.00**

		Opening Required (inches)			Stainless Steel Frame Dimension (inches)		
		Height	**Width**	**Depth**	**Height**	**Width**	**Depth**
BHA	Broilmaster Built-In Surround for R3	14	26 13/16	15 3/8	14 3/8	28 15/16	16
BHAX	Broilmaster Built-In Surround for P3-X and H3-X	14	26 13/16	15 3/8	14 3/8	28 15/16	16
BDA	Door Kit (single door)	19 13/16	14		21 9/16	16 9/16	
BDA	Two Door Kits Mounted Together (shown)	19 13/16	27 1/2		21 9/16	30 3/16	
BSA	Side Burner Housing		12 3/16	14 3/8		15	17 1/4
BBA	Tilt-Out LP Tank Door	24 13/16	13 15/16		26 9/16	16 5/8	
BRB	Register	2 1/4	10		3	11 9/16	
Limited Lifetime Warranty on Built-In Components							

Broilmaster Grill Selection Guide

Model	Btu	Total Cooking Area (Sq. In.)	Burner	Cooking Grids	Control Panel	Stainless Steel Lid Stop	Stainless Steel Smoker Shutter	Flavor Enhancer	Warming Rack	Stainless Steel Griddle	Page Number
Qrave Q Series											
Q3X	25,000	420	SS Oval	SSD	SS	Accy.	NA	NA	Accy.	Accy.	4
Super Premium Series											
P3SX	45,000	695	SS Bowtie	SSR	SS	✓	✓	FBC	SSF	✓	8
Infrared Series											
R3	40,000	695	IR	SSR	SS	✓	NA	NA	SSF	NA	10
R3B	40,000	695	IR/SS Tube	SSR	SS	✓	NA	CMB(1/2)	SSF	Accy.*	10
Premium Series											
P3XF	45,000	695	SS Bowtie	SSR	SS	✓	Accy.	FBC	SSF	Accy.	8
P3X	45,000	695	SS Bowtie	SSR	SS	✓	Accy.	CMB	SSF	Accy.	8
P4XF	40,000	473	SS Bowtie	SSR	SS	✓	NA	FBC	SS	NA	12
P4X	40,000	473	SS Bowtie	SSR	SS	✓	NA	CMB	SS	NA	12
Deluxe Series											
H3X	40,000	653	SS H Burner	SSR1	SS	Accy.	NA	CMB	CHM	Accy.	14
H4X	36,000	473	SS H Burner	SSR1	SS	Accy.	NA	CMB	CHM	NA	14

SS Stainless Steel
SSR Stainless Steel Rod-Multi-Level, 5/16-inch Rods
SSF Stainless Steel Retract-A-Rack, Folding
SSR1 Stainless Steel Rod Single-Level, 1/4-inch Rods
SSD Stainless Steel Adjustable Diamond Pattern Cooking Grids

CMB Charmaster™ Briquets
FBC Flare Busters™ Flavor Enhancers
CHM Chrome-Plated Retract-A-Rack, Non-Folding
IR Infrared Burner

* On R3B, Griddle may be used over Blue-Flame burner only.

• "X" model grills fit the new carts and posts only.

• Grills manufactured before 2011 require control panel cover (see Mounting page).

• R3 and R3B grills include a control panel cover to allow them to fit new mountings and previous generation mountings.

Grills do not include conversions kits. Please specify gas type when ordering.

Pre-2011 Broilmaster Mountings

To install a Pre-2011 Broilmaster Grill on a new post, you will need a cover plate to conceal the gas lines. Please order the Stainless Steel Control Cover, Part Number B101668.

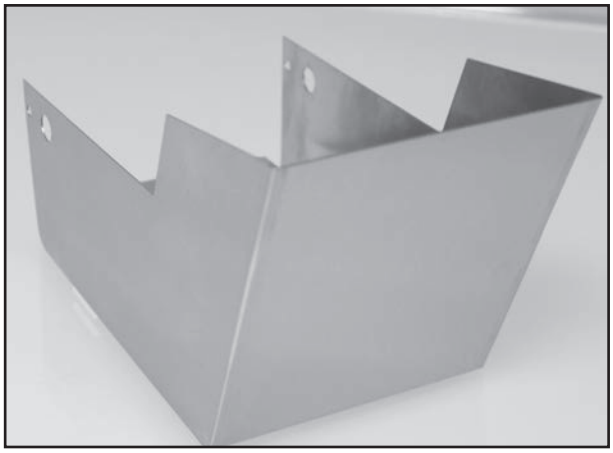

To install a Pre-2011 Broilmaster Grill on a new cart, you will need a control cover plate to conceal the gas lines. Please order Stainless Steel Control Cover, Part Number B101121

Accessories
and
Most Requested Parts

Table of Contents

Contents

Grill Covers (Available in Black Only) 25
Grill Tools 25
Rotisseries 25
Smoker Shutter 25
Flavor Screens & Briquets 25
Hose & Regulator 26
Single Porcelain-Coated Cast Iron Cooking Grids 26
Single Stainless Steel Rod Cooking Grids 26
Casting Handles & Lid Stop 27
Castings - Aluminum 27
Burners 28
Control Panel Assemblies & Labels 29
Conversion Kits (Natural to Propane) 30
Conversion Kits (Propane to Natural) 30
Side Shelf Kits 31
Front Shelf Components 31
Front Shelf Bracket 31
Hardware 32
Heat Indicators 32
Heat Shields 32
Ignitors 33
Carts 34
Patio Post (2011 & Newer) 34
In-Ground Post (2011 & Newer) 34
Mounting Repair Parts - Patio Post (2010 and Prior) 34
Mounting Repair Parts - In-Ground Post 34
Control Housing/Cover Plates 35
Pull Handles 35
Rotisserie Parts 36
Hugga-Rack® (DPA11) 36
Valves 37
Valves & Knobs 37
Warming Racks 37
Grease Cups/Trays 38
Hoses/Regulators 38
Paint 38
Channel Edge Protector 38
Cart Shield 38

Broilmaster Accessories

Grill Covers (Available in Black Only)

Model	Description	Wt.	List Price
DPA109	Full Length Broilmaster Premium Grill Cover for Broilmaster Grill with One Cup-Holder Side Shelf	2	$55.00
DPA110	Full Length Broilmaster Premium Grill Cover for P, H, and R with Two Cup-Holder Side Shelves	5	$61.00
DPA45	Built-In Kit Premium Grill Cover for P3, H3, and R3 Head Built-In Island Covers Head and Control Panel	4	$48.00
DPA8	Full Length Broilmaster Premium Grill Cover for P, H, and R without Side Shelves	4	$50.00

Grill Tools

Model	Description	Wt.	List Price
DPA107	Grid Lifter Kit	3	$16.00
DPA20	Professional Quality 4-Piece BBQ Set with Spatula Tong, Fork, and Brush with Broilmaster Logo burned into Rosewood Handles	5	$56.00
DPA27	Cast Iron Smoker Box. Use with all Wood Chips	4	$23.00

Rotisseries

Model	Description	Wt.	List Price
DPA11	Hugga-Rack Rotisserie with Flat Basket for P3/P4, T3, H3/H4	10	$193.00
DPA51	Heavy-Duty Standard Rotisserie for P3/P4, T3, and H3	7	$128.00

Smoker Shutter

The Smoker Shutter is included with P3SX. It is an accessory for all P3 grills. The Smoker Shutter should not be installed in an R3 grill. The Smoker Shutter will not fit the P4 and H4 Grills. Smoker Shutter may be used in H3X only with DPA101 Cooking Grids.

Model	Description	Wt.	List Price
DPA100	Smoker Shutter for P3, T3, D3 (H3 requires DPA101 Grids)	11	$158.00
DPA27	Cast Iron Smoker Box. Use with all Wood Chips	4	$23.00

Flavor Screens & Briquets

Model	Description	Wt.	List Price
B067449	Briquet Rack (Porcelain Enameled Steel Rod) for P4, D4, G4, H4	8	$35.00
B070404	Briquet Rack for P5, D5 and S5	8	$28.00
B101061	Briquet Rack (Porcelain Enameled Steel Rod) for P3, G3, D3, T3, H3	8	$40.00
B101279	Briquet Rack for R3B Only - Covers Blue Flame Burner Side		$20.00
DPA103	Flavor Screen for P3, H3, T3 grill head	5	$111.00
DPA104	Flavor Screen for P4 and H4 grill head	5	$103.00
DPA116	Flare Busters Flat Ceramic for P3, T3, D3, H3 Grill Heads (Requires B101061 Rack)	2	$61.00
DPA117	Flare Busters Flat Ceramic for P4, H4 and D4 Grill Heads (Requires B067449 Rack)	1	$57.00
DPA34	Charmaster™ Briquets	15	$22.00

Broilmaster Accessories

Hose & Regulator

Model	Description	Wt.	List Price
B059605	Hansen Quick-Connect only (Natural models) (formally 10006PSDC2HKR)		$30.00
B069756	LP Hose and Regulator		$25.00
DPA105	Natural Gas Regulator Kit	3	$20.00
NG12	12 ft. Natural Gas Hose and Quick Connect	4	$102.00

Grid Sets and Individual Grids

Cooking Grid Sets and Griddles

Model	Description	Wt.	List Price
DPA101	Set of 3 Cast Stainless Steel Cooking Grids for Size 3 Grill Head	26	$323.00
DPA111	Set of 2 Stainless Steel Rod Cooking Grids for Size 3 Grill Head	17	$158.00
DPA113	Set of 2 Stainless Steel Single-Level Cooking Grids for H3 Grill Head	10	$100.00
DPP103	Set of 2 Porcelainized Cast Iron Cooking Grids for Size 3 Grill Head	27	$155.00
DPA102	Set of 3 Cast Stainless Steel Cooking Grids for Size 4 Grill Head	26	$276.00
DPA112	Set of 2 Stainless Steel Rod Cooking Grids for Size 4 Grill Head	17	$133.00
DPP12	Set of 3 Porcelain-Coated Cast Iron Cooking Grids for P4	26	$142.00
DPA114	Set of 2 Stainless Steel Single-Level Cooking Grids for H4 Grill Head		$90.00
DPA115	Stainless Steel Griddle for P3, H3, R3B	8	$200.00
GR4	Griddle for Size 4 Grill Head	10	$66.00

Single Grid

Model	Description	List Price
B100589	Single Grid, Cast Stainless Steel Size 3 Grills	$108.00
B101282	Single Stainless Steel Rod Multi-Level Cooking Grid for Size 3 Grill Head (2 Required)	$78.00
B101397	Single Grid for H3X, Stainless Steel Rod (2 Required) - New for 2012	$86.00

Single Porcelain-Coated Cast Iron Cooking Grids

B100591	Single Grid, Cast Stainless Steel for Size 4 Grill Head	$84.00
B101321	Single Stainless Steel Rod Multi-Level Cooking Grid for Size 4 Grill Head (2 Required)	$65.00
B100497	Single Porcelain-Coated Cast Iron Cooking Grid for Size 4 Grill Head (3 Required)	$48.00

Single Stainless Steel Rod Cooking Grids

B878361	Single Stainless Steel Rod Cooking Grid for S5/D5/P5 (2 Required)	$55.00

Non-current production items are limited and are subject to substitution or deletion.
Porcelain-Coated Cast Iron and Cast Stainless Steel Grids should not be used in R3 or R3B grills.

* DPA115 Griddle, fits P3, H3 and R3B. Not for use with R3 grills
** GR4 Griddle fits P4. (Limited Quantities)

Casting Handles & Lid Stop

Model	Description	Wt.	List Price
Casting Handles & Lid Stop			
B073097	Foam Grip for Stainless Steel Handles P3, H3, P4, P5		$4.75
B076793	Short Stainless Steel Handle with Bolts and Grip for P3/P4/P5, S5/D5		$60.00
DPA106	Adjustable Lid Stop for Casting	3	$17.00

Castings - Aluminum

Model	Description	Wt.	List Price
Castings - Aluminum			
P3X, H3X, (Black Only)			
B100453	Casting, Top with Hinge Pins & Heat Indicator for Black P3, D3, T3, R3		$222.00
B101418	Casting, Bottom - New for 2012		$258.00
P3, D3			
B100453	Casting, Top with Hinge Pins & Heat Indicator for Black P3, D3, T3, R3		$222.00
B100460	Casting, Bottom with Hinge Pins P3BL-1/P3BL/D3		$258.00
T3, R3			
B100453	Casting, Top with Hinge Pins & Heat Indicator for Black P3, D3, T3, R3		$222.00
B101044	Casting, Bottom for P3, D3, T3, R3		$258.00
P4X, H4X, (Black Only)			
B073286	Casting, Top P4BL/D4		$175.00
B101443	Casting, bottom, Black P4X, H4X - New for 2012		$258.00
P4, D4			
B073286	Casting, Top		$175.00
B073287	Casting, Bottom, Black P4		$240.00
S5			
B100062	Casting, Top, No Heat Indicator S5/ D5		$131.00
B100063	Casting, Bottom, Painted S5/D5		$142.00

Aluminum Casting - Unless noted, Top Casting includes hinge pins and heat indicator. Bottom Casting includes hinge pins; Castings may required modification when used on other than “P” and “D” series grills.

Non-current production items are limited and are subject to substitution or deletion.

Burners

Model	Description	Wt.	List Price
Burners			
DPP101	Stainless Steel Bowtie Burner Set P3/D3 (Pre-2011)	5	$108.00
DPP102	Stainless Steel Bowtie Burner Set P4/D4	5	$93.00
DPP104	Set of 2 Stainless Steel Tube Burner T3	5	$76.00
DPP109	Stainless Steel H Burner for H3X		$82.00
DPP110	Stainless Steel H Burner Set H4X - New for 2012	3	$78.00
DPP111	Stainless Steel Bowtie Burner Set P3X - New for 2012	5	$93.00
DPP112	Stainless Steel Bowtie Burner Set P4X - New for 2012	5	$93.00
B101269	Infrared Burner (1 required for R3B, 2 required for R3)	6	$212.00
B053791	Stainless Steel Bowtie Burner Set P5, D5, S5	4	$89.00
B100245	B692695BURNER Left Stainless Steel Burner 45° G2000DX		$89.00
B100247	DPP1, G3EX, G1000EX Single Stainless Steel Burner		$89.00
B100473	Twin Venturi only, new style P3, P4, D3, D4		$15.00
B048474	S5 Venturi		$24.00
B72321	Single Gasket G3EX, G1000EX		$1.00
B885005	Double Gasket P3, P4, P5, D3, D4, D5		$2.00
B100477	Hardware Pack (Gasket & Screws) P3, P4, D3, D4		$2.50
B101030	T3 Stainless Steel Burner (Single Piece, 2 required)	2	$47.00
B8467	Single Straight Venturi, DPP1		$46.00
B906236	Burner Stabilizer Kit (pre-2002 Grills)		$5.00
B101399	Venturi for P3X, H3X		$15.00
B101394	Venturi for P4X, H4X		$15.00

Non-current production items are limited and are subject to substitution or deletion.

Control Panel Assemblies & Labels

Model	Description	List Price
Control Panel Assemblies & Labels		
P3		
B100751	Control Panel & Label Assembly, Stainless Steel (Electronic Ignitor)	$54.00
B101380	Control Panel & Label Assembly, Stainless Steel (Rotary Ignitor)	$62.00
B101381	Control Panel & Label Assembly, Stainless Steel (No Ignitor)	$62.00
P3, D3		
B063235	Label (Rotary Ignitor)	$11.00
B072686	Label (Electronic Ignitor)	$11.00
B072705	Label (No Ignitor)	$11.00
P3X/H3X		
B101514	Control Panel and Label Stainless Steel (Electronic Ignitor)	$62.00
B101517	Label	$11.00
D3		
B100753	Control Panel & Label Assembly, Black (Electronic Ignitor)	$44.00
B101386	Control Panel & Label Assembly, Black (Rotary Ignitor)	$44.00
B101387	Control Panel & Label Assembly, Black (No Ignitor)	$44.00
P4X		
B101515	Control Panel & Label, Assembly, Stainless Steel - New for 2012	$54.00
B101518	Label - New for 2012	$11.00
P4		
B100752	Control Panel & Label Assembly, Stainless Steel (Electronic Ignitor)	$53.00
B101382	Control Panel & Label Assembly, Stainless Steel (Rotary Ignitor)	$62.00
B101383	Control Panel & Label Assembly, Stainless Steel (No Ignitor)	$54.00
P4, D4		
B067445	Label (Rotary Ignitor)	$10.00
B072197	Label (Electronic Ignitor)	$10.00
B072704	Label (No Ignitor)	$11.00
P4X, H4X		
B101515	Control Panel and Label Stainless Steel (Electronic)	$54.00
B101518	Label	$11.00
D4		
B100754	Control Panel & Label Assembly, Black (Electronic Ignitor)	$44.00
B101388	Control Panel & Label Assembly, Black (Rotary Ignitor)	$44.00
B101389	Control Panel & Label Assembly (No Ignitor)	$44.00
P5, D5, S5		
B070564	Label (Rotary Ignitor)	$10.00
B072682	Label (Electronic Ignitor)	$10.00
B101384	Control Panel & Label Assembly, Stainless Steel (Electronic Ignitor)	$54.00
B101385	Control Panel & Label Assembly, Stainless Steel (Rotary Ignitor)	$54.00
T3, R3		
B101028	Label (Electronic Ignitor)	$16.00
B101390	Control Panel & Label Assembly, Stainless Steel (Electronic Ignitor)	$54.00
Side Burner		
B070488	Side Burner Control Panel Label (Rotary Ignitor)	$7.00
B072698	Label (Electronic Ignitor)	$11.00

Non-current production items are limited and are subject to substitution or deletion.

Conversion Kits (Natural to Propane)

Model	Description	Wt.	List Price
Conversion Kits (Natural to Propane)			
Kits include orifice(s) and gas conversion sticker.			
B072622	LP Side Burner Conversion Kit (Orifice .89)		$10.00
B100239	Conversion Kit (orifices and manifold)Orifice #55 for P3/P4/D3/D4 (Not for P3-X)		$27.00
B100240	Conversion Kit (includes LP hose and regulator) for P3/P4/D3/D4 (Not for P4-X)		$49.00
B100241	Conversion Kit (orifice only) Orifice #56 for S5/P5/D5		$17.00
B100242	Conversion Kit - Twin Valve for P5/D5 (includes LP hose and regulator)		$67.00
B101111	LP (One Orifice only #55 - 2 required)T3 (all)		$5.00
BCK1005	Conversion Kits for R3B	4	$49.00
BCK1006	Conversion Kits for R3	4	$49.00
BCK1007	Conversion Kits for T3	4	$49.00
BCK1009	P3X	4	$60.00
BCK1011	P4X, H3X	4	$60.00

Conversion Kits (Propane to Natural)

Model	Description	Wt.	List Price
Conversion Kits (Propane to Natural)			
Kits include orifice(s) and gas conversion sticker.			
B073270	Conversion Kit Side Burner Natural (Orifice 1.73)		$10.00
B100243	Conversion Kit (manifolds & orifices) #48 for P3/D3/P4/D4		$27.00
B100244	Conversion Kit for P3/D3/P4/D4 Includes NG12 (Natural Gas Hose with Quick Connect)		$111.00
B100443	Conversion Kit for P5/D5/S5 Includes NG12 (Natural Gas Hose with Quick Connect)		$122.00
B100444	Conversion Kit (orifices only) Orifice #52 for P5/D5/S5		$13.00
B101062	Nat (One Orifices only #48 - 2 required)T3 (all)		$5.00
BCK1004	Conversion Kit for T3, R3	4	$10.00
BCK1008	P3X	4	$40.00
BCK1010	P4X, H3X	4	$40.00

Side Shelf Kits

Model	Description	Wt.	List Price
Side Shelf Kits			
Items below do not include hardware			
B076727	Side Shelf, Stainless Steel (No Hardware) for P3/P4/D3/D4/R3		$93.00
B100561	Side Shelf, Solid Surface (Black) (No Hardware) for P3/P4/D3/D4/R3		$23.00
	Replacement Shelf for SKFPBLACK, SKFBLACK and SKBLACK Only		
B101322	Side Shelf, Black (No Hardware) for P3/P4/D3/D4/R3	7	$25.00
B100002	Stainless Steel Side Shelf Hardware Bag		$7.00
B100006	Side Shelf Hardware Bag for P3/P4		$7.00
B100552	Hardware Kit for SKF Shelf		$7.00
B100553	Hardware Kit for SKFBLACK Shelf		$7.00
B100554	Hardware Kit for SKFP Shelf		$7.00

Front Shelf Components

Model	Description	List Price
Front Shelf Components		
Items below do not include hardware		
B073261	Front Shelf Charcoal (No Hardware) for P3/P4/D3/D4	$57.00
B076726	Stainless Steel Front Shelf	$98.00
B100872	Front Shelf Black (No Hardware) for P3/P4/D3/D4	$57.00
B100836	Front Shelf, Stainless Steel (No Hardware) for P Series	$84.00

Front Shelf Brackets

Model	Description	List Price
Front Shelf Bracket		
Includes one bracket and hardware		
2002 and Newer Grills		
B100034	Stainless Steel Left Front Bracket (2002 P3/P4)	$5.00
B100035	Stainless Steel Right Front Bracket (2002 P3/P4)	$5.00
B100018	Stainless Steel Front Shelf Screw Bag for P3/P4	$2.00
B100020	Front Shelf Screw Bag	$2.00

Non-current production items are limited and are subject to substitution or deletion.

Hardware

Model	Description	Wt.	List Price
Hardware			
B100853	Hardware Kit (Nat) for P3/P4		$45.00
B101218	Hardware Kit (LP) for T3-2		$40.00
B101219	Hardware Kit (Nat) for T3		$40.00
B101235	Hardware Kit (LP) for P3/P4		$50.00
B101309	Hardware Kit (LP) for R3		$30.00
B101310	Hardware Kit (Nat) for R3		$30.00

Kits include collector box kit, lid stop, foam grip and knob.

Heat Indicators

Model	Description		List Price
Heat Indicators			
B101118	Heat Indicator for T3/R3		$15.00
DPP18	Heat Indicator - Broilmaster Logo (All Models)	1	$17.00
DPP18C	Heat Indicator, Coil Spring Style, No Logo	1	$17.00
DPP108	Heat Indicator for P3X, H3X		$17.00

Heat Shields

Model	Description		List Price
Heat Shields			
DPP106	Stainless Steel Heat Shield/Wind Deflector for T3	1	$30.00
DPP7SS	Stainless Steel Heat Shield/Wind Deflector for P3/D3/P4/Q3 (all)	3	$26.00

Non-current production items are limited and are subject to substitution or deletion.

Ignitors

Model	Description	Wt.	List Price
Ignitors			
DPP105	Ignitor Kit for T3 (B101101)	3	$46.00
B101271	Infrared Ignitor (1 required for R3B, 2 required for R3)	3	$7.00
B072218	Electronic Ignitor Head Only for P3/P4/P5/D3/D4		$23.00
B100402	Collector Box Kit (Electronic Ignitor) for P3/P4/D3/D4		$27.00
B101212	Collector Box (2 Required) for T3		$21.00
DPP19	Replacement Rotary Piezo Ignitor	2	$34.00
DPP20	Electronic Ignitor Kit	2	$40.00
B056598	Rotary Ignitor and Knob only for D Series 1994-1999		$26.00
B100401	Collector Box Kit for D Series 1994-1999		$32.00
B100446	Collector Box Only (Electronic) for P3/P4		$23.00
B056482	Collector Box Only (Rotary) for D Series		$33.00
B056596	Push Button Ignitor Kit for S5		$35.00
B058126	Collector Box only for S5		$21.00
B100412	Collector Box Kit		$29.00
R854	Piezo Ignitor		$6.00

Non-current production items are limited and are subject to substitution or deletion.

Mounting Repair Parts

Model	Description	List Price
Carts		
B063105	8” Gray Plastic Wheel for PC Cart	$9.00
B100856	Hardware Bag for GC3 and GC4	$22.00
B100857	Hardware Bag (B072216) for PC Cart	$27.00
B100858	Hardware Bag (B072230) for DC Cart	$27.00
Patio Post (2011 & Newer)		
B101430	Black Post with Hardware	$95.00
B101432	Stainless Steel Post with Hardware	$115.00
B101454	Upper Bracket	$5.00
B101479	Lower Bracket	$6.00
B101571	Hardware Pack	$17.00
B101572	Hardware Pack	$15.00
In-Ground Post (2011 & Newer)		
B101447	Hardware Pack	$12.00
B101490	Post Access Panel, Black	$5.00
B101546	Post Access Panel, Stainless Steel	$5.00
B101573	Hardware Pack	$15.00
B101754	Post Extension Kit for 2012 and newer. Black and Stainless Steel	$20.00
Mounting Repair Parts - Patio Post (2010 and Prior)		
B070283	U26SS Square Post	$50.00
B074604	Cast Iron Base	$85.00
B074605	Black Post Complete with Hardware	$120.00
B074609	Stainless Steel Post Complete with Hardware	$164.00
B100521	Hardware Kit, U26 Hardware	$27.00
B100523	Hardware Kit, U26 Stainless Steel Hardware	$33.00
B878517	26-inch Square Replacement Post (Black)	$25.00
Mounting Repair Parts - In-Ground Post		
B064573	48-inch Square Replacement Stainless Steel Post only	$85.00
B100520	Hardware Kit, U48 In-Gorund Post	$22.00
B100522	Hardware Kit, P48 In-Ground Post	$25.00
B825615	48-inch Square Replacement Painted Post only	$40.00

Control Housing/Cover Plates

Model	Description	List Price
Control Housing/Cover Plates		
B101120	Painted Control Housing for DCB-1 Cart with Pre-2011 Grill	$12.00
B101668	Stainless Steel Control Housing for BL48G, SS48G, SS26P, BL26P Posts with Pre-2011 Grill	$00.00
B101122	Painted Control Housing for Painted Post for BPB26/48	$12.00
B101123	Stainless Steel Control Housing for Stainless Steel for SSPB26/48	$25.00
B101546	Stainless Steel Cover Plate for Posts - SS26P, SS48G, BL26P and BL48G (Required for R3 and T3. P3 Grill prior to 2011 will not fit.)	$5.00
B101121	Stainless Steel Control Housing for PC2, PCB1 and DCB1 Cart (Required for P3, R3, and T3 Grill Heads Pre-2011)	$25.00

Pull Handles

Model	Description	List Price
Pull Handles		
B073100	Pull Handle Stainless Steel (All Models)	$35.00

Includes one pull handle and hardware
Non-current production items are limited and are subject to substitution or deletion.

Rotisserie Parts

Model	Description	List Price
Rotisserie Parts		
DPA51		
B053585	Hugga-Kit, turns standard Rotisserie into Hugga-Rack®. Includes Hugga-Grids, frame and hardware	$152.00
B076850	Meat Holder (2 required)	$11.00
B076851	Spit Rod	$28.00
B076852	Counterbalance Assembly	$10.00
B076854	Handle & Thumb nut	$8.00
B100078	Motor Bracket (DPA23)(B662318)	$5.00
B885340	Locator Sleeve	$10.00
Hugga-Rack® (DPA11)		
B053825	Spit Rod (2 required)	$29.00
B066650	DPA11 Hugga-Rack® Rotisserie Hardware Bag	$55.00
B885232	Grid Basket (sides only - requires B885233)	$22.00
B885233	Grid Basket (ends only - requires B885232)	$22.00
B885322	Meat Rack (2 required)	$26.00
B906213	Center Frame	$52.00
B906222	Threaded Rod (4 required)	$5.00
B100106	DISCONTINUED - See B100932	
B100932	Replacement Motor with transformer	$82.00

Non-current production items are limited and are subject to substitution or deletion.

Valves

Model	Description	List Price
Valves		
B100514	Twin Natural Valve Assembly for P3/P4/D3/D4 (male flare fitting) with Stainless Steel Mounting Bracket	$70.00
B100515	Twin Propane Valve Assembly for P3/P4/D3/D4 (male flare fitting) with Stainless Steel Mounting Bracket	$91.00
B100517	Plate, Orifice Mounting	$2.00
B101040	Valve & Manifold LP for T3	$98.00
B101112	Valve & Manifold Natural for T3	$98.00
B076789.	Natural Twin Natural Valve for P3/P4/D3/D4	$37.00
B076790	LP Twin Propane Valve for P3/P4/D3/D4	$37.00
B069750	Natural Twin Natural Valve 45° for S5	$32.00
B069751	LP Twin Propane Valve 45° for P5/D5/S5/S2	$32.00
B070483	LP Side Burner Single Valve for DPSBSS	$36.00
B069002	LP Manifold with orifice for P3/P4/D3/D4	$14.00
B069003	Natural Manifold with orifice for P3/P4/D3/D4	$14.00

Valves & Knobs

Model	Description	List Price
Valves & Knobs		
B070084	Black Knob (New Style) for P3/P4/P5/D2/D3/D4/D5/DPSBNSS/DPSBPSS	$5.00
B662327	Universal Knob for G3/G4/G1000	$5.00
R3918	Knob-Main & Side Burners for SSG36-1/T3	$7.25

Warming Racks

Model	Description	List Price
Warming Racks		
B060757	DISCONTINUED -See B072696	
B072695	Stainless Steel (Retract-A-Rack, Fold Out) for P3/D3/T3/R3	$62.00
B072696	Stainless Steel (Rack Only) for P4/D4	$40.00
B072697	Chrome-Plated Warming Rack (Non-Folding) for P5/D5/S5(B878363)	$39.00
B100594	Chrome Warming Rack for D3/P3/T3	$33.00

Non-current production items are limited and are subject to substitution or deletion.

Miscellaneous Parts

Model	Description	Wt.	List Price
Grease Cups/Trays			
B060336	Grease Tray Bracket for S5/D5		$5.75
B060337	One Disposable Aluminum Grease Cup		$.50
B067800	Stainless Steel Sliding Grease Tray 1999 Model		$23.00
B067881	Painted Drip Tray 1999 Model		$17.00
B072206	Stainless Steel Drip Pan Drawer Complete Since 2001		$23.00
B072211	Drip Pan Drawer Complete Since 2001		$17.00
B072215	Grease Cup Bracket 2000 Model (Cart Models)		$5.50
B100526	Grease Catcher Can		$6.00
B100545	Grease Cup Bracket (Post Mount Only)		$10.00
Hoses/Regulators			
B059605	Hansen Quick-Connect Only		$30.00
B069756	Hose & Regulator with Q. C. C. (female pipe fitting)		$25.00
Paint			
DPA18BL	Grill Paint, Hi Temp. Black, 12 oz.	2	$16.00
DPA18GY	Grill Paint, Hi Temp. Gray, 12 oz.	2	$16.00
DPA18HG	Grill Paint, Hi Temp. Hunter Green, 12 oz.	2	$16.00
Channel Edge Protector			
B101635	Channel Edge Protector		$2.00
Cart Shield			
B101633	Cart Shield		$25.00

BROILMASTER®
PREMIUM GAS GRILLS

The Most Durable Grill
Known To Man

Broilmaster Premium Gas Grills is a
Registered Trademark of
Empire Comfort Systems Inc.
918 Freeburg Avenue
Belleville, IL 62222
www.broilmaster.com

GAS-FIRED
C UL US
LISTED

00743-020812