PFWO210 & PFWO215

Trip Lever Waste & Overflow Trim Kits

Product Features

- Brass Trip Plate With Handle
- Shoe strainer with grid and screw
- 1-5/8" -16 UN fine thread strainer
- Heavy duty metal construction

PFWO210

Model Numbers

PFWO210 - BN finish
PFWO215 - ORB finish

Product Specifications

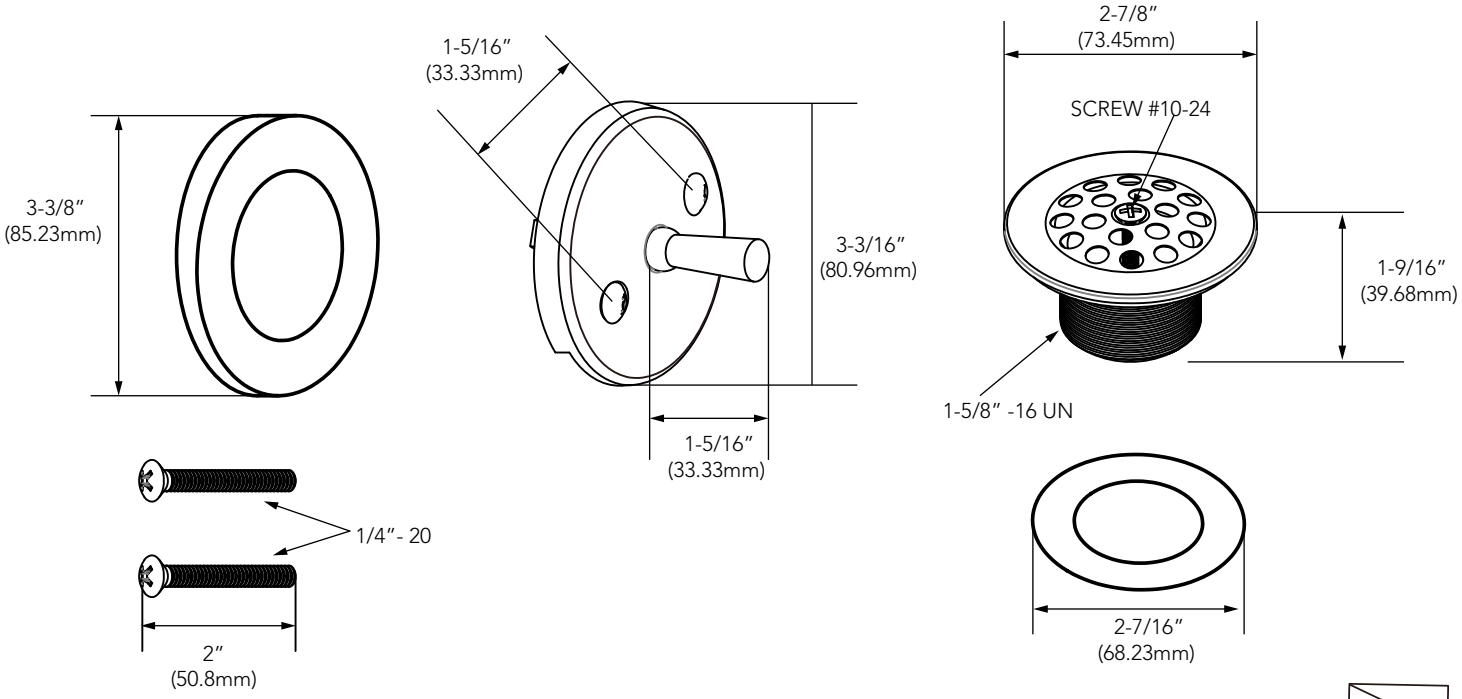

Warranty and Codes

This product comes complete with installation, operating, care and maintenance instructions.
This PROFLO product carries a 1-year limited warranty.

© 2019 Ferguson Enterprises, LLC. All Rights Reserved

Distributed Exclusively by Ferguson and Wolseley Canada

FG 09/19-B