SUBMITTAL INFORMATION

Gulfbox - *(G148-x33-NL style)*

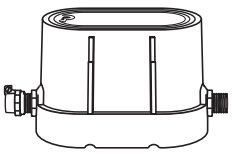

PACK JOINT FOR COPPER OR PLASTIC TUBING (CTS) INLET BY MALE IRON PIPE OUTLET

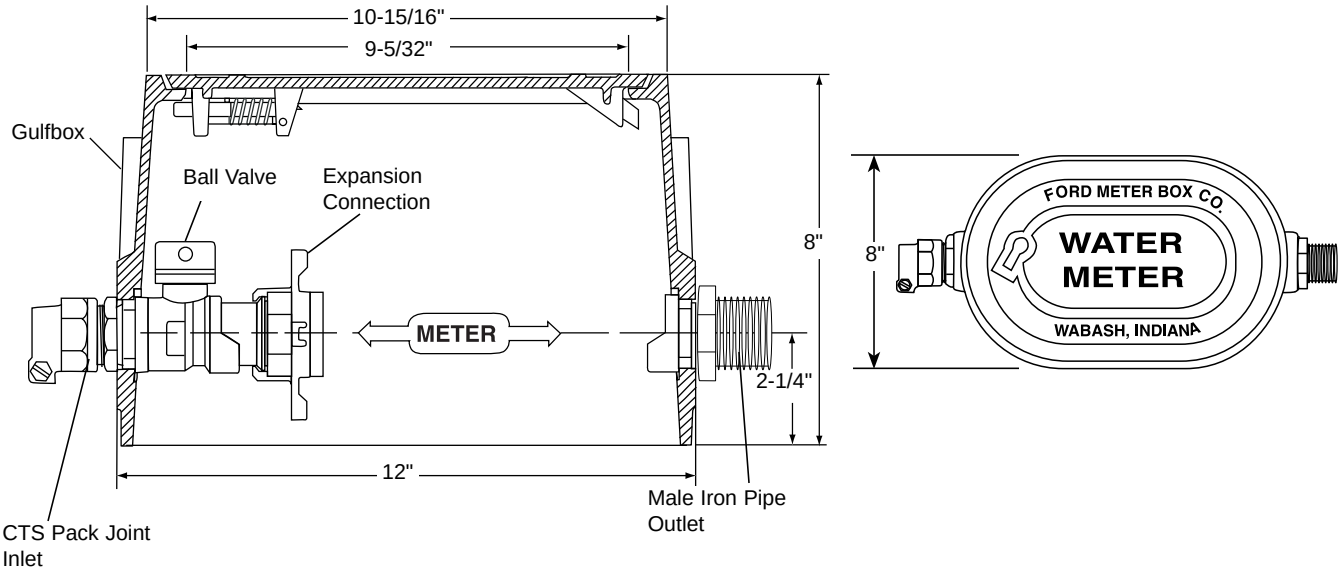

Meter Size	CTS PJ Inlet	MIP Outlet	Approx. Wt. Lbs.	Catalog Number	✓ Submitted Item(s)
5/8"	3/4"	3/4"	28.0	G148-133-NL	
5/8"x3/4"	3/4"	3/4"	28.0	G148-233-NL	

Note: Ford recommends using insert stiffeners with plastic pipe or tubing

FEATURES

- All brass that comes in contact with potable water conforms to AWWA Standard C800 (UNS NO C89833)
- The product has the letters "NL" cast into the main body for proper identification
- Brass components that do not come in contact with potable water conform to AWWA Standard C800 (ASTM B-62 and ASTM B-584, UNS NO C83600 - 85-5-5-5)
- Body and lid are cast iron per ASTM A48, Class 25
- The brass end fittings are permanently and properly spaced and aligned for the meter
- Locking lid is standard
- Lockless lid is available; add "-LL" to catalog number

The Ford Meter Box Company considers the information in this submittal form to be correct at the time of publication. Item and option availability, including specifications, are subject to change without notice. Please verify that your product information is current.

The Ford Meter Box Company, Inc.
P.O. Box 443, Wabash, Indiana U.S.A. 46992-0443
Phone: 260-563-3171 / Fax: 800-826-3487
Overseas Fax: 260-563-0167
http://www.fordmeterbox.com

02/15/13

Submitted By: