CLEVELAND CFG FAUCET GROUP™
A Moen Incorporated Brand

CORNERSTONE®
One-Handle Kitchen Faucet with Side Spray

MODEL	HANDLE/SIDE SPRAY	FINISH
CA40511	Lever / None	Chrome
CA40511SL	Lever / None	Stainless
CA40513	Lever / White	Chrome
CA40513B	Lever / Black	Chrome
CA40513SL	Lever / Stainless	Stainless

PART NUMBERS

Números de partes / Numéro de pièces

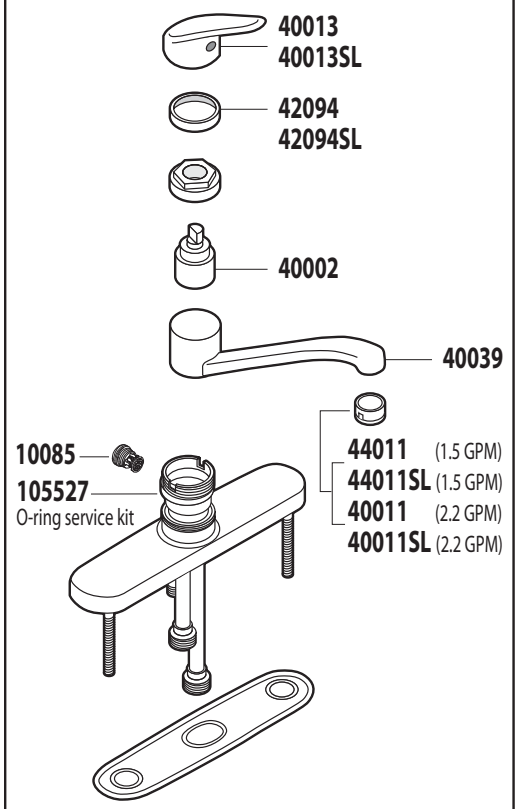

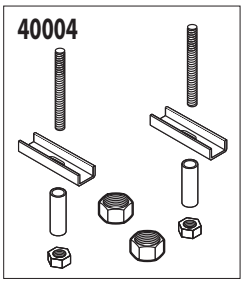

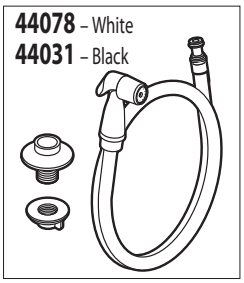

For Models prior to 9/1/2011

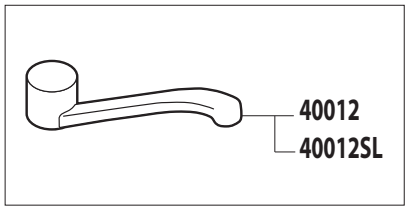

For Models prior to 7/1/2010