PFLTBLK

Faucet Block for Utility Sinks

Product Features

- Mounts to laundry tubs or utility sinks for use with clamp-on faucets and overhead supply lines.
- Constructed from durable impact resistant plastic
- Comes with 2 sets of screws and 2 washers for easy installation

Model Numbers

PFLTBLK DLX Molded FCT Block with screws

1. Screws
2. Washers
3. Faucet block

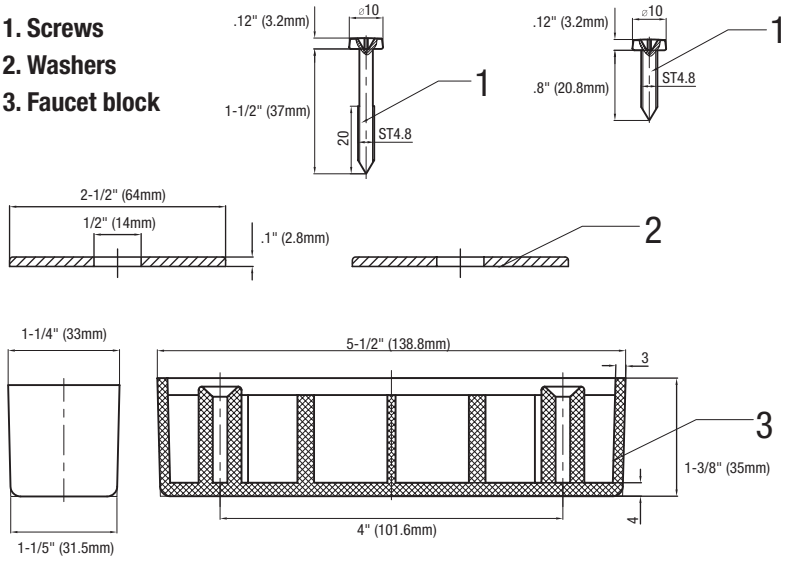

Installation Instructions

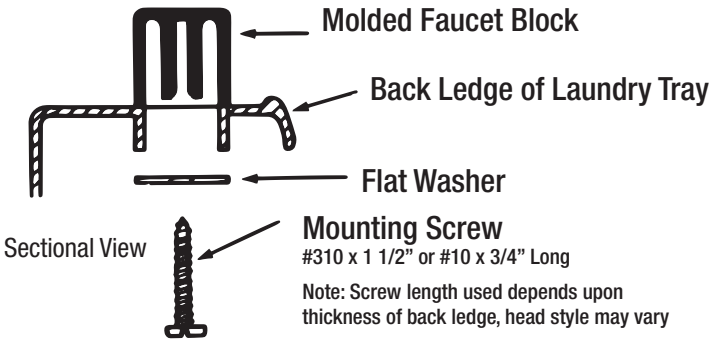

Warranty and Codes

PROFLO faucet blocks carry a 1-year limited warranty. In an effort to continually improve our products, FEI will make design changes from time to time. We reserve the right to ship newly designed product to fill any order unless we agree in writing to do otherwise.

Distributed Exclusively by Ferguson and Wolseley Canada

© 2013 Ferguson Enterprises, Inc.

17393 09/13