SPECIFICATIONS

PARMA™ TWO HANDLE LAVATORY FAUCET

Model
D301059

Description
- Ceramic disc valves
- With swivel spout
- Metal touch down drain assembly
- Single hole mount

Standards
- NSF 61-9
- Energy Policy Act of 1992

- ASME A112.18.1M/A112.18.1
- NSF/ANSI 372

Warranty
Danze products are covered by a manufacturer's limited "lifetime" warranty for manufacturing defects.

Flow Rate

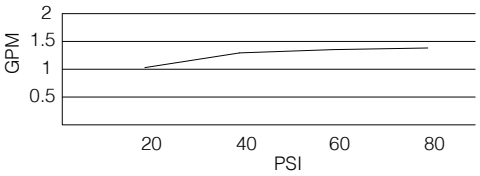

Certified by IAPMO R&T

Finishes Available
- Chrome
- Brushed Nikel

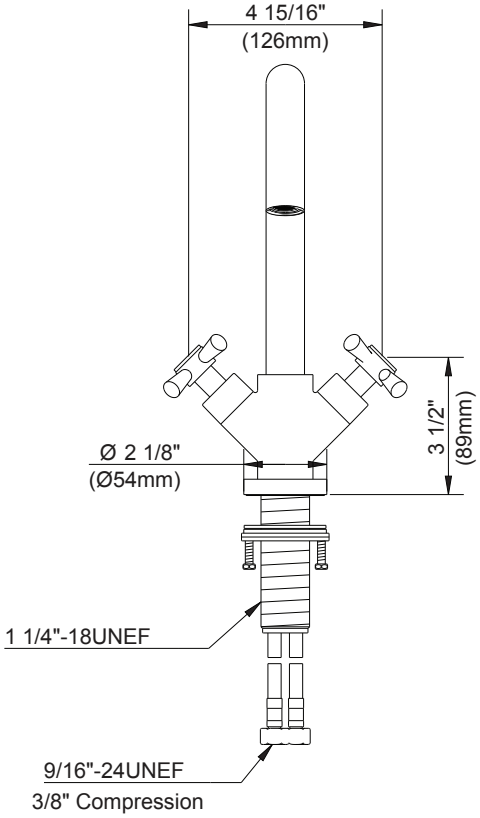

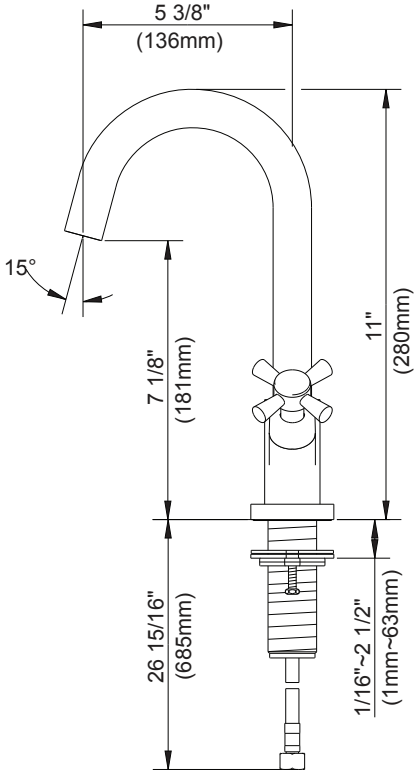

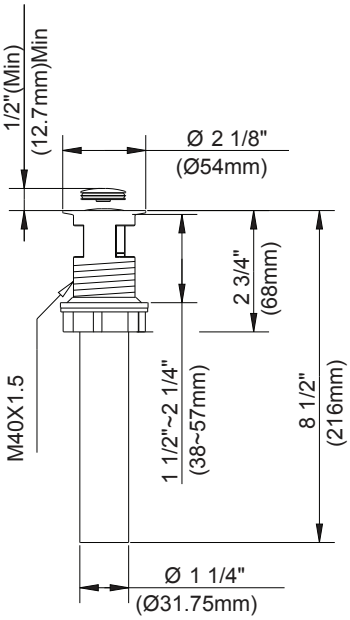

Submittal Information:

Job Name: _____ *Location:* _____

Contractor: _____ *Contact #:* _____