INSTALLATION, OPERATION, AND MAINTENANCE MANUAL FOR ELECTRIC TANKLESS WATER HEATERS

SPECADVANTAGE | SAFE ADVANTAGE



⚠ IMPORTANT SAFETY INFORMATION

READ ALL INSTRUCTIONS BEFORE USING

⚠ DANGER

Indicates an imminently hazardous situation which, if not avoided, will result in death or serious injury.

⚠ WARNING

Indicates a potentially hazardous situation which, if not avoided, could result in death or serious injury.

⚠ CAUTION

Indicates a potentially hazardous situation which, if not avoided, may result in minor or moderate injury.

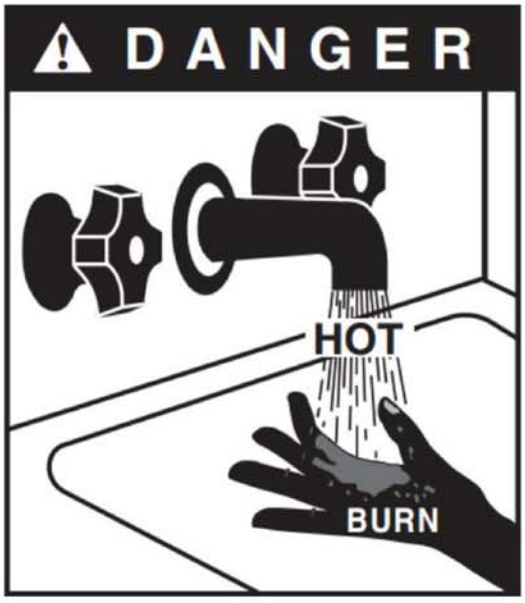

Hot water can be dangerous. There is a high scald potential if the thermostat is set too high.

Water temperatures over 125 °F (51 °C) can cause severe burns or scalding resulting in death.

Hot water can cause first degree burns with exposure for as little as:
3 seconds at 140 °F (60 °C)
20 seconds at 130 °F (54 °C)
8 minutes at 120 °F (48 °C)

⚠ IMPORTANT SAFETY INFORMATION

READ ALL INSTRUCTIONS BEFORE USING

1. You must read and follow all instructions. Serious bodily injury or death could occur if you ignore this warning.

2. All circuit breakers and/or disconnect switches servicing the heater must be turned off when installing, uninstalling, or repairing this water heater.

3. The unit must be installed by a licensed electrician and plumber.

4. The unit must be wired in accordance with the current version of the National Electrical Code (US) or Canadian Electric Code (Canada).

5. This installation must comply with all national, state, and local plumbing and electrical codes.

6. When the heater is not within sight of the electrical circuit breakers, an additional local means of disconnection of all ungrounded conductors must be provided that is within sight of the appliance or a circuit breaker lockout must be used. (Ref. NEC 422.31)

7. Per UL 499, this water heater is not required to be installed with a Temperature and Pressure relief valve (T&P). However, local codes may vary. In case a T&P relief valve is required, it must be installed on the outlet hot water line heater between the heater and the isolation valve.

8. If the Eemax Tank less Water Heater is installed in a location where water damage could occur in the event of a leak, it is recommended that a drip pan be installed and connected to a suitable drain. Alternatively, an active water leak detector and shut off valve can be installed to turn off your water supply in the event a leak is detected.

9. If water supply has a high mineral content, a water softening system is recommended. Damage to the water heater resulting from scale or hard minerals will not be covered under warranty.

⚠ IMPORTANT SAFETY INFORMATION

READ ALL INSTRUCTIONS BEFORE USING

10. When the heater is installed in a well water system or if the plumbing system is prone to introducing air into the heater, it is highly recommended that an air separator be installed in the cold water feed to the heater to avoid possible failure of the heating element and/or heating chamber.

11. In accordance with NEC guideline, this water heater is designed for a continuous duty cycle of 3 hours at 100% power output. Exceeding this rating could damage the heater and void the warranty

12. Provide your heater with potable, uninterrupted supply of water at a constant minimum pressure of 35PSI (based on model) and maximum pressure of 150 PSI.

13. Use of Water Hammer Arrestors in applications with excess pipe lengths or fast acting valves strongly recommended, neglecting to do so will damage the heater and void the warranty

14. This heater must be in a location where it is not subject to freezing temperatures unless supplied with factory installed freeze protection

15. Properly purge air out of system before power is applied. Recommended to purge water through system for minimum 2 minutes at a minimum 15 gpm, closing and opening drain valve 3 times to move any lodged air before power is applied.

16. Sanitation models used in a circulator system, a 30 second factory set delay program will be installed to establish flow before power is applied. Contact Eemax for information 1-800-543-6163

17. Applications with the use of a recirculation circulator must be installed according schematics.

18. **The use of Ethylene glycol antifreeze is strictly prohibited. Propylene Glycol is the only recommended antifreeze**

TABLE OF CONTENTS

PERFORMANCE FEATURES....1
OPERATION PRINCIPLE....3
MOUNTING THE HEATER TO THE WALL....4
ELECTRICAL HOOKUP....5
PLUMBING HOOKUP....7
COMMISSIONING THE WATER HEATER....10
MONITORING & PREVENTIVE MAINTENANCE....14
CONTROL FEATURES....15
TROUBLESHOOTING PROCEDURES....18
TECHNICAL SUPPORT....20
APPLICATIONS SCHEMATICS....24
WIRING SCHEMATICS....61

PERFORMANCE FEATURES

Heating Technology

- Field Replaceable, non-ferrous, lead-free cartridge-style direct heating element

Safety and Reliability

- Thermo-Optical sensor for protection against entrained air or improper commissioning

Materials and Construction

- NSF-61 listed materials of construction

Control and Consumption

- Active energy management to ensure optimal application of energy based on real-time system demands
- Multistage element turn-on
- Visual user interface for field programming

Turn-on Flow Rate

- Integrated high-capacity flow meter
- Field adjustable maximum activation flow rate (minimum activation flow rate factory set and is not field adjustable.)

Pressure Rating

- Operating pressure range not to exceed 60 – 90 PSI. Maximum pressure rating 150 psi

Available Enclosures

- N4 – NEMA 4 (Standard)
- N4X – NEMA 4X 304SS
- N4X6 – NEMA 4X 316SS

Class l Div II enclosures

Optional Features

- Indoor disconnect switch (fused or non-fused)
- Stand Kits (for freestanding applications)
- Beacon
- Siren
- Alarm contacts
- GFCI
- FREEZE PROTECTION
- Additional Options available per customer request

1A) Purpose and function of Equipment and auxiliary equipment and systems



- WATER ENTERS THE HEATER AND ACTIVATES THE ENERGY TRANSFER AS IT PASSES THROUGH THE FLOW METER.
- THE WATER ENTERS THE INLET MANIFOLD INTO ONE OF THE 6 PARALLEL HEATING CHAMBERS.
- IN THE HEATING CHAMBER, WATER FLOWS IN A HELICAL FASHION UP THE OUTSIDE OF THE HEATING ROD, HEATING UP AS IT IS EXPOSED TO THE DIRECT HEATING ELEMENT.
- THE WATER MAKES A PARABOLIC TRANSITION AT THE TOP OF THE HEATING CHAMBER AND SHOOTS DOWN THE CENTER OF THE HEATING ROD INTO THE OUTLET MANIFOLD.
- IN THE OUTLET MANIFOLD THE WATER FROM THE 6 PARALLEL HEATING CHAMBERS MIXES AND EXITS THROUGH THE BOTTOM MANIFOLD.
- THE CONTROL BOARD UTILIZES THE DATA FROM INLET AND OUTLET TEMPERATURE SENSORS, AS WELL AS THE FLOW METER, AND ACTIVELY MANAGES THE ENERGY CONSUMPTION NECESSARY TO ACHIEVE DESIRED SET POINT TEMPERATURE AT THE EXIT POINT.

OPERATION PRINCIPLE

How the Eemax Tankless Water Heater Works

Operating the new Eemax tankless water heater is similar to using any traditional water heater system. However, it is very important that all of the set-up procedures and operating instructions are carefully read to ensure maximum performance and energy savings from the water heater.

The Eemax tankless water heater does not store hot water like a conventional tank-type water heater. It contains high powered bare wire technology heating elements that are capable of heating water instantly on-demand. Whenever there is a hot water demand, the patented flow meter within the heater recognizes the demand and initiates the heating process. This meter measures the water flow rate while two thermistor sensors measure the incoming and outgoing water temperature. This information is transmitted continually to the microprocessor controller which determines the precise amount of power to send to the heating elements to heat the water to the desired temperature. The Eemax tankless water heater only uses as much power as is needed to meet the demand by fully modulating the heating elements from 0 to 100%.

It is important to keep in mind that all tankless water heaters are subject to a maximum flow rate. If this flow rate is exceeded, the heater will not be capable of fully heating water. The amount of water that can be heated by the tankless water heater at any given time will depend on the model selected and the incoming water temperature. See diagram on below to determine the maximum flow rates. Since a tankless water heater eliminates the ongoing thermal losses caused by storing hot water in a tank, there will be a significant energy savings compared to a conventional tank type water heater.

Temperature Rise at Specified Flow Rate (°F)

MODEL	TURN-ON GPM	3.0 GPM	4.0 GPM	6.0 GPM	8.0 GPM	12.0 GPM	20.0 GPM	25.0 GPM	30.0 GPM
AP032208	1.0	73	55	36	27	18	10	8	7
AP036208	1.0	82	61	41	29	20	12	9	8
AP041208	1.0	93	70	47	35	23	13	11	9
AP054208	1.5	123	92	61	46	31	18	14	12
AP064208	2.5	146	109	73	55	36	22	17	15
AP036480	1.0	82	61	41	31	20	12	9	8
AP039480	1.0	89	67	44	33	22	13	11	7
AP048480	1.0	109	82	55	41	27	16	13	11
AP054480	1.5	123	92	61	46	31	18	14	12
AP063480	2.5	143	108	72	53	36	22	17	14
AP072480	2.5	147	123	82	61	41	25	20	16
AP096480	2.5	-	-	109	82	54	33	26	22
AP108480	2.5	-	-	99	92	61	37	30	25
AP126480	2.5	-	-	143	107	72	43	34	29
AP144480	2.5	-	-	-	122	82	49	40	34
AP130600	2.5	-	-	-	111	73	44	35	30
AP150600	2.5	-	-	-	128	85	52	40	35

MOUNTING THE HEATER TO THE WALL

Please follow the mounting instructions as appropriate to your installation. Eemax recommends the heater be installed close to the point of use.

⚠ CAUTION

This heater must be installed in a location where it is not subject to freezing temperatures, unless supplied with factory installed freeze protection

Make sure the brass fittings are at the bottom of the heater. No other heater orientation is permitted.

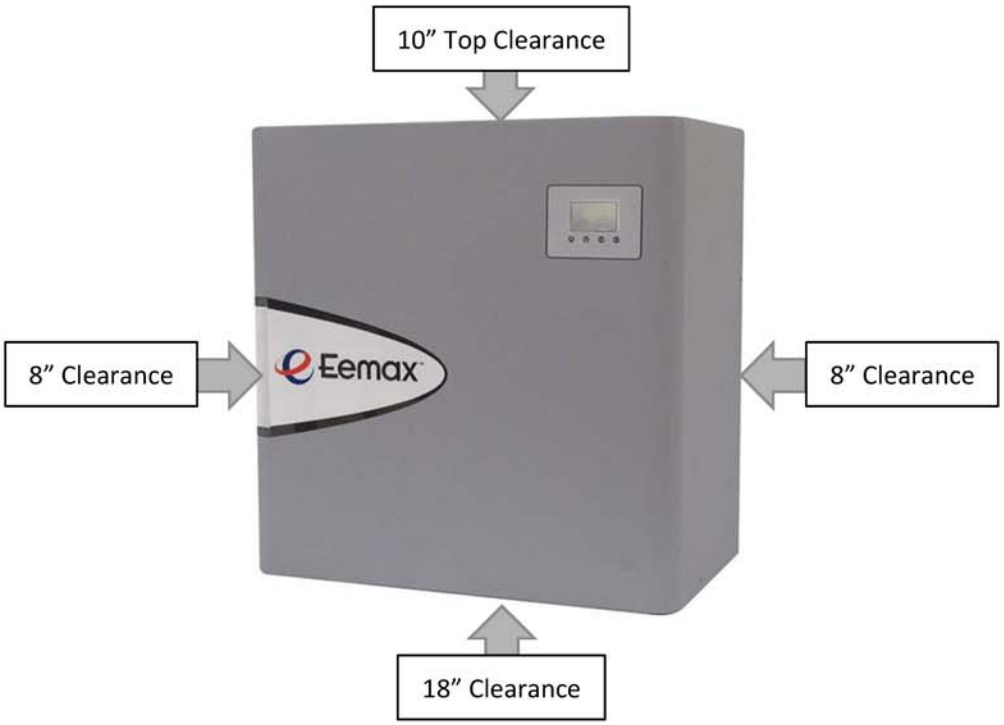

The AP series is approved for zero clearance to combustibles.

Above clearances recommended for service and installation.

ELECTRICAL HOOKUP

Eemax recommends your heater be installed or serviced by a licensed plumber and electrician.

⚠ WARNING

Before beginning any work on this installation, BE SURE THAT THE ELECTRICAL BREAKER IS "OFF" AND THAT ALL MOUNTING AND PLUMBING WORK HAS BEEN COMPLETED PER THESE INSTRUCTIONS.

This heater must have its own independent circuit using insulated, UL listed wire conductors of the appropriate size suitable for up to 90° C and protected by the correctly rated circuit breaker.

See chart on next page.



Before starting any electrical work VERIFY there is no power at the heater before proceeding

The power conductors are to be secured to the L1, L2 and L3 connectors on the terminal block (**Fig. 1**) or contactor (**Fig. 2**). The ground is to be secured to the GND connector to the right of the terminal block.

Fig. 1



Fig. 2

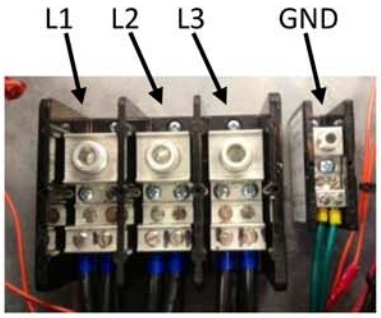

⚠ WARNING

FAILURE TO GROUND THE SYSTEM MAY RESULT IN SERIOUS INJURY, DEATH AND/OR PROPERTY DAMAGE.

Electrical Specifications

MODEL	VOLTS 3-PHASE DELTA	KW	AMPS PER PHASE	RECOMMENDED WIRE SIZE (CU) 90° C
AP032208	208	32	89	1 AWG
AP036208	208	36	100	1 AWG
AP041208	208	41	114	1 AWG
AP054208	208	54	150	2/0
AP064208	208	64	178	3/0
AP036480	480	36	44	8 AWG
AP039480	480	39	47	8 AWG
AP048480	480	48	58	6 AWG
AP054480	480	54	65	4 AWG
AP063480	480	63	76	3 AWG
AP072480	480	72	86	3 AWG
AP096480	480	96	116	1 AWG
AP108480	480	108	130	1/0
AP126480	480	126	152	2/0
AP144480	480	144	173	3/0
AP048600	600	48	47	8 AWG
AP051600	600	51	50	6 AWG
AP061600	600	61	59	6 AWG
AP071600	600	71	69	4 AWG
AP102600	600	102	99	1 AWG
AP130600	600	130	130	1 AWG
AP150600	600	150	145	1/0

A green terminal (or a wire connector marked “G”, “GR, “Ground”, or “GROUNDING”) is provided within the control box. To reduce the risk of electric shock, connect this terminal or connector to the grounding terminal of the electric service or supply panel with a continuous copper wire in accordance with your local electrical code.

PLUMBING HOOKUP

⚠ MUST FLUSH LINE A MINIMUM 5 MINUTES, AT A MINIMUM 15 GPM ON INITIAL START UP

The heater is equipped with NPT brass fittings.

Make sure ONLY NPT fittings are used for connection to this heater.

Connect the cold water line with the inlet connection (RIGHT fitting)

Connect the outlet pipe with the outlet fitting (LEFT fitting)

Do not reverse connections.





⚠ CAUTION

Never use pipe dope when making plumbing connections to this heater. Follow standard industry practice with careful application of Teflon tape. Do not allow Teflon tape to get into the heater.

⚠ CAUTION

Never solder any pipe connections while attached to this heater – damage to the heater will result. Doing this will void the warranty.

PRV VENT LOCATION. The PRV Vent is not a code compliant pressure relief valve. Check local codes to see if a code compliant T&P Relief Valve is required in your installation.



WARNING

⚠ **MUST FLUSH OUT WATER HEATER FOR MINIMUM 5 MINUTES AT A MINIMUM 15 GPM ON INITIAL START UP OR AFTER ANY SERVICE WORK HAS BEEN PERFORMED. CLOSE AND OPEN DRAIN VALVE 3 TIMES TO REMOVE ANY LODGED AIR BUBBLES. FAILURE TO DO SO MAY DAMAGE THE HEATER.**

⚠ MINIMUM INLET WATER PRESSURE 35 PSI DYNAMIC.

⚠ MAXIMUM WATER PRESSURE NOT TO EXCEED 150 PSI. RECOMMENDED OPERATING PRESSURE 60 – 90 PSI.

⚠ USE OF A PRESSURE REGULATOR RECOMMENDED.

⚠ Water supply inlet piping must be a minimum 1 ¼" pipe diameter and it must be a dedicated supply line. 2 ½" minimum pipe diameter on trunk main when part of a branch system.

⚠ THE USE OF DI-ELECTRIC UNIONS MUST BE USED ON THE INLET AND OUTLET PORTS OF THE WATER HEATER. RECOMMENDED 40 MESH Y STRAINER BE INSTALLED IN COLD WATER INLET TO PREVENT DEBRIS FROM ENTERING THE WATER CHAMBERS. BLOCKAGE CAUSED BY DEBRIS MAY CAUSE ELEMENT FAILURE. ISOLATION VALVES RECOMMENDED FOR SERVICING

⚠ In applications where a long duty cycle is needed (more than 3 hours continuous run time), or a short duty cycle (less than 30 sec. on time with less than minute off time) please contact applications department. 1-800-543-6163

⚠ HAMMER ARRESTOR: SYSTEMS WITH A LARGE WATER VOLUME, OR LONG LENGTHS OF PIPING CAN BE SUSCEPTIBLE TO *WATER HAMMER*. THE USE OF SLOW ACTING VALVES ALONG WITH THE INSTALLATION OF A WATER HAMMER ARRESTOR IS HIGHLY RECOMMENDED ON ALL UNITS. FAILURE TO INSTALL A WATER HAMMER ARRESTOR CAN CAUSE DAMAGE TO WATER HEATER AND VOID WARRANTY- Refer to manufacturer's installation manual for proper size and installation location.

Water Hammer Arrester Sizing Chart

Pipe length (header to outlet)	Arrester Size	System Criteria
0-15'	B	-Max flow rate 30 GPM
15-30'	C	-Pipe ID greater than or equal to 1-1/4 in.
30-50'	D	-Includes ball valve, spray nozzle, shower valve
50-75'	E	-Inlet pressure 35-90 PSI
75-90'	F	
90'+	*contact arrester manufacturer*	

Proper water conditions must be maintained to prevent damage to the water heater.

CONSTITUENT (MG/L)	MINIMUM REQUIREMENT	BETTER	BEST
Alkalinity	50	25	10
Calcium	25	5	0.5
Carbon Dioxide	0	0	0
Chlorine	100	15	1
Free Chlorine	1	1	0.05
Iron	0.2	0.1	0.01
Magnesium as Mg	0.5	0.1	0.1
Magnesium as Mn	0.1	0.1	0.1
Nitrate	25	25	10
Oxygen	2	1	0.1
Silica	15	10	1
Sodium	50	10	1
Sulfate	25	25	1
TDS*	200	100	5**
Total Hardness	25	10	1
pH	6.5 – 8.5	6.5 – 8.5	6.5 – 8.5
Turbidity (NTU)	5	5	1

* NOTE: Total dissolved solids

** NOTE: Do not reduce the TDS beyond this amount or the water will be too aggressive

COMMISSIONING THE WATER HEATER

⚠ CAUTION

BEFORE SWITCHING THE ELECTRICAL BREAKER "ON", MAKE SURE THE INLET AND OUTLET BALL VALVES ARE FULLY OPEN AND WATER IS FLOWING THROUGH ALL POINTS OF USE FOR A **MINIMUM OF 5 MINUTES AT A MINIMUM 15 GPM. Open and close drain valve 3 times while purging to remove any lodged air bubbles**. DO NOT SWITCH THE BREAKER "ON" IF THERE IS ANY POSSIBILITY THE WATER IN THE HEATER IS FROZEN.

After verifying the heater has been purged of air (see above) turn the circuit breaker/disconnect "ON" and observe the start-up sequence on the display. The LCD screen will display the SETPOINT TEMPERATURE in degrees F.



Below the display are 4 push buttons that are used to control the function of the heater. Press the UP or DOWN buttons to establish your desired temperature. Refer to the CONTROL FEATURES section of this manual for additional information.

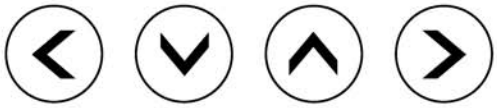

Startup Process

Plumbing Installation Checklist MUST BE FILLED OUT AND LEFT WITH WATER HEATER. **MUST FLUSH WATER HEATER FOR MINIMUM 5 MINUTES AT A MINIMUM.**

Eemax Installation Checklist and Startup Procedure for SafeAdvantage and SpecAdvantage Water Heaters

Important - Read and fully understand all steps outlined below before proceeding. Failure to do so may damage the water heater and void any warranty. Technical support is available at 1 (800) 543-6163				
Plumbing Installation Checklist				
Step	**Category**	**Action**	**Confirmed By**	**Notes**
1	**Water**	Heater is supplied with clean potable water		
2	**Water**	Plumbing orientation is correct – water connections on the bottom - inlet on the right, outlet on the left		
3	**Water**	Ensure piping connections are not causing stress or torque on the inlet and outlet fittings		
4	**Water**	No leaks at water connection or in plumbing network		
5	**Water**	Water pressure is between 40-90 PSI (min 35psi)		
6	**Water**	Long pipe runs, high flow rates and valves closing can cause pressure spikes (water hammer) above 1000 PSI. Consult piping schematic to ensure arrestors and regulators are properly sized and located.		
7	**Water**	*(with power off)* Open supply valves to water heater - run water through fixtures to purge all air and debris in system. With water flowing, visually inspect the clear element tubes between the inlet and outlet manifold to ensure no air bubbles are present. (this may take several minutes)		
8	**Water**	Using a flashlight, visually inspect heating chamber for any signs of leakage		
9	**Water**	Ensure Water Heater will not freeze		
10	**Water**	Ensure all local plumbing codes are met		
11	**Water**	Plumbing installation correct and complete		

Important - Read and fully understand all steps outlined below before proceeding. Failure to do so may damage the water heater and void any warranty. Technical support is available at 1 (800) 543-6163				
Electrical Installation Checklist				
Step	**Category**	**Action**	**Confirmed By**	**Notes**
12	**Power**	*(with power off)* - Breaker and disconnect are of proper size and correctly installed		
13	**Power**	*(with power off)* - Wiring and conduit are of proper size and correctly installed.		
14	**Power**	*(with power off)* - Wiring connections at terminals are correct orientation, tight, with no stray wire strands or pinched sheathing		
15	**Power**	*(with power off)* - Proper ground,(not neutral) is clean, and tight		
16	**Power**	(no water flowing, do not turn it on, close outlet water shut off valve if uncontrolled environment-left hand side) Apply power - ensure voltage and phasing is according to model rating		
17	**Power**	Disengage power after voltage and phasing is confirmed (open outlet shutoff valve if closed during step 14)		
18	**Power**	Ensure all local electrical codes are met		
19	**Power**	Electrical Installation correct and complete		

Important - Read and fully understand all steps outlined below before proceeding. Failure to do so may damage the water heater and void any warranty. Technical support is available at 1 (800) 543-6163				
Startup Procedure and Checklist				
Step	**Category**	**Action**	**Confirmed By**	**Notes**
20	**Startup**	Water requirements (Steps 1-11) are confirmed		
21	**Startup**	Electrical requirements (Steps 12-19) are confirmed		
22	**Startup**	Plumbing Codes and Electrical Codes are met and confirmed		
23	**Startup**	*(with power off)* Open supply valves to water heater - run water through fixtures to purge all air and debris in system. With water flowing, visually inspect the clear element tubes between the inlet and outlet manifold to ensure no air bubbles are present. (this may take several minutes) Chugging or burping of water is also an indication of air		
24	**Startup**	Turn off water flow at all fixtures, keeping water heater supply valves open		
25	**Startup**	Apply power to water heater		
26	**Startup**	Turn water flow on at fixtures		
27	**Startup**	LCD display board is illuminated		
28	**Startup**	Contactors engaged (audible click)		
29	**Startup**	No error codes		
30	**Startup**	Scroll through display (If display is locked, consult manual for unlock procedure)		
31	**Startup**	Adjust settings if needed. Note - Keep temperature setting as low as possible for scald potential and minimizing abuse on the heater.		
32	**Startup**	Confirm TURN-ON setting meets fixture flow rate		
33	**Startup**	Confirm SETPOINT setting on display		
34	**Startup**	Confirm ACTUAL TEMP output on display		
35	**Startup**	If SETPOINT does not match ACTUAL TEMP then use the TEMPERATURE RISE CHART in manual along with LOAD%, INLET TEMP and FLOW RATE on display to determine the maximum theoretical output.		
36	**Startup**	Shut water flow off at fixture		
37	**Startup**	Power disengaged (audible)		
38	**Startup**	Repeat startup steps 25-28 to ensure proper activation and performance		
39	**Startup**	Water heater installed correctly and operating as designed		

After all steps are completed, the heater is fully installed and ready for use.

Shutdown Process (Normal, Emergency, and Long Term)

Shut Down Procedure

Important - Read and fully understand all steps outlined below before proceeding. Failure to do so may damage the water heater and void any warranty. Technical support is available at 1 (800) 543-6163				
Step	**Category**	**Action**	**Confirmed By**	**Notes**
		Normal Shut Down Procedure		
1	**Normal**	Shut power off to unit in order of sequence - In-door (on-door) disconnect (if applicable) local disconnect, main breaker - perform lock out procedure per facilities requirements		
2	**Normal**	Close applicable water valves - Inlet and outlet (water heater will not be drained)		
		Emergency Shut Down Procedure		
1	**Emergency**	Shut power off to unit In-door (on door) disconnect (if applicable) or local disconnect		
2	**Emergency**	Shut water valves off - inlet and outlet (water heater will not be drained)		
3	**Emergency**	Complete lock out procedures per facilities requirements		
4	**Emergency**	Notify all parties involved that water heaters are shut down		
		Long Term Shut Down Procedure		
1	**Long Term**	Shut power off to unit in order of sequence - Indoor disconnect (if applicable) local disconnect, main breaker - perform lock out procedure per facilities requirements		
2	**Long Term**	Close applicable water valves - Inlet and outlet (water heater will not be drained)		
3	**Long Term**	Drain water heater through plumbing network, run compressed air through the water heater to ensure the heater is completely drained		
4	**Long Term**	Lock out all applicable water valves per facilities procedures		

MONITORING & PREVENTIVE MAINTENANCE

Recommended routine instrument readings and operation checking: Please note the instrument readings are performed during water heater operation. No readings are required when the unit is not being used. Check the following readings on the Remote display and ensure proper performance:

- Inlet temperature
- Temperature set point
- Actual outlet temperature
- Actual GPM
- Error codes

Early warning signs of developing operational or equipment problems:

- Based on the readings of 3A above water heater unit appears to be performing properly however there are error codes.
- Actual GPM appears to be lower than desired

Procedures for handling non-routine problems such as alarms, power failure, and component failure:

- No alarms are built into the unit
- Power failure will result in a non-operable system – restore power and startup unit per Start up process (2C)
- Component failure will result in repeat error codes. Refer to manual page 16 for error codes and corrective action

Preventative maintenance requirements: (PMR) Preventive maintenance requirements may impact other items of the installation such as electrical supply and wiring, water piping and associated valves and controls.

Eemax water heaters are very low maintenance.

Ensure that the water heater is supplied with a clean potable, consistent water supply as outlined in the O+M.

Check filter screen or associated y-strainer or other pre-filters to ensure clear water supply within listed water pressure. Ensure proper electrical supply as outlined within the O+M.

Perform PMR per site requirements not to exceed 90 days.

Maintenance inspection program: (MIP) Eemax water heaters are very low maintenance. Ensure PMR is completed every 90 days.

Disable power to the unit via external disconnect or local disconnects. Per site lockout procedures open cabinet door and visually inspect components for sings of damage associated with possible water leaks, excessive heat or external factors that could impact the water heater and associated components.

Perform MIP per site requirements not to exceed 90 days.

CONTROL FEATURES

⚠ CAUTION

BEFORE USING THIS CONTROL, make sure all prior installation steps have been properly completed, electrical power is on and water is present in the heater.

Push Button Flow Chart

1) The SETPOINT TEMP or ACTUAL TEMP screen can be selected for display as the home screen. Either of these screens will remain on the display when the backlight timer expires.	
2) There is a 5-minute time delay built into the control. Regardless of which screen is being displayed, after 5 minutes of inactivity, the display will revert to the SETPOINT TEMP screen.	
3) The 4 push buttons are used to control the operation of the heater. The LEFT and RIGHT buttons shift the display from one screen to another. The DOWN and UP buttons may change the values within selected screens.	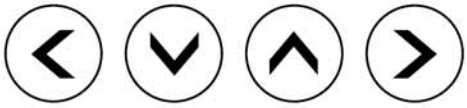
4) As an example, when the screen displays SETPOINT TEMP, the desired hot water temperature will increase 1 degree for each press of the UP button and decrease 1 degree for each press of the DOWN button. Note that minimum and maximum set point temperatures are established at the factory.	
5) The LEFT and RIGHT buttons shift the display from one screen to another. From the INLET TEMP screen, one press of the RIGHT button will shift the display to the SETPOINT TEMP screen. INLET TEMP shows the actual temperature of the water entering the heater.	
6) From the SETPOINT TEMP screen, one press of the RIGHT button will shift the display to the ACTUAL TEMP screen. This shows the actual temperature of the water leaving the heater.	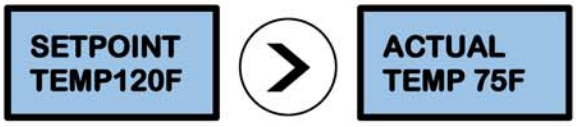
7) Form the ACTUAL TEMP screen, one press of the RIGHT button will shift the display to the LOAD PCT screen. This shows the electrical power consumption as a percentage of full power.	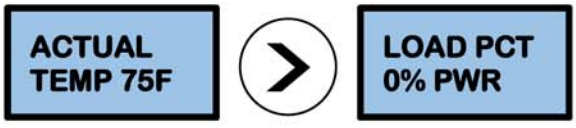

8) From the LOAD PCT screen, one press of the RIGHT button will shift the display to the FLOWRATE screen. This shows the rate of flow of water through the heater.	
9) From the FLOWRATE screen, one press of the RIGHT button will shift the display to the UNITS screen. This shows the units of measure in either the ENGLISH or METRIC systems. ENGLISH units are degrees Fahrenheit and gallons per minute. METRIC units are degrees Celsius and liters per second. Use the UP and DOWN buttons to select the desired units of measure.	
10) From the UNITS screen, one press of the RIGHT button will shift the display to the SOFTWARE REVISION screen. This shows the revision level of the software in the control.	
11) From the SOFTWARE REVISION SCREEN, one press of the right button will shift the display to the ERRORS screen. This shows the error history of the heater. "0 ERRORS" means that no errors have occurred. If the heater has an error history of 4 errors: this history will be displayed on the screen as shown. "CODE 1:E0" refers to the first error and indicates it to be an E0 error. One press of the UP button will show the second error as "CODE 2:E0" error. Continued pressing of the UP or DOWN buttons will scroll through each of the errors in the history (in this case a total of 4). ERRORS indicate an undesirable condition but will not shut down the operation of the heater	

Error Codes

E0: Excessive water flow detected
Corrective action: Using the OUTLET BALL VALVE, slowly reduce water flow until the desired temperature is achieved. The temperature is proportional to the flow through the heater; the lower the flow, the higher the temperature and vice versa.

⚠ CAUTION

Keep the INLET BALL VALVE fully "OPEN". NEVER RESTRICT THE WATER FLOW USING THE INLET VALVE.

E1: Inlet temperature too hot to generate heat

12) FAULTS are communicated through the LCD display. The display will switch from the SETPOINT screen to the FAULT screen and back again every 3 seconds. FAULTS indicate an undesirable condition and will immediately shut down the operation of the heater. If faults are appearing on your heater call Eemax Technical Support for assistance.	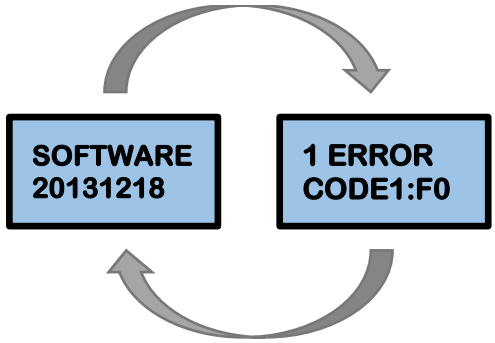

Fault Codes

F0: Outlet thermistor out of range

F1: No change in water temperature detected

F2: Dry fire detected - Optical Sensor Tripped

F3: Excessive dry fire occurrences detected

F4: Inlet thermistor out of range

13) The security of the heater settings is provided by pressing and holding the LEFT and UP buttons for 3 seconds to lock the buttons. Once locked, the buttons have no function. Press and hold the same LEFT and UP buttons for 3 seconds to unlock the buttons. The security status can be checked at any time by pressing any one button. If the system is locked, the screen will display "BUTTONS LOCKED".	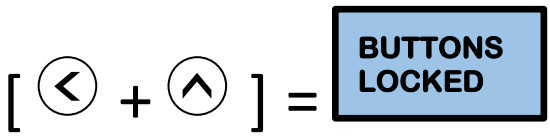
14) The display can be turned off or on. Press and hold the DOWN and RIGHT buttons for 3 seconds. If the display is off, it can be turned on by pressing and holding the same DOWN and RIGHT buttons for 3 seconds.	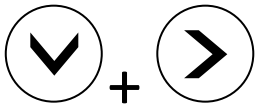

TROUBLESHOOTING PROCEDURES

If you need any assistance from our Technical Service Department, make sure you can identify this water heater by having the model number and serial number.

Model No. _____

Serial No. _____

Call 203-267-7890
TOLL FREE: 1-800-543-6163
support@eemaxinc.com

PROBLEM	POSSIBLE CAUSES		Action	IF TRUE Proceed to Action	IF FALSE Proceed to Action
Unit does not power on	Main Power issue	A1	Check main power supply voltage is within +/- 5% of nominal. Check breaker and wire size.	A2	Provide the correct supply voltage to the heater
	Blown Fuse	A2	Check all fuses for continuity	A3	Check voltages and elements, replace fuse
	Transformer overload	A3	Check circuit breaker on 24V control transformer	A4	Check voltages and for failed PCB, Contactors-reset transformer
	Printed circuit board (PCB)	A4	Verify main PCB is plugged in at P16	Replace PCB	Check connection, and reset connector
Display ERROR E1	Water temperature entering heater is above SETPOINT	A5	Verify supply water supply temperature is below set point. Note - Heater will automatically engage when incoming water drops below set point.	A6	Adjust supply temperature below set point
	Loose PCB connection or pinched wire	A6	Check PCB connection at P7 and check wire routing	A7	Check connection, and reset connector
	Inlet thermistor failure	A7	Check thermistor for proper placement in well	Replace thermistor	Re-seat thermistor in well
Display FAULT F0	Outlet thermistor out of range	A8	Check PCB connection at P7 and check wire routing	A9	Check connection, and reset connector
	Outlet thermistor is damaged or wire is cut	A9	Check thermistor, wire, or connector for damage	Replace thermistor	A10
	Heater is frozen	A10	Verify supply and feed lines are not frozen	Un-freeze heater and check functionality	
Display FAULT F1	No change in water temperature detected	A11	Verify change in temperature by checking ACTUAL TEMP vs INLET TEMP	Lower flow rate to allow heater to operate in range of capability	A12
	Thermistor failure	A12	Follow actions A5-A7		A13
	Thermal trip at ECO/ Damaged wire	A13	Power off, Using a multimeter check continuity at PCB P17 pins 1 and 3. Check all wires for loose connection	A14	No continuity verifies a thermal trip. Shut down power and allow to cool. Verify connector is seated

	Flow rate is too high	A14	Check LOAD PCT for 100% load	Reduce flow rate, heater is operating outside of capability	A15
	Element failure	A15	Power off, Using a multimeter check continuity at between red and black wires at each element chamber	A16	No continuity- replace heater element. Check water quality
	Heating Elements not modulating	A16	Verify SSR/Triac functionality by checking current draw off each SSR/Triac by means of an amp clamp. Also verify signal wires are connected from PCB P2, P3, and P4.		No current draw- replace SSR/ Triac
Display FAULT	Ambient light is causing the optical (overheat) sensors to trip.	A17	Unit is to be operated with the cover on or (if NEMA equipped) door closed when power is applied to the unit.	A18	Close door, or reinstall cover
	Air is present in the heating chamber	A18	Verify air is not present in the system by checking for a red led light on the heating chamber. Look between the black manifolds into the clear tube sections for air bubbles.	Remove air by installing an air scrubber prior to heater, or flushing system thoroughly before use. Check all wire connections	Replace light sensor board
	Loose /cut wire to optical sensors	A19	Verify 5VDC is present on the last optical sensor in the chain by using a multimeter set for dc voltage at the connector P12 with one meter lead on the red wire and the other on the black wire.	Check A17 and A18 again	Call Eemax for support
Display FAULT F3	Multiple dry fire conditions detected (FAULT F2) more than 3 times	A20	Recheck actions A17-A19. Shut down power and restart.		Replace main PCB and light sensor boards
Display FAULT F4	Inlet thermistor out of range	A21	Verify inlet thermistor is properly seated in thermal well	Verify inlet temperature is not below freezing, above set point temperature, or heater is piped backwards	Replace thermistor inlet or outlet or both
No heat	Turn-on flow rate not satisfied	A22	Toggle through display to verify FLOWRATE and TURN-ON	Increase water flow rate above TURN-ON setting	Check wiring to flowmeter.
	Display states FLOW ???	A23	Power off unit, and verify no faults are found. Verify flow meter harness is seated in terminal P12 on the main PCB and at flow meter PCB	Call Eemax for support, firmware reload may be required	If faults found reference above

Note: Error code history is not self-clearing. Unit keeps track of past errors. Error codes do not necessarily mean there is a current error.

TECHNICAL SUPPORT FORM

PERFORM STEPS BELOW BEFORE CALLING TECHNICAL SUPPORT

1 (800) 543-6163

WATER HEATER

MODEL # _____ SERIAL # _____

Inlet Water Pressure _____ Inlet Water Temperature _____

Incoming Voltage

L1 _____

L2 _____

L3 _____



Testing Elements

Amp draw on each heating element, place clamp on each red wire on inlet side of contactor.

E1 _____ E2 _____ E3 _____

E4 _____ E5 _____ E6 _____



Testing Elements

Ohm out heating elements: place #1 lead on 1 terminal on right side of SSR (FIG 1); place #2 lead (FIG 2) on the matching numbered red wire on outlet side of contactor



FIG 1

Wire #1 TAG



FIG 2

GPM FLOW RATE _____



LOAD PERCENTAGE _____



Testing Points

Testing optical sensors:

Ohm out optical sensors: find jack plug p5 on circuit board and place #1 lead on the blue wire, then place #2 lead on the on the blue wire on the back right optical board. Move #2 lead to each blue wire on optical boards to verify continuity. Repeat with black wire.

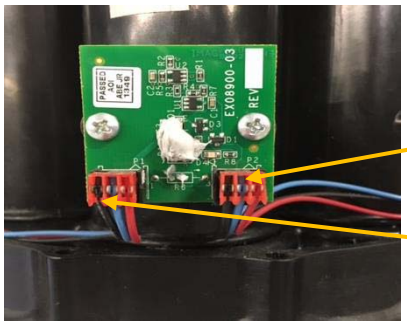

Lead placement: TEST BLUE AND BLACK SEPERATELY. PUT 1 LEAD ON BLUE WIRE ON P5 PLUG THEN OTHER LEAD GOES TO EACH BLUE WIRE ALONG OPTICAL SENSORS. REPEAT WITH BLACK WIRE.

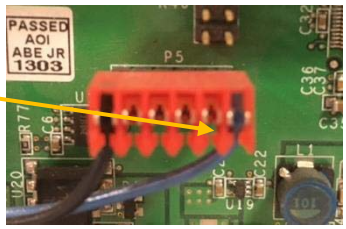

Test ECO's (electric cut offs):

To check ECO'S, on jack plug P17 put leads between top and bottom contact. If no continuity, then check across each ECO



Test points for individual ECO

Test points to check all ECOs

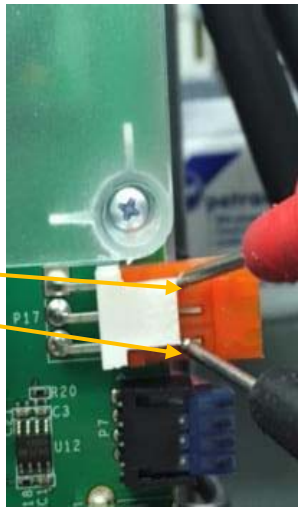

Configuration Parameters Loading Guide

Record and document any error codes on display, inserting USB will erase all code history. Then Disconnect power from the heater by turning off the circuit breaker.

ERROR CODES:



Your heater may or may not be installed in a NEMA 4/4X cabinet. For units with the NEMA cabinet, remove the 5 mounting screws to remove the cover.



Plug in the USB



Turn on the power



Home screen will appear first.	
The heater has recognized the USB drive	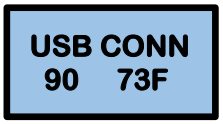
CNF file has been successfully loaded-IF “CNF ERR” is displayed, try removing reseating the USB into the slot.	
It is now OK to turn off the power, remove the USB and replace the cover	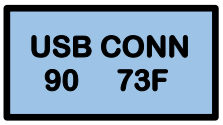

TYPICAL SAFETY SHOWER or POINT OF USE INSTALLATION

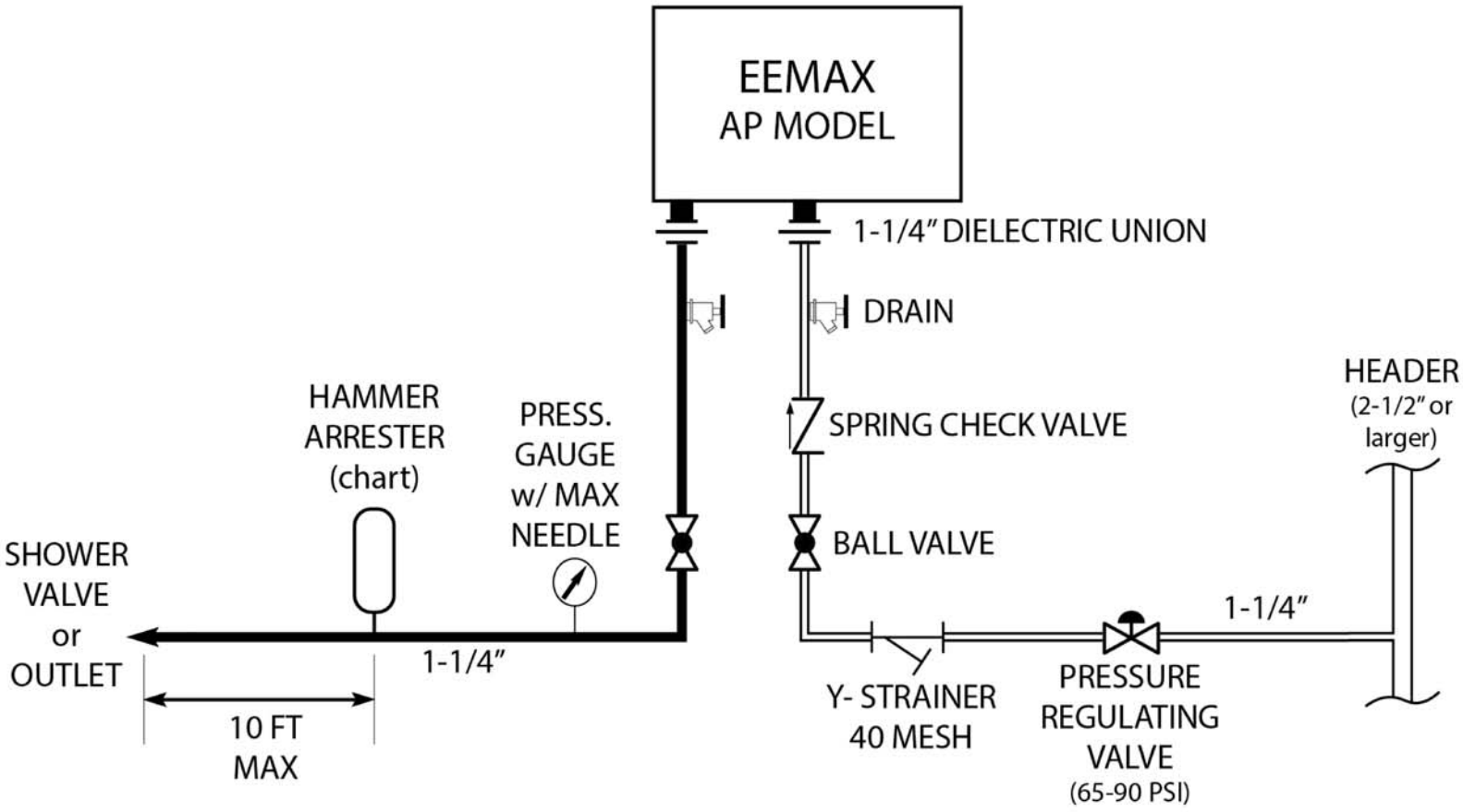

SINGLE IN RECIRCULATION LOOP

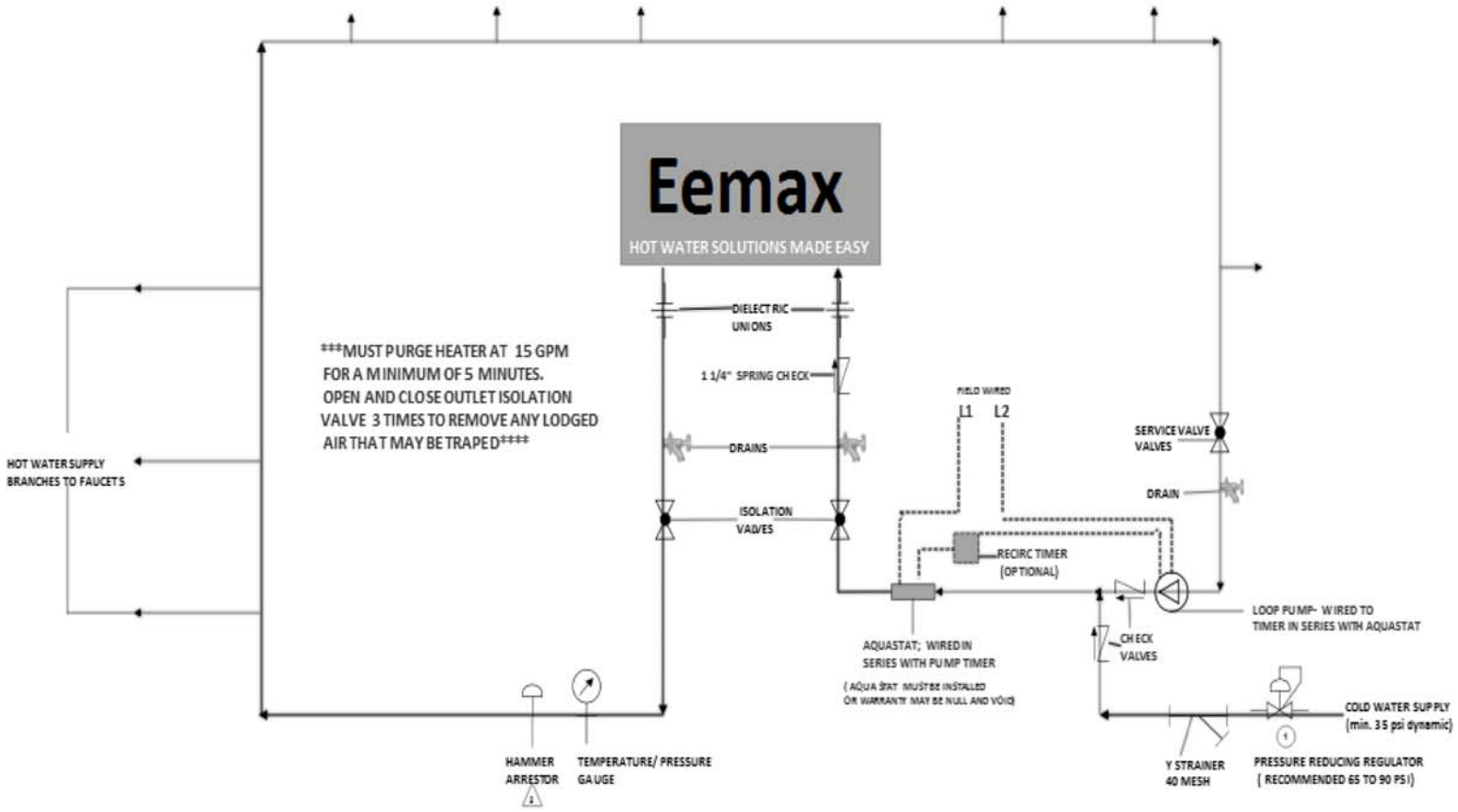

NOTES:

1. CHECK LOCAL CODES
2. WATER HAMMER ARRESTOR MUST BE INSTALLED CHECK MANUFACTURERS INSTALLATION INSTRUCTIONS FOR PROPER LOCATION AND SIZING
3. SLOW ACTING VALVES RECOMMENDED TO PREVENT POSSIBLE DAMAGE DUE TO WATER HAMMER

RELIEF VALVE NOT REQUIRED ON AP HEATERS- REFER TO STATE AND LOCAL CODES

CHECK VALVE MUST BE INSTALLED IN OUTLET PORT IF HEATER IS TO BE LOCATED ABOVE FIXTURES

DEPENDING ON LOOP LENGTH AND SIZE MULTIPLE AQUASTATS MAY BE NEEDED IN SYSTEM. ALL AQUASTATS WIRED IN PARALLEL WITH CIRCULATOR TIMER

Eemax

400 CAPTAIN NEVILLE DR.
WATER BURY, CT. 06075
1-800-543-6163
support@Eemaxinc.com

SINGLE IN RECIRCULATION LOOP

DRAWING IS A RECOMMENDATION ONLY.
THIS IS NOT AN ENGINEERING DRAWING; IT IS INTENDED ONLY AS A GUIDE AND NOT AS A REPLACEMENT FOR PROFESSIONAL ENGINEERING PROJECT DRAWINGS. THIS DRAWING IS NOT INTENDED TO DESCRIBE A COMPLETE SYSTEM. IT IS UP TO THE CONTRACTOR OR ENGINEER TO DETERMINE THE NECESSARY COMPONENTS AND CONFIGURATION OF THE PARTICULAR SYSTEM TO BE INSTALLED. THE DRAWING DOES NOT IMPLY COMPLIANCE WITH LOCAL BUILDING CODE REQUIREMENTS. IT IS THE RESPONSIBILITY OF THE ENGINEER OR CONTRACTOR TO ENSURE THAT THE INSTALLATION IS IN ACCORDANCE WIT ALL LOCAL BUILDING CODES. CONFER WITH LOCAL BUILDING OFFICIALS BEFORE INSTALLATION.

RECIRCULATION LOOP THROUGH HEATER OPTION 1

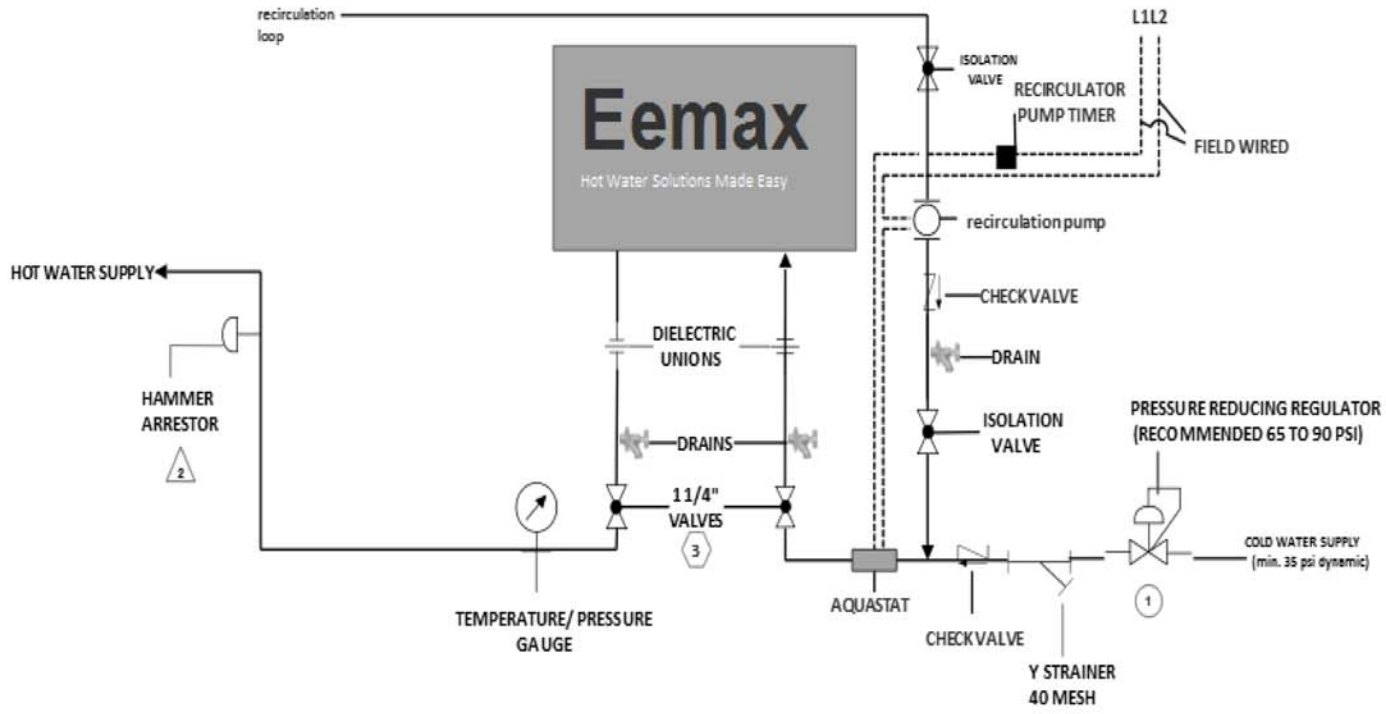

*****MUST PURGE WATER HEATER FOR A MINIMUM OF 5 MINUTES AT A MINIMUM OF 15 GPM. OPEN AND CLOSE DRAIN VALVE 3 TIMES WHILE PURGING TO REMOVE ANY AIR POCKETS. *****

NOTES:

1. CHECK LOCAL CODES
2. WATER HAMMER ARRESTOR MUST BE INSTALLED CHECK MANUFACTURERS INSTALLATION INSTRUCTIONS FOR PROPER LOCATION AND SIZE
3. SLOW ACTING VALVES ARE RECOMMENDED TO PREVENT POSSIBLE DAMAGE TO HEATERS DUE TO WATER HAMMER

CHECK VALVE MUST BE INSTALLED ON THE OUTLET PORT IF HEATER IS TO BE LOCATED ABOVE FIXTURE TO PREVENT AIR ACCUMULATION

RELIEF VALVE NOT REQUIRED ON AP HEATERS- REFER TO STATE AND LOCAL CODES

Eemax™

400 CAPTAIN NEVILLE DR.
WATERBURY, CT. 06075
1-800-543-6163
support@eemaxinc.com

RECIRCULATION LOOP THROUGH HEATER OPTION 1

DRAWING SCHEMATIC IS A RECOMMENDATION ONLY.

THIS IS NOT AN ENGINEERING DRAWING. IT IS INTENDED ONLY AS A GUIDE AND NOT AS A REPLACEMENT FOR PROFESSIONAL ENGINEERING PROJECT DRAWINGS. THIS DRAWING IS NOT INTENDED TO DESCRIBE A COMPLETE SYSTEM. IT IS UP TO THE CONTRACTOR OR ENGINEER TO DETERMINE THE NECESSARY COMPONENTS AND CONFIGURATION OF THE PARTICULAR SYSTEM TO BE INSTALLED. THE DRAWING DOES NOT IMPLY COMPLIANCE WITH LOCAL BUILDING CODE REQUIREMENTS. IT IS THE RESPONSIBILITY OF THE ENGINEER OR CONTRACTOR TO ENSURE THAT THE INSTALLATION IS IN ACCORDANCE WITH ALL LOCAL BUILDING CODES. CONFER WITH LOCAL BUILDING OFFICIALS BEFORE INSTALLATION.

SINGLE WATER HEATER

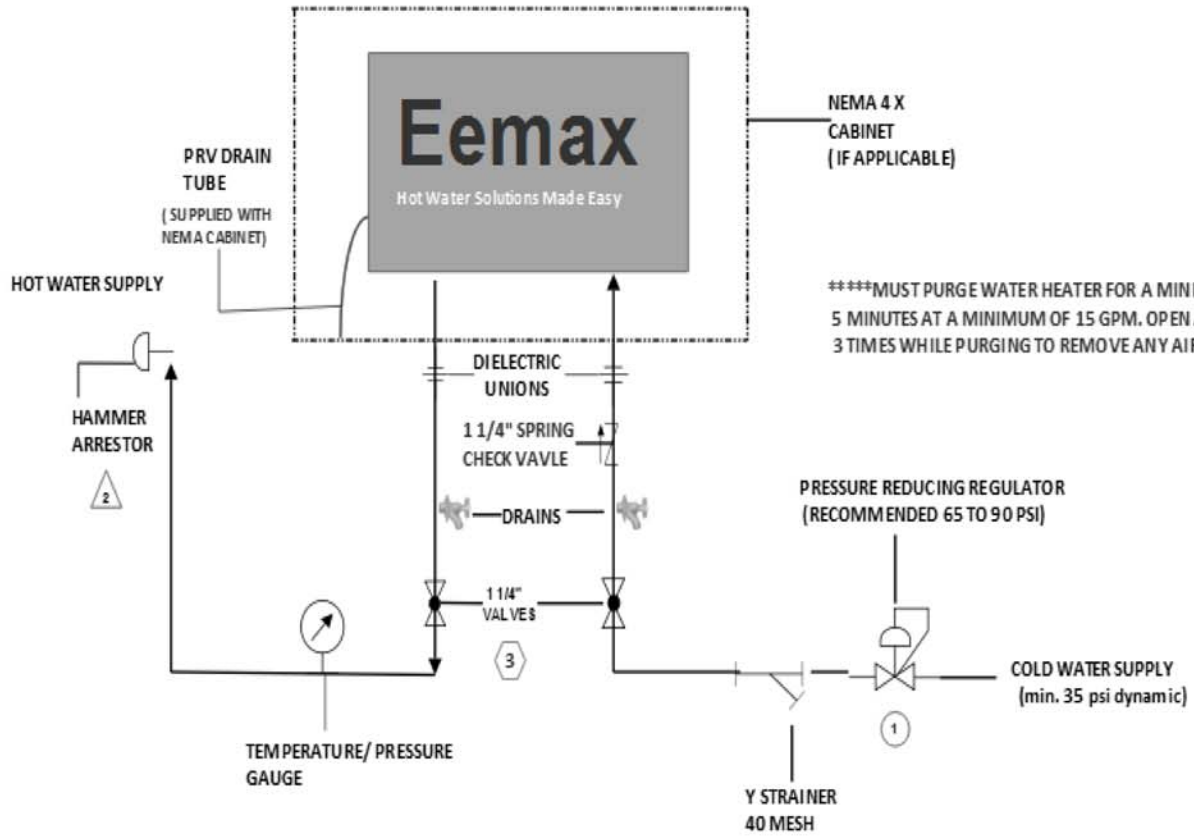

NOTES:

1. CHECK LOCAL CODES
2. WATER HAMMER ARRESTOR MUST BE INSTALLED CHECK MANUFACTURERS INSTALLATION INSTRUCTIONS FOR PROPER LOCATION AND SIZE
3. SLOW ACTING VALVES ARE RECOMMENDED TO PREVENT POSSIBLE DAMAGE TO HEATERS DUE TO WATER HAMMER

CHECK VALVE MUST BE INSTALLED ON THE OUTLET PORT IF HEATER IS TO BE LOCATED ABOVE FIXTURE TO PREVENT AIR ACCUMULATION

RELIEF VALVE NOT REQUIRED ON AP HEATERS- REFER TO STATE AND LOCAL CODES

Eemax™

400 CAPTAIN NEVILLE DR.
WATERBURY , CT. 06075
1-800-543-6163
support@eemaxinc.com

SINGLE WATER HEATER

DRAWING SCHEMATIC IS A RECOMMENDATION ONLY.

THIS IS NOT AN ENGINEERING DRAWING. IT IS INTENDED ONLY AS A GUIDE AND NOT AS A REPLACEMENT FOR PROFESSIONAL ENGINEERING PROJECT DRAWINGS. THIS DRAWING IS NOT INTENDED TO DESCRIBE A COMPLETE SYSTEM. IT IS UP TO THE CONTRACTOR OR ENGINEER TO DETERMINE THE NECESSARY COMPONENTS AND CONFIGURATION OF THE PARTICULAR SYSTEM TO BE INSTALLED. THE DRAWING DOES NOT IMPLY COMPLIANCE WITH LOCAL BUILDING CODE REQUIREMENTS. IT IS THE RESPONSIBILITY OF THE ENGINEER OR CONTRACTOR TO ENSURE THAT THE INSTALLATION IS IN ACCORDANCE WITH ALL LOCAL BUILDING CODES. CONFER WITH LOCAL BUILDING OFFICIALS BEFORE INSTALLATION.

SINGLE HEATER WITH TANK

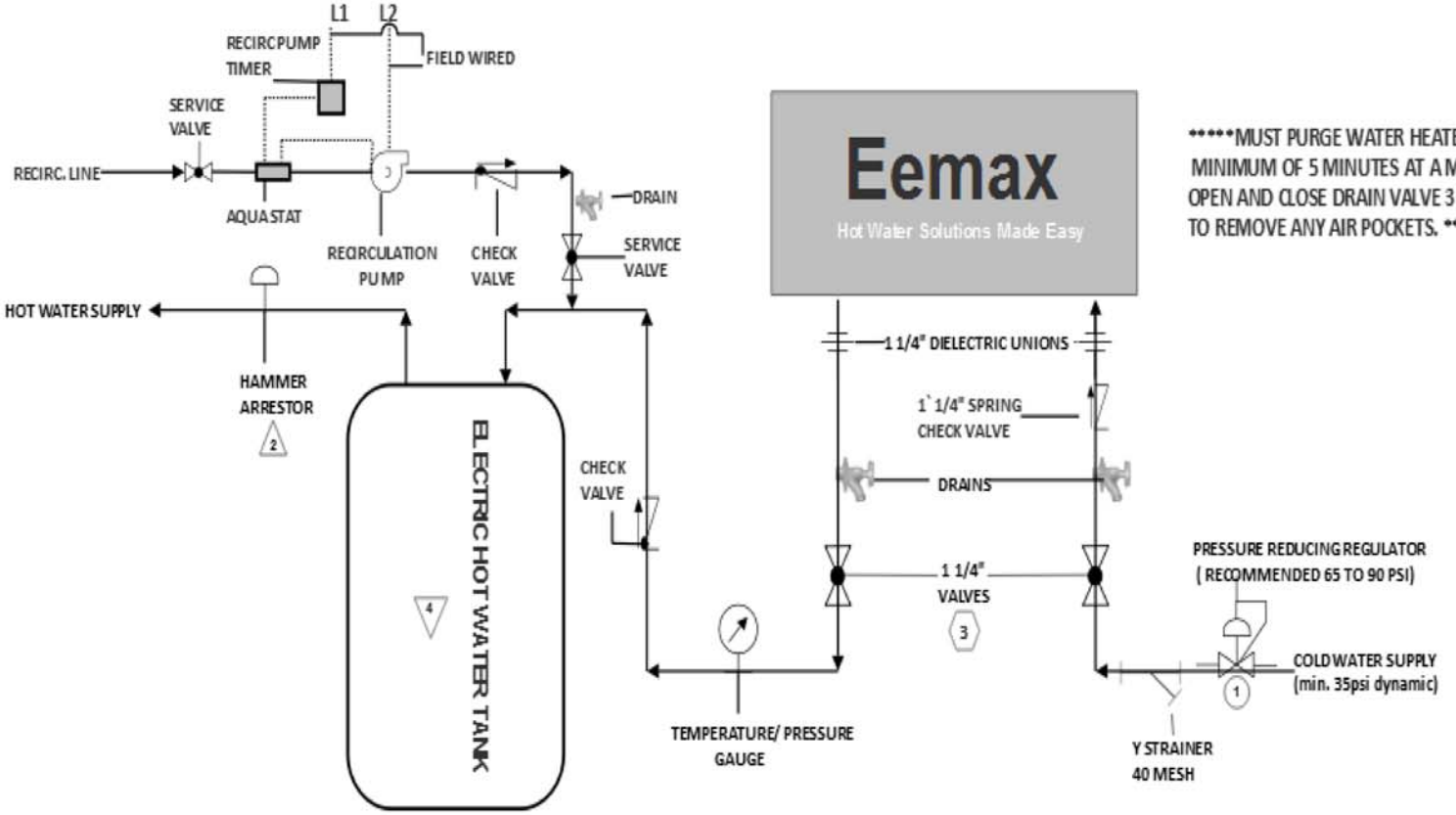

*****MUST PURGE WATER HEATER FOR A MINIMUM OF 5 MINUTES AT A MINIMUM OF 15 GPM. OPEN AND CLOSE DRAIN VALVE 3 TIMES WHILE PURGING TO REMOVE ANY AIR POCKETS. *****

NOTES:

1. CHECK LOCAL CODES
2. WATER HAMMER ARRESTOR MUST BE INSTALLED CHECK MANUFACTURERS INSTALLATION INSTRUCTIONS FOR PROPER LOCATION AND SIZE
3. SLOW ACTING VALVES ARE RECOMMENDED TO PREVENT DAMAGE TO HEATERS
4. AQUA STAT SET TO DESIRED LOOP TEMPERATURE

CHECK VALVE MUST BE INSTALLED IN OUTLET PORT IF HEATER IS TO BE LOCATED ABOVE TANK OR FIXTURES

RELIEF VALVE NOT REQUIRED ON AP HEATERS- REFER TO STATE AND LOCAL CODES

Eemax™

400 CAPTAIN NEVILLE DR.
WATERBURY , CT. 06075
1-800-543-6163
support@Eemaxinc.com

SINGLE HEATER WITH TANK

DRAWING IS A RECOMMENDATION ONLY
THIS IS NOT AN ENGINEERING DRAWING; IT IS INTENDED ONLY AS A GUIDE AND NOT AS A REPLACEMENT FOR PROFESSIONAL ENGINEERING PROJECT DRAWINGS. THIS DRAWING IS NOT INTENDED TO DESCRIBE A COMPLETE SYSTEM. IT IS UP TO THE CONTRACTOR OR ENGINEER TO DETERMINE THE NECESSARY COMPONENTS AND CONFIGURATION OF THE PARTICULAR SYSTEM TO BE INSTALLED. THE DRAWING DOES NOT IMPLY COMPLIANCE WITH LOCAL BUILDING CODE REQUIREMENTS. IT IS THE RESPONSIBILITY OF THE ENGINEER OR CONTRACTOR TO ENSURE THAT THE INSTALLATION IS IN ACCORDANCE WITH ALL LOCAL BUILDING CODES. CONFER WITH LOCAL BUILDING OFFICIALS BEFORE INSTALLATION

SINGLE HEATER WITH TANK WITH RECIRCULATION LOOP

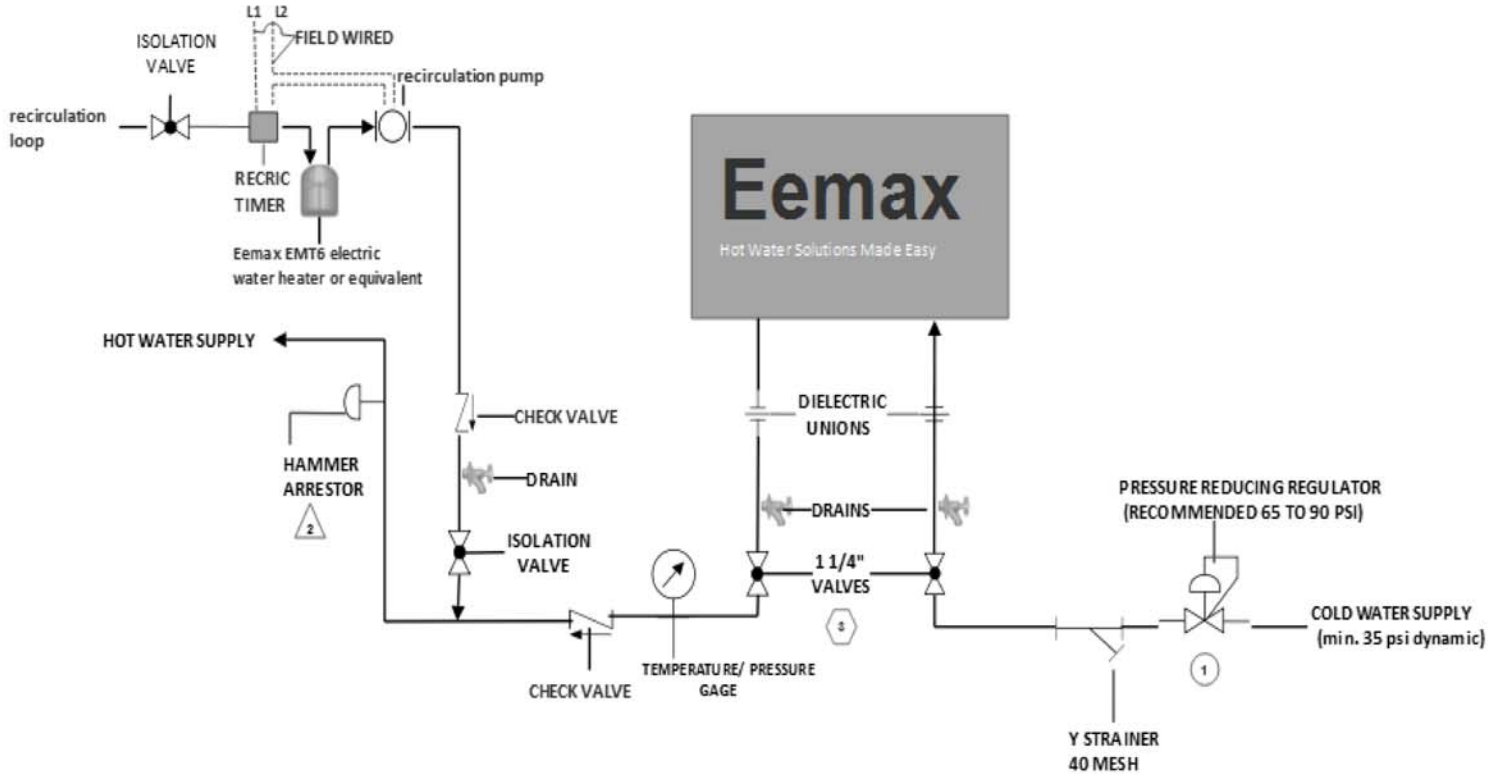

*****MUST PURGE WATER HEATER FOR A MINIMUM OF 5 MINUTES AT A MINIMUM OF 15 GPM. OPEN AND CLOSE DRAIN VALVE 3 TIMES WHILE PURGING TO REMOVE ANY AIR POCKETS. *****

NOTES:

1. CHECK LOCAL CODES
2. WATER HAMMER ARRESTOR MUST BE INSTALLED CHECK MANUFACTURERS INSTALLATION INSTRUCTIONS FOR PROPER LOCATION AND SIZE
3. SLOW ACTING VALVES ARE RECOMMENDED TO PREVENT POSSIBLE DAMAGE TO HEATERS DUE TO WATER HAMMER

CHECK VALVE MUST BE INSTALLED ON THE OUTLET PORT IF HEATER IS TO BE LOCATED ABOVE FIXTURE TO PREVENT AIR ACCUMULATION

RELIEF VALVE NOT REQUIRED ON AP HEATERS- REFER TO STATE AND LOCAL CODES

Eemax™

400 CAPTAIN NEVILLE DR.
WATERBURY, CT. 06075
1-800-543-6163
support@eemaxinc.com

SINGLE WATER HEATER WITH RECIRCULATION LOOP

DRAWING SCHEMATIC IS A RECOMMENDATION ONLY.

THIS IS NOT AN ENGINEERING DRAWING. IT IS INTENDED ONLY AS A GUIDE AND NOT AS A REPLACEMENT FOR PROFESSIONAL ENGINEERING PROJECT DRAWINGS. THIS DRAWING IS NOT INTENDED TO DESCRIBE A COMPLETE SYSTEM. IT IS UP TO THE CONTRACTOR OR ENGINEER TO DETERMINE THE NECESSARY COMPONENTS AND CONFIGURATION OF THE PARTICULAR SYSTEM TO BE INSTALLED. THE DRAWING DOES NOT IMPLY COMPLIANCE WITH LOCAL BUILDING CODE REQUIREMENTS. IT IS THE RESPONSIBILITY OF THE ENGINEER OR CONTRACTOR TO ENSURE THAT THE INSTALLATION IS IN ACCORDANCE WITH ALL LOCAL BUILDING CODES. CONFER WITH LOCAL BUILDING OFFICIALS BEFORE INSTALLATION.

SERIES APPLICATION

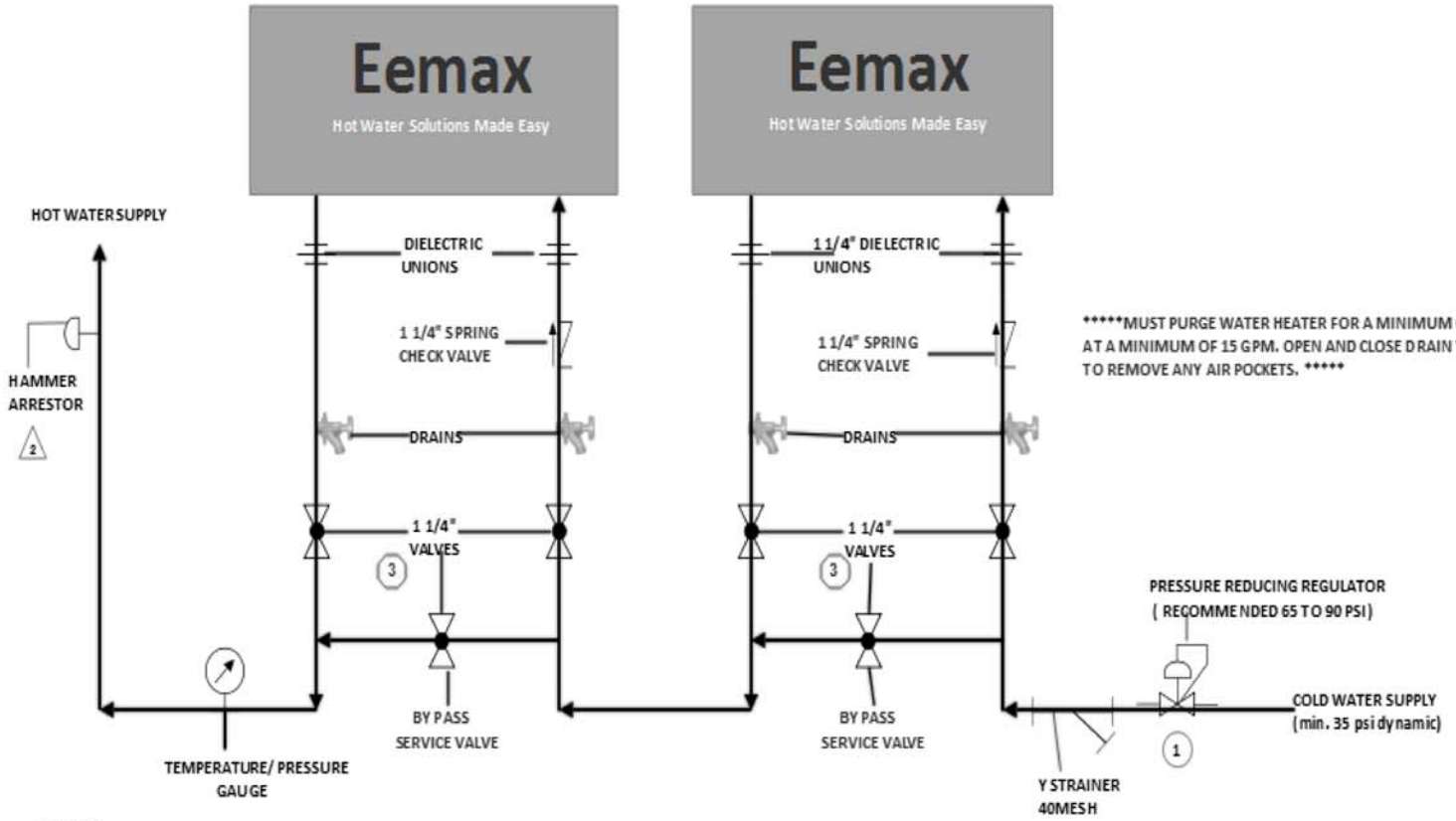

NOTES:

1. CHECK LOCAL CODES
2. WATER HAMMER ARRESTOR MUST BE INSTALLED
   CHECK MANUFACTURERS INSTALLATION INSTRUCTIONS FOR PROPER LOCATION AND SIZING
3. SLOW ACTING VALVES RECOMMENDED TO PREVENT POSSIBLE DAMAGE DUE TO WATER HAMMER
   RELIEF VALVE NOT REQUIRED ON AP HEATERS- REFER TO STATE AND LOCAL CODES

TOTAL PRESSURE DROP IS EQUAL TO THE TOTAL OF ALL PRESSURE DROPS ACROSS ALL WATER HEATERS COMBINED

CHECK VALVE MUST BE INSTALLED ON OUTLET PORT IF HEATER IS TO BE LOCATED ABOVE FIXTURES

Eemax™
400 CAPTAIN NEVILLE DR.
WATERBURY, CT.06075
1-800-543-6163
support@Eemaxinc.com

SERIES APPLICATION

DRAWING IS A RECOMMENDATION ONLY

THIS IS NOT AN ENGINEERING DRAWING; IT IS INTENDED ONLY AS A GUIDE AND NOT AS A REPLACEMENT FOR PROFESSIONAL ENGINEERING PROJECT DRAWINGS. THIS DRAWING IS NOT INTENDED TO DESCRIBE A COMPLETE SYSTEM. IT IS UP TO THE CONTRACTOR OR ENGINEER TO DETERMINE THE NECESSARY COMPONENTS AND CONFIGURATION OF THE PARTICULAR SYSTEM TO BE INSTALLED. THE DRAWING DOES NOT IMPLY COMPLIANCE WITH LOCAL BUILDING CODE REQUIREMENTS. IT IS THE RESPONSIBILITY OF THE ENGINEER OR CONTRACTOR TO ENSURE THAT THE INSTALLATION IS IN ACCORDANCE WITH ALL LOCAL BUILDING CODES. CONFER WITH LOCAL BUILDING OFFICIALS BEFORE INSTALLATION.

SERIES WITH TANK AND RECIRCULATION LOOP

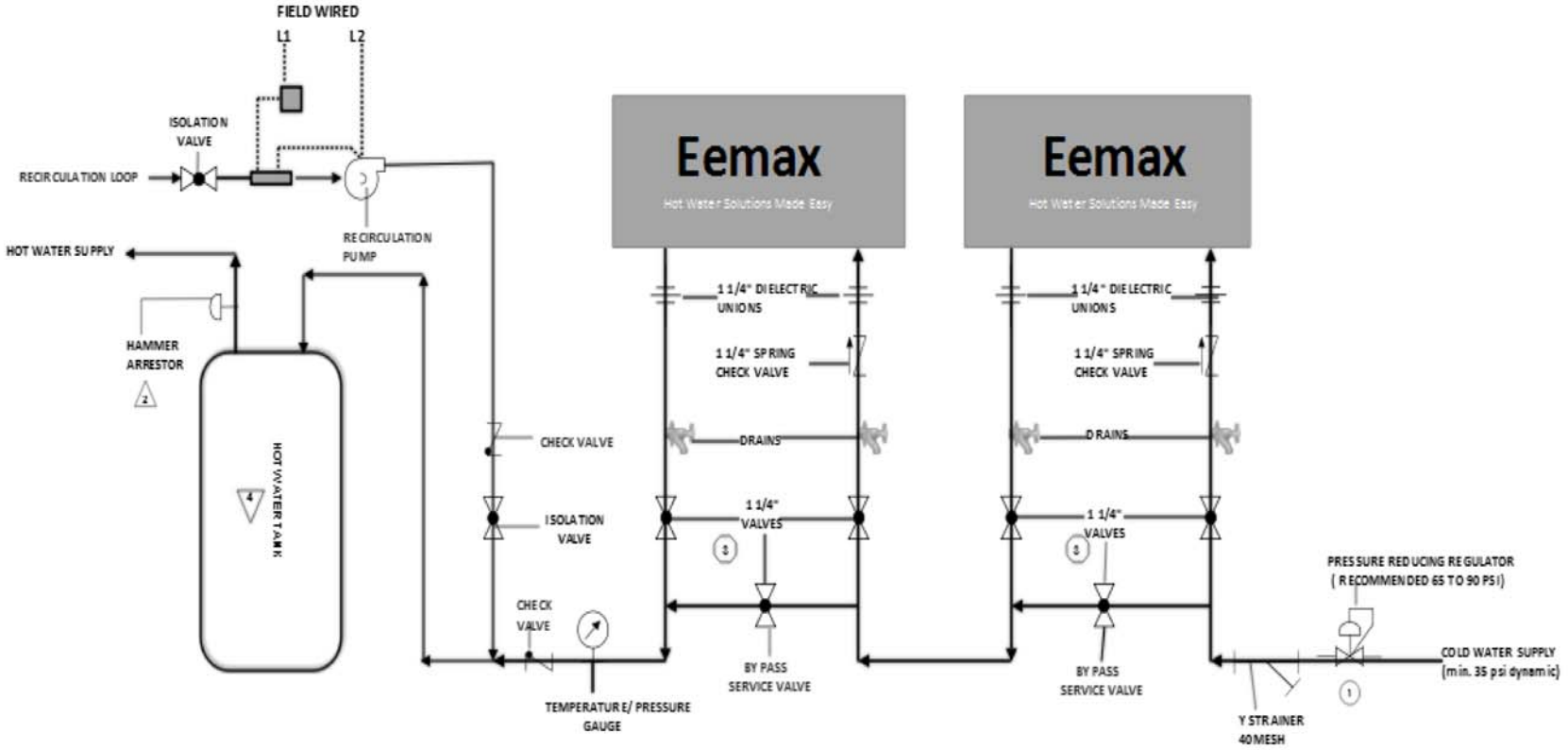

*****MUST PURGE WATER HEATER FOR A MINIMUM OF 5 MINUTES AT A MINIMUM OF 15 GPM. OPEN AND CLOSE DRAIN VALVE 3 TIMES WHILE PURGING TO REMOVE ANY AIR POCKETS. *****

NOTES:

1. CHECK LOCAL CODES
2. WATER HAMMER ARRESTOR MUST BE INSTALLED CHECK MANUFACTURERS INSTALLATION INSTRUCTIONS FOR PROPER LOCATION AND SIZING
3. SLOW ACTING VALVES RECOMMENDED TO PREVENT POSSIBLE DAMAGE DUE TO WATER HAMMER
4. AQUASTAT SET TO DESIRED SUPPLY TEMPERATURE

RELIEF VALVE NOT REQUIRED ON AP HEATERS- REFER TO STATE AND LOCAL CODES

TOTAL PRESSURE DROP IS EQUAL TO THE TOTAL OF ALL PRESSURE DROPS ACROSS ALL WATER HEATERS COMBINED

CHECK VALVE MUST BE INSTALLED ON OUTLET PORT IF HEATER IS TO BE LOCATED ABOVE THE TANKS OR OUTLETS

Eemax™

400 CAPTAIN NEVILLE DR.
WATERBURY, CT.06075
1-800-543-6163
support@Eemaxinc.com

SERIES WITH TANK AND RECIRCULATION LOOP

DRAWING IS A RECOMMENDATION ONLY

THIS IS NOT AN ENGINEERING DRAWING; IT IS INTENDED ONLY AS A GUIDE AND NOT AS A REPLACEMENT FOR PROFESSIONAL ENGINEERING PROJECT DRAWINGS. THIS DRAWING IS NOT INTENDED TO DESCRIBE A COMPLETE SYSTEM. IT IS UP TO THE CONTRACTOR OR ENGINEER TO DETERMINE THE NECESSARY COMPONENTS AND CONFIGURATION OF THE PARTICULAR SYSTEM TO BE INSTALLED. THE DRAWING DOES NOT IMPLY COMPLIANCE WITH LOCAL BUILDING CODE REQUIREMENTS. IT IS THE RESPONSIBILITY OF THE ENGINEER OR CONTRACTOR TO ENSURE THAT THE INSTALLATION IS IN ACCORDANCE WITH ALL LOCAL BUILDING CODES. CONFER WIT LOCAL BUILDING OFFICIALS BEFORE INSTALLATION.

SERIES APPLICATION WITH RECIRCULATION LOOP

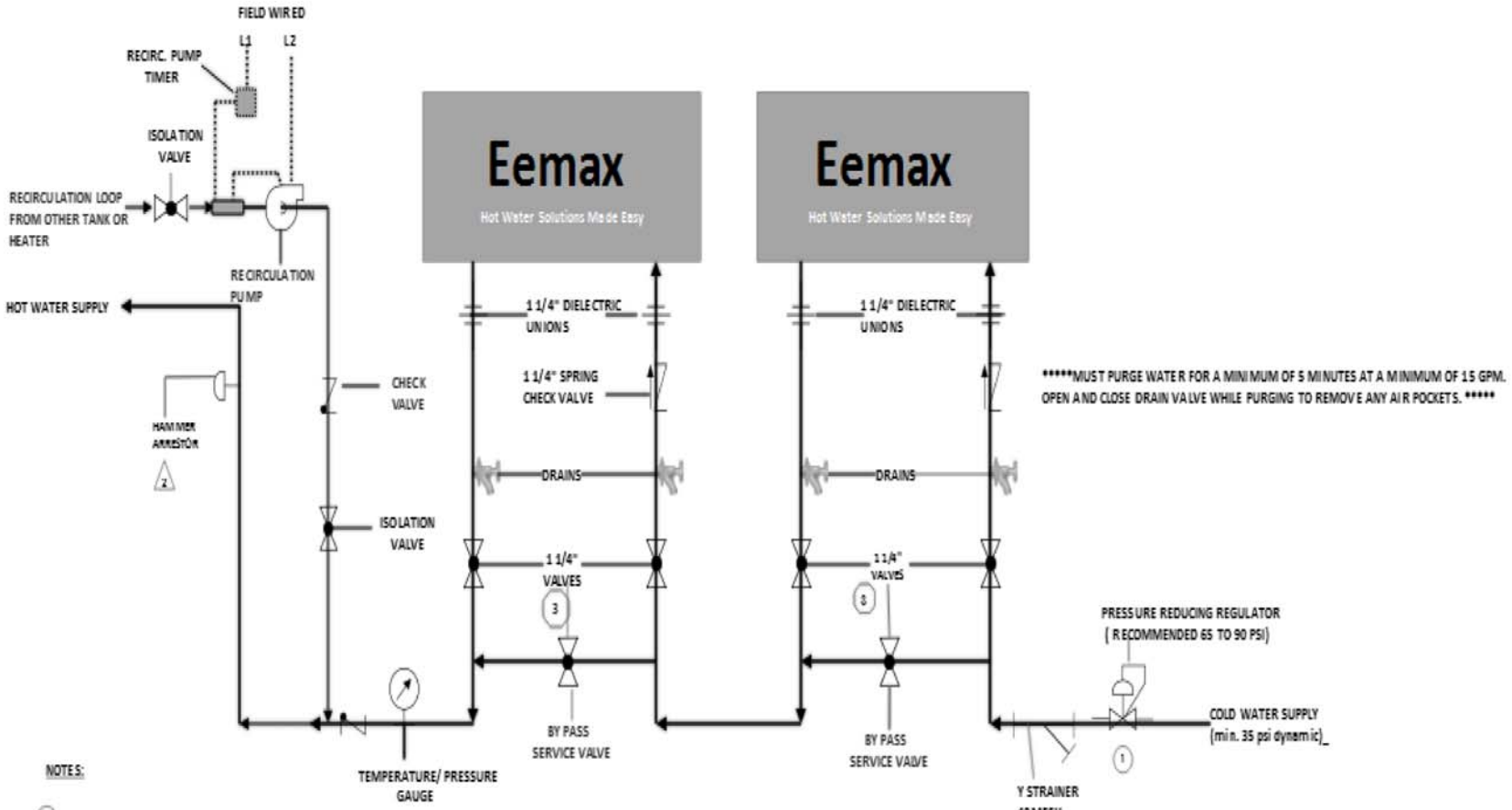

NOTES:

1. CHECK LOCAL CODES
2. WATER HAMMER ARRESTOR MUST BE INSTALLED CHECK MANUFACTURERS INSTALLATION INSTRUCTIONS FOR PROPER LOCATION AND SIZING
3. SLOW ACTING VALVES RECOMMENDED TO PREVENT POSSIBLE DAMAGE DUE TO WATER HAMMER

TOTAL PRESSURE DROP IS EQUAL TO THE TOTAL OF ALL PRESSURE DROPS ACROSS ALL WATER HEATERS COMBINED

CHECK VALVE MUST BE INSTALLED IN OUTLET PORT IF HEATER IS TO BE LOCATED ABOVE FIXTURES

RELIEF VALVE NOT REQUIRED ON AP HEATERS- REFER TO STATE AND LOCAL CODES

Eemax™

400 CAPTAIN NEVILLE DR.
WATERBURY, CT.06075
1-800-543-6163
support@Eemaxinc.com

SERIES APPLICATION WITH RECIRCULATION LOOP

DRAWING IS A RECOMMENDATION ONLY

THIS IS NOT AN ENGINEERING DRAWING; IT IS INTENDED ONLY AS A GUIDE AND NOT AS A REPLACEMENT FOR PROFESSIONAL ENGINEERING PROJECT DRAWINGS. THIS DRAWING IS NOT INTENDED TO DESCRIBE A COMPLETE SYSTEM. IT IS UP TO THE CONTRACTOR OR ENGINEER TO DETERMINE THE NECESSARY COMPONENTS AND CONFIGURATION OF THE PARTICULAR SYSTEM TO BE INSTALLED. THE DRAWING DOES NOT IMPLY COMPLIANCE WITH LOCAL BUILDING CODE REQUIREMENTS. IT IS THE RESPONSIBILITY OF THE ENGINEER OR CONTRACTOR TO ENSURE THAT THE INSTALLATION IS IN ACCORDANCE WITH ALL LOCAL BUILDING CODES. CONFER WITH LOCAL BUILDING OFFICIALS BEFORE INSTALLATION.

PARALLEL APPLICATION

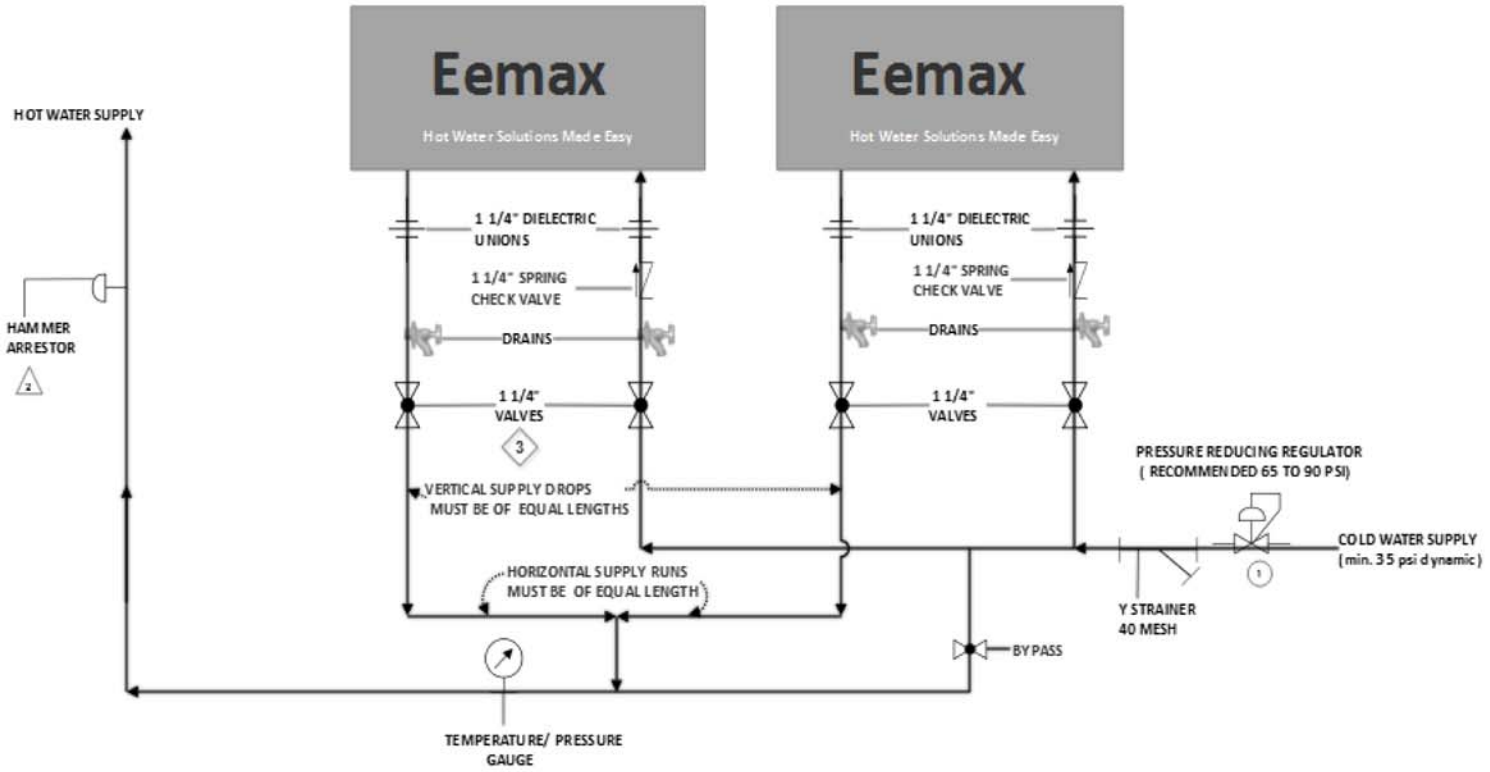

*****MUST PURGE WATER HEATER FOR A MINIMUM OF 5 MINUTES AT A MINIMUM OF 15 GPM. OPEN AND CLOSE DRAIN VALVE 3 TIMES WHILE PURGING TO REMOVE ANY AIR POCKETS*****

NOTES:

1. CHECK LOCAL CODES
2. WATER HAMMER ARRESTOR MUST BE INSTALLED CHECK MANUFACTURERS INSTALLATION INSTRUCTIONS FOR PROPER LOCATION AND SIZING
3. SLOW ACTING VALVES RECOMMENDED TO PREVENT POSSIBLE DAMAGE DUE TO WATER HAMMER

RELIEF VALVE NOT REQUIRED ON AP HEATERS- REFER TO STATE AND LOCAL CODES

CHECK VALVE MUST BE INSTALLED IN OUTLET PORT IF HEATER IS TO BE LOCATED ABOVE FIXTURES

*** TURN ON RATE IS 6 GPM
*** MUST OBTAIN 12 GPM TO REACH 180 DEGREES

Eemax™

400 CAPTAIN NEVILLE DR.
WATER BURY, CT. 06075
1-800-543-6163
support@Eemaxinc.com

PARALLEL APPLICATION

DRAWING IS A RECOMMENDATION ONLY.
THIS IS NOT AN ENGINEERING DRAWING; IT IS INTENDED ONLY AS A GUIDE AND NOT AS A REPLACEMENT FOR PROFESSIONAL ENGINEERING PROJECT DRAWINGS. THIS DRAWING IS NOT INTENDED TO DESCRIBE A COMPLETE SYSTEM. IT IS UP TO THE CONTRACTOR OR ENGINEER TO DETERMINE THE NECESSARY COMPONENTS AND CONFIGURATION OF THE PARTICULAR SYSTEM TO BE INSTALLED. THE DRAWING DOES NOT IMPLY COMPLIANCE WITH LOCAL BUILDING CODE REQUIREMENTS. IT IS THE RESPONSIBILITY OF THE ENGINEER OR CONTRACTOR TO ENSURE THAT THE INSTALLATION IS IN ACCORDANCE WITH ALL LOCAL BUILDING CODES. CONFER WITH LOCAL BUILDING OFFICIALS BEFORE INSTALLATION.

PARALLEL WITH RECIRCULATION LOOP

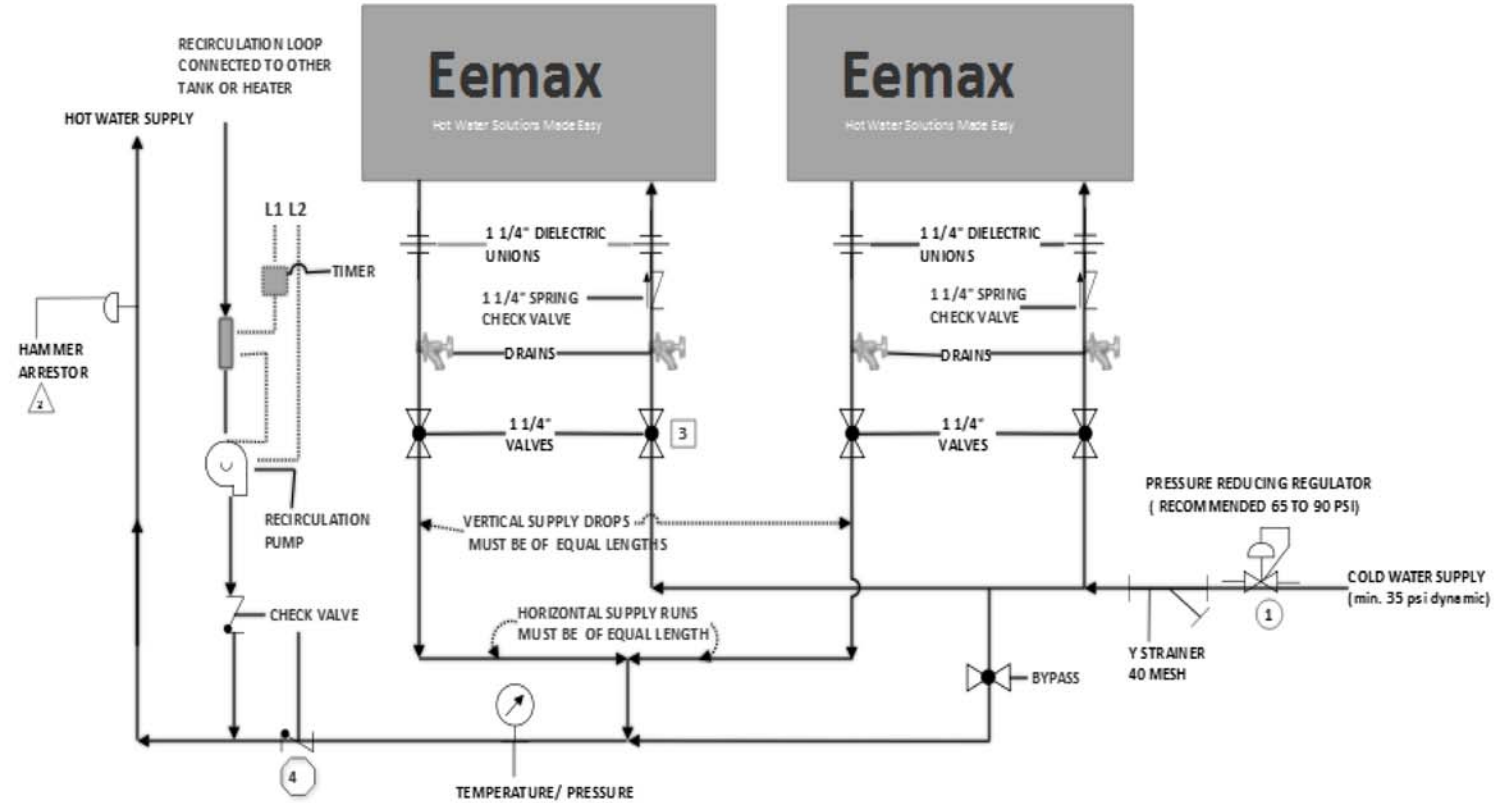

***** MUST PURGE WATER HEATER FOR A MINIMUM OF 5 MINUTES AT A MINIMUM OF 15 GPM. OPEN AND CLOSE DRAIN VALVE 3 TIMES WHILE PURGING TO REMOVE ANY AIR POCKETS. *****

NOTES:

1. CHECK LOCAL CODES
2. WATER HAMMER ARRESTOR MUST BE INSTALLED CHECK MANUFACTURERS INSTALLATION INSTRUCTIONS FOR PROPER LOCATION AND SIZING
3. SLOW ACTING VALVES RECOMMENDED TO PREVENT POSSIBLE DAMAGE DUE TO WATER HAMMER
4. CHECK VALVE ONLY USED IF RECIRCULATION LOOP IS INSTALLED

RELIEF VALVE NOT REQUIRED ON AP HEATERS- REFER TO STATE AND LOCAL CODES

CHECK VALVE MUST BE INSTALLED IN OUTLET PORT IF HEATER IS TO BE LOCATED ABOVE FIXTURES

*** USE OF RECIRCULATION PUMP THROUGH UNIT IS NOT RECOMMENDED

*** TURN ON RATE IS 6 GPM
*** MUST OBTAIN 12 GPM TO REACH 180 DEGREES

Eemax™

400 CAPTAIN NEVILLE DR.
WATER BURY, CT. 06075
1-800-543-6163
support@Eemaxinc.com

PARALLEL WITH RECIRCULATION LOOP

DRAWING IS A RECOMMENDATION ONLY.
THIS IS NOT AN ENGINEERING DRAWING; IT IS INTENDED ONLY AS A GUIDE AND NOT AS A REPLACEMENT FOR PROFESSIONAL ENGINEERING PROJECT DRAWINGS. THIS DRAWING IS NOT INTENDED TO DESCRIBE A COMPLETE SYSTEM. IT IS UP TO THE CONTRACTOR OR ENGINEER TO DETERMINE THE NECESSARY COMPONENTS AND CONFIGURATION OF THE PARTICULAR SYSTEM TO BE INSTALLED. THE DRAWING DOES NOT IMPLY COMPLIANCE WITH LOCAL BUILDING CODE REQUIREMENTS. IT IS THE RESPONSIBILITY OF THE ENGINEER OR CONTRACTOR TO ENSURE THAT THE INSTALLATION IS IN ACCORDANCE WITH ALL LOCAL BUILDING CODES. CONFER WITH LOCAL BUILDING OFFICIALS BEFORE INSTALLATION.

PARALLEL WITH TANK HEATER

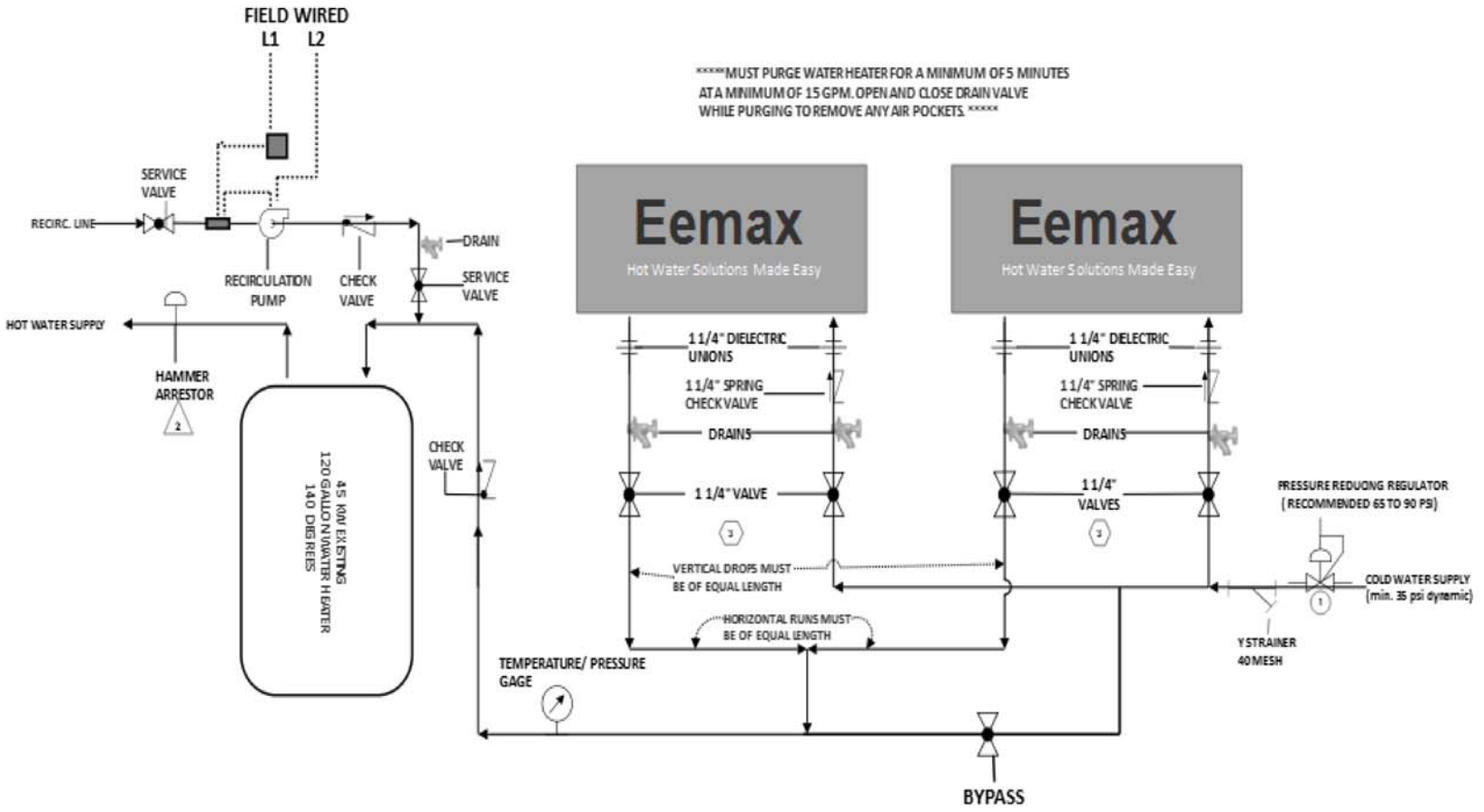

NOTES:

1. CHECK LOCAL CODES
2. WATER HAMMER ARRESTOR MUST BE INSTALLED CHECK MANUFACTURERS INSTALLATION INSTRUCTIONS FOR PROPER LOCATION AND SIZE
3. SLOW ACTING VALVES ARE RECOMMENDED TO PREVENT DAMAGE TO HEATERS

RELIEF VALVE NOT REQUIRED ON AP HEATERS- REFER TO STATE AND LOCAL CODES

CHECK VALVE MUST BE INSTALLED IN OUTLET PORTS IF HEATER IS TO BE LOCATED ABOVE TANK OR FIXTURES

Eemax™

400 CAPTAIN NEVILLE DR.
WATERBURY, CT. 06075
1-800-543-6163
support@Eemaxinc.com

PARALLEL WITH TANK HEATER

DRAWING SCHEMATIC IS A RECOMMENDATION ONLY.
THIS IS NOT AN ENGINEERING DRAWING; IT IS INTENDED ONLY AS A GUIDE AND NOT AS A REPLACEMENT FOR PROFESSIONAL ENGINEERING PROJECT DRAWINGS. THIS DRAWING IS NOT INTENDED TO DESCRIBE A COMPLETE SYSTEM. IT IS UP TO THE CONTRACTOR OR ENGINEER TO DETERMINE THE NECESSARY COMPONENTS AND CONFIGURATION OF THE PARTICULAR SYSTEM TO BE INSTALLED. THE DRAWING DOES NOT IMPLY COMPLIANCE WITH LOCAL BUILDING CODE REQUIREMENTS. IT IS THE RESPONSIBILITY OF THE ENGINEER OR CONTRACTOR TO ENSURE THAT THE INSTALLATION IS IN ACCORDANCE WITH ALL LOCAL BUILDING CODES. CONFER WITH LOCAL BUILDING OFFICIALS BEFORE INSTALLATION.

PARALLEL HEATERS WITH CIRCULATORS WITH STORAGE TANKS

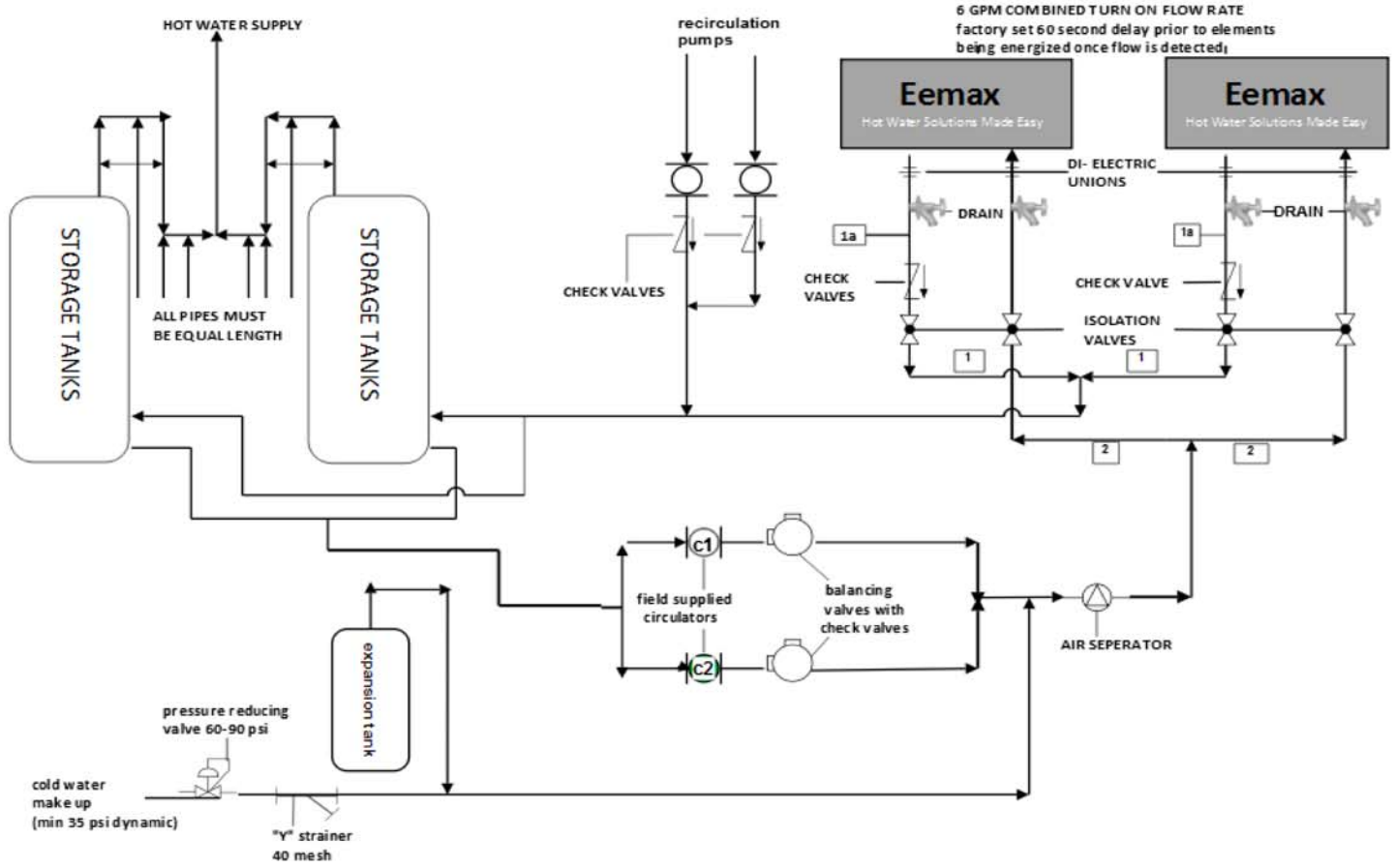

NOTES:

1 1A PIPING MUST BE OF EQUAL LENGTHS

2 PIPING MUST BE OF EQUAL LENGTHS

TANK AUQASTATS WIRED TO CIRCULATOR CONTROL BOARD. CIRCULATOR SIZING, PIPE SIZING, FLOW RATES AND CIRCULATOR CONTROL DESIGN TO BE DETERMINED BY OTHERS.

***** MUST PURGE WATER HEATER FOR A MINIMUM OF 5 MINUTES AT A MINIMUM OF 15 GPM. OPEN AND CLOSE DRAIN VALVE 3 TIMES WHILE PURGING TO REMOVE ANY AIR POCKETS. *****

Eemax™

400 captain Neville drive
Waterbury, ct. 06075
1-800-543-6163
support@eemaxinc.com

PARALLEL HEATERS WITH CIRCULATORS WITH STORAGE TANKS

DRAWING IS A RECOMMENDATION ONLY.
THIS IS NOT AN ENGINEERING DRAWING; IT IS INTENDED ONLY AS A GUIDE AND NOT AS A REPLACEMENT FOR PROFESSIONAL ENGINEERING PROJECT DRAWINGS. THIS DRAWING IS NOT INTENDED TO DESCRIBE A COMPLETE SYSTEM. IT IS UP TO THE CONTRACTOR OR ENGINEER TO DETERMINE THE NECESSARY COMPONENTS AND CONFIGURATION OF THE PARTICULAR SYSTEM TO BE INSTALLED. THE DRAWING DOES NOT IMPLY COMPLIANCE WITH LOCAL BUILDING CODE REQUIREMENTS. IT IS THE RESPONSIBILITY OF THE ENGINEER OR CONTRACTOR TO ENSURE THAT THE INSTALLATION IS IN ACCORDANCE WITH ALL LOCAL BUILDING CODES. CONFER WITH LOCAL BUILDING OFFICIALS BEFORE INSTALLATION.

PARALLEL HEATER WITH CIRCULATORS WITH DIP TUBE STORAGE TANK

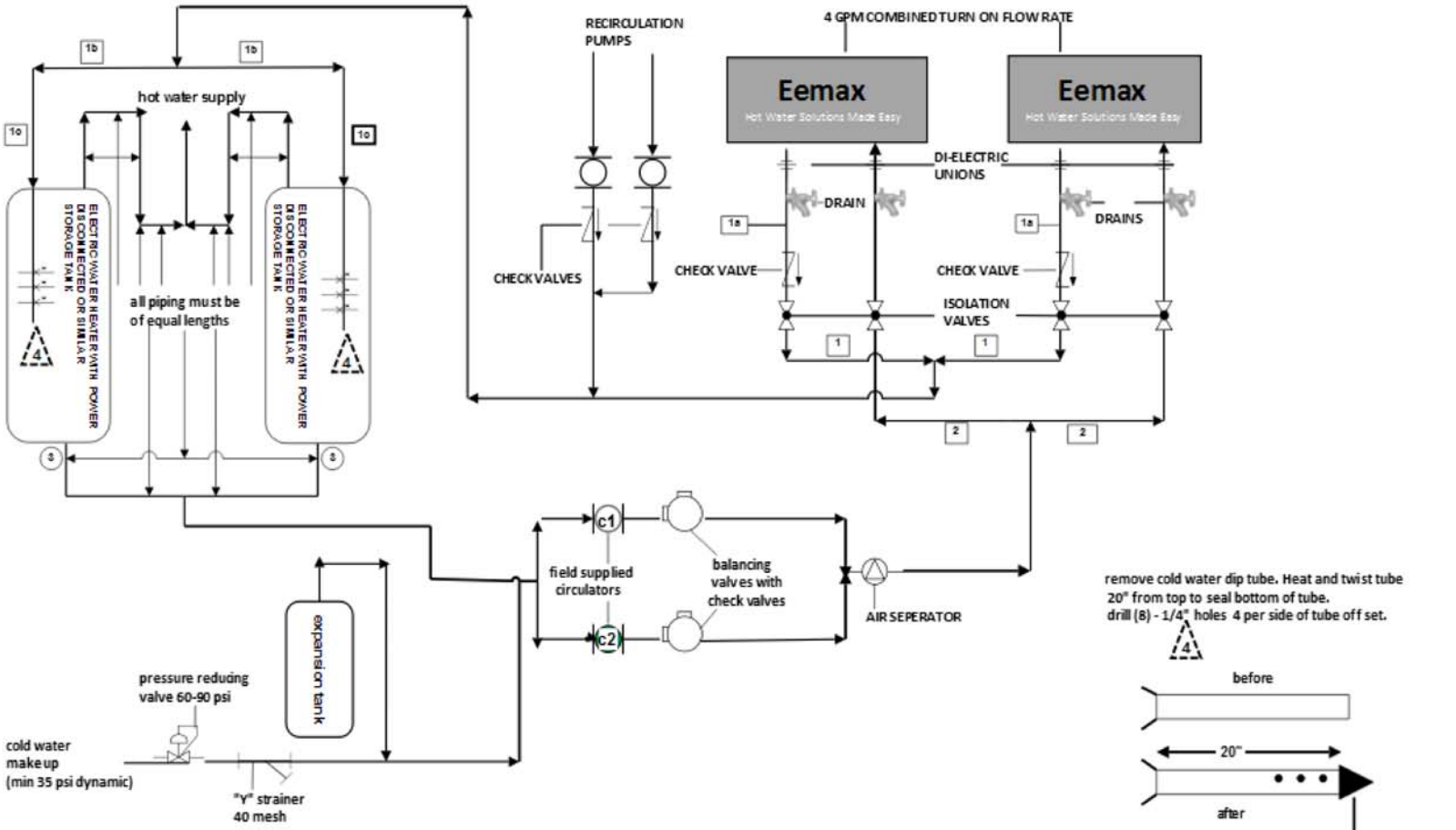

remove cold water dip tube. Heat and twist tube 20" from top to seal bottom of tube.
drill (8) - 1/4" holes 4 per side of tube off set.

NOTES:

1 1a	PIPING MUST BE OF EQUAL LENGTHS
2	PIPING MUST BE OF EQUAL LENGTHS
3	REMOVE BOILER DRAIN AT BASE OF TANK.

*****MUST PURGE WATER HEATER FOR A MINIMUM OF 5 MINUTES AT A MINIMUM OF 15 GPM. OPEN AND CLOSE DRAIN VALVE WHILE PURGING TO REMOVE ANY AIR POCKETS. *****

Eemax™

400 captain Neville drive
Waterbury, ct. 06075
1-800-543-6163
support@eemaxinc.com

PARALLEL HEATER WITH CIRCULATORS WITH DIP TUBE STORAGE TANK

DRAWING IS A RECOMMENDATION ONLY.
THIS IS NOT AN ENGINEERING DRAWING; IT IS INTENDED ONLY AS A GUIDE AND NOT AS A REPLACEMENT FOR PROFESSIONAL ENGINEERING PROJECT DRAWINGS. THIS DRAWING IS NOT INTENDED TO DESCRIBE A COMPLETE SYSTEM. IT IS UP TO THE CONTRACTOR OR ENGINEER TO DETERMINE THE NECESSARY COMPONENTS AND CONFIGURATION OF THE PARTICULAR SYSTEM TO BE INSTALLED. THE DRAWING DOES NOT IMPLY COMPLIANCE WITH LOCAL BUILDING CODE REQUIREMENTS. IT IS THE RESPONSIBILITY OF THE ENGINEER OR CONTRACTOR TO ENSURE THAT THE INSTALLATION IS IN ACCORDANCE WITH ALL LOCAL BUILDING CODES. CONFER WITH LOCAL BUILDING OFFICIALS BEFORE INSTALLATION.

PARALLEL APPLICATION IN LOOP CONFIGURATION

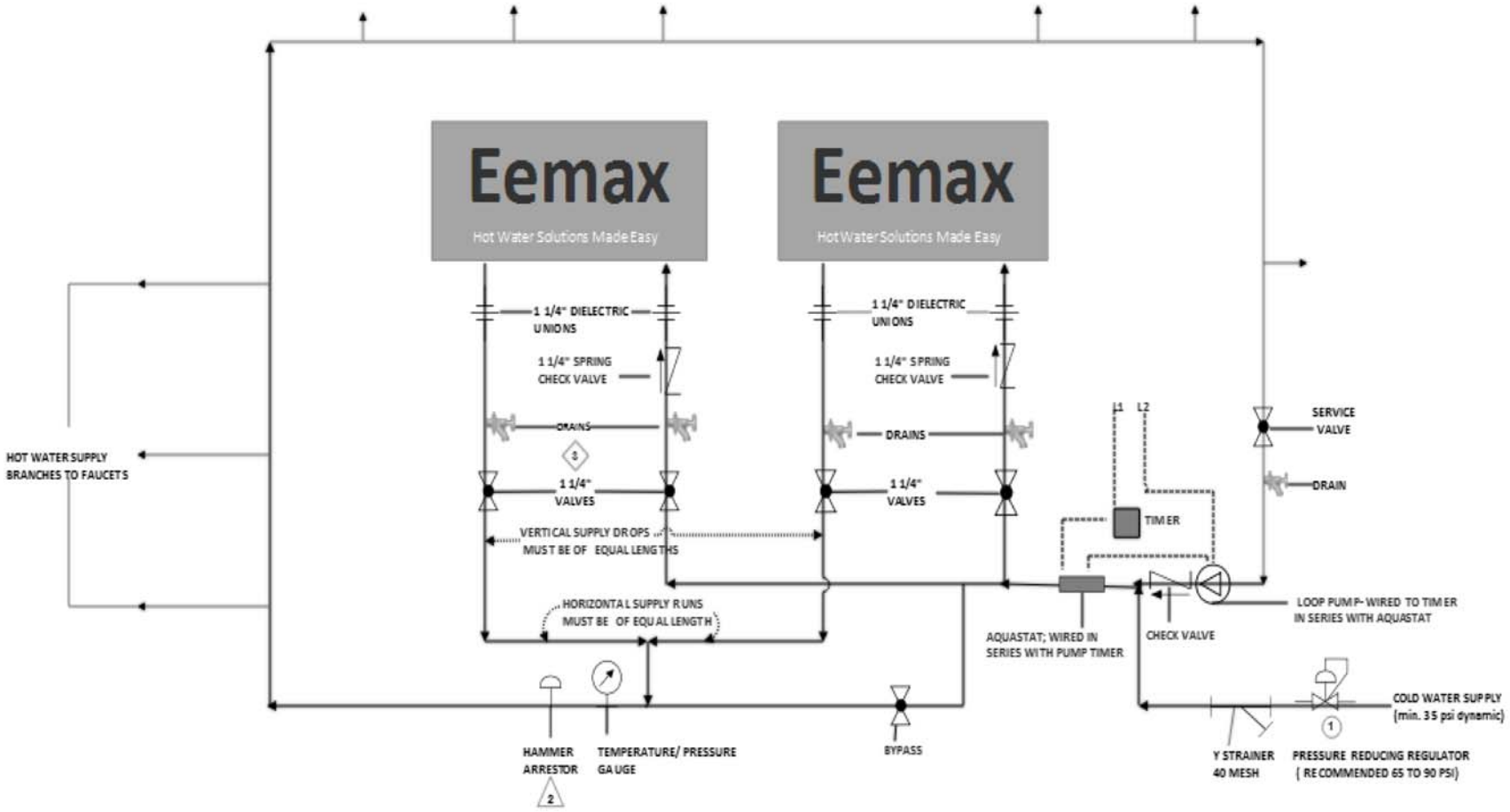

NOTES:

1. CHECK LOCAL CODES
2. WATER HAMMER ARRESTOR MUST BE INSTALLED CHECK MANUFACTURERS INSTALLATION INSTRUCTIONS FOR PROPER LOCATION AND SIZING
3. SLOW ACTING VALVES RECOMMENDED TO PREVENT POSSIBLE DAMAGE DUE TO WATER HAMMER

RELIEF VALVE NOT REQUIRED ON AP HEATERS- REFER TO STATE AND LOCAL CODES

CHECK VALVE MUST BE INSTALLED IN OUTLET PORT IF HEATERS TO BE LOCATED ABOVE FIXTURES

HEATERS INSTALLED WITH AN ADJUSTABLE TIME DELAY ONCE PUMP IS ENGAGED BEFORE HEATER ELEMENTS ARE ENERGIZED

*****MUST PURGE WATER HEATER FOR A MINIMUM OF 5 MINUTES AT A MINIMUM OF 15GPM. OPEN AND CLOSE DRAIN VALVE 3 TIMES WHILE PURGING TO REMOVE ANY AIR POCKETS. *****

Eemax™

400 CAPTAIN NEVILLE DR.
WATER BURY, CT. 06075
1-800-543-6163
support@Eemaxinc.com

PARALLEL APPLICATION IN LOOP CONFIGURATION

DRAWING IS A RECOMMENDATION ONLY.
THIS IS NOT AN ENGINEERING DRAWING; IT IS INTENDED ONLY AS A GUIDE AND NOT AS A REPLACEMENT FOR PROFESSIONAL ENGINEERING PROJECT DRAWINGS. THIS DRAWING IS NOT INTENDED TO DESCRIBE A COMPLETE SYSTEM. IT IS UP TO THE CONTRACTOR OR ENGINEER TO DETERMINE THE NECESSARY COMPONENTS AND CONFIGURATION OF THE PARTICULAR SYSTEM TO BE INSTALLED. THE DRAWING DOES NOT IMPLY COMPLIANCE WITH LOCAL BUILDING CODE REQUIREMENTS. IT IS THE RESPONSIBILITY OF THE ENGINEER OR CONTRACTOR TO ENSURE THAT THE INSTALLATION IS IN ACCORDANCE WIT ALL LOCAL BUILDING CODES. CONFER WITH LOCAL BUILDING OFFICIALS BEFORE INSTALLATION.

PRIMARY/SECONDARY PIPING INSTALLATION

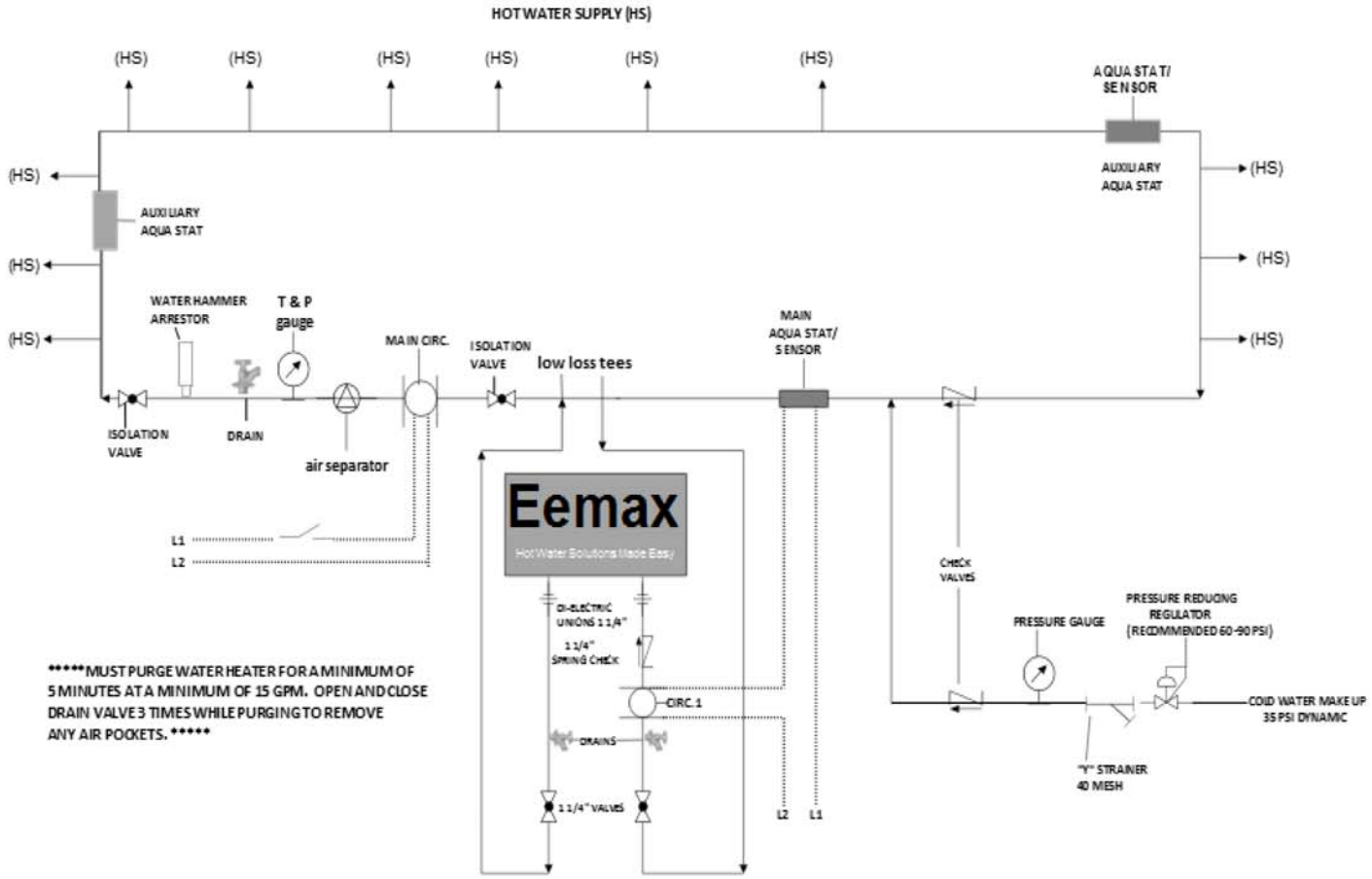

*****MUST PURGE WATER HEATER FOR A MINIMUM OF 5 MINUTES AT A MINIMUM OF 15 GPM. OPEN AND CLOSE DRAIN VALVE 3 TIMES WHILE PURGING TO REMOVE ANY AIR POCKETS. *****

notes

circulator controls supplied by others

it is recommended that main circulator and aquastat(s) be connected in series with a timer to shut down during off periods.

Depending on loop size and length, multiple aquastats connected in parallel may be necessary

Eemax™

400 Captain Neville Drive
Waterbury, CT. 06705
1-800-543-6163
Support@eemaxinc.com

PRIMARY/ SECONDARY PIPING INSTALLATION

DRAWING IS ONLY A RECOMMENDATION

THIS IS NOT AN ENGINEERING DRAWING; IT IS INTENDED ONLY AS A GUIDE AND NOT AS A REPLACEMENT FOR PROFESSIONAL ENGINEERING PROJECT DRAWINGS. THIS DRAWING IS NOT INTENDED TO DESCRIBE A COMPLETE SYSTEM. IT IS UP TO THE CONTRACTOR OR ENGINEER TO DETERMINE THE NECESSARY COMPONENTS AND CONFIGURATION OF THE PARTICULAR SYSTEM TO BE INSTALLED. THE DRAWING DOES NOT IMPLY COMPLIANCE WITH LOCAL BUILDING CODE REQUIREMENTS. IT IS THE RESPONSIBILITY OF THE ENGINEER OR CONTRACTOR TO ENSURE THAT THE INSTALLATION IS IN ACCORDANCE WITH ALL LOCAL BUILDING CODES. CONFER WITH LOCAL BUILDING OFFICIALS BEFORE INSTALLATION

MULTIPLE HEATERS IN PRIMARY/SECONDARY PIPING INSTALLATION

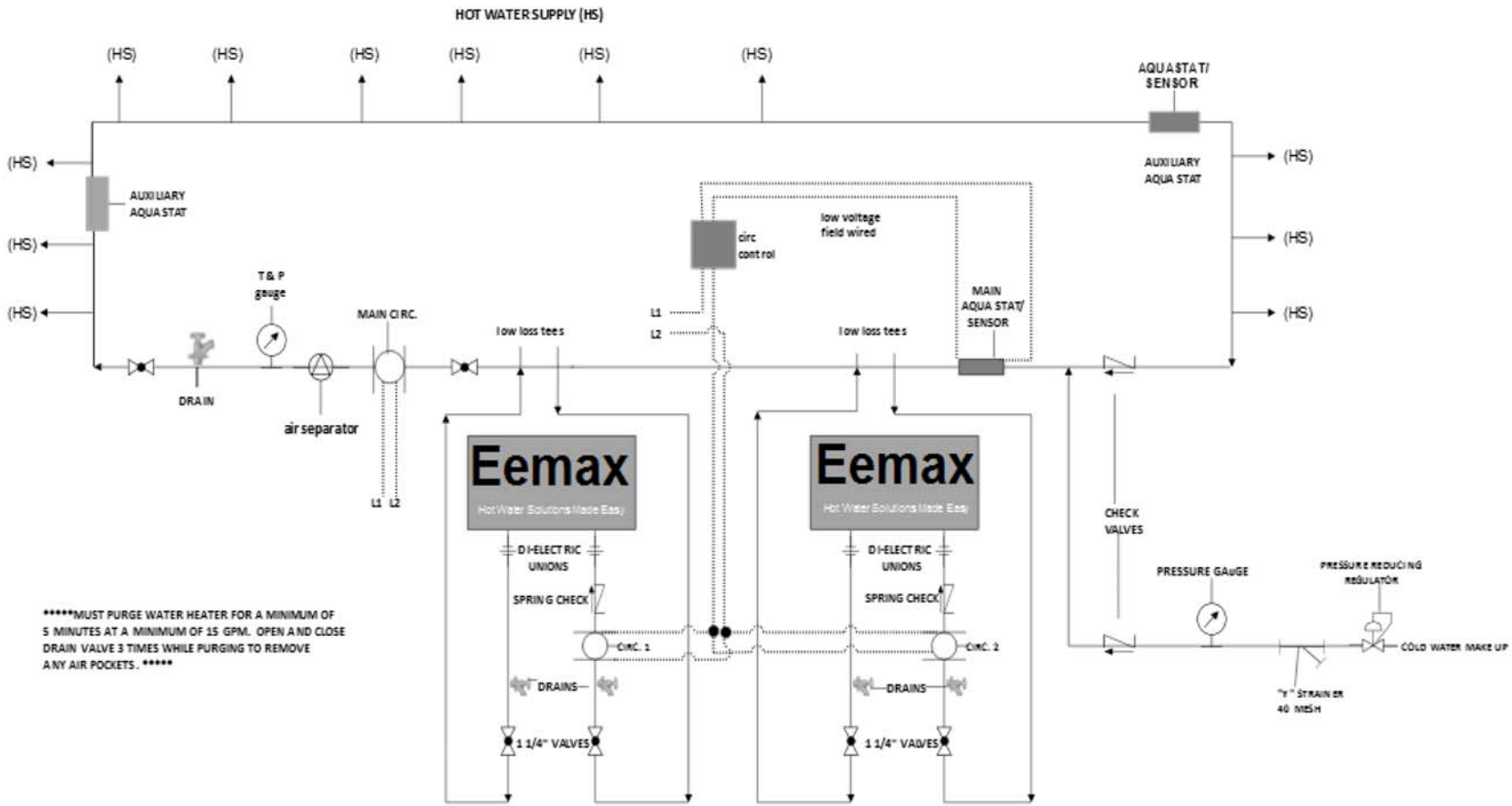

*****MUST PURGE WATER HEATER FOR A MINIMUM OF 5 MINUTES AT A MINIMUM OF 15 GPM. OPEN AND CLOSE DRAIN VALVE 3 TIMES WHILE PURGING TO REMOVE ANY AIR POCKETS. *****

notes

circulator controls supplied by others

It is recommended that main circulator and aquastat(s) be connected in series with a timer to shut down during off periods.

Depending on loop size and length, multiple aquastats connected in parallel may be necessary

Eemax™

400 Captain Neville Drive
Waterbury, CT. 06705
1-800-543-6163
Support@eemaxinc.com

PRIMARY/ SECONDARY PIPING INSTALLATION

DRAWING IS ONLY A RECOMMENDATION

THIS IS NOT AN ENGINEERING DRAWING; IT IS INTENDED ONLY AS A GUIDE AND NOT AS A REPLACEMENT FOR PROFESSIONAL ENGINEERING PROJECT DRAWINGS. THIS DRAWING IS NOT INTENDED TO DESCRIBE A COMPLETE SYSTEM. IT IS UP TO THE CONTRACTOR OR ENGINEER TO DETERMINE THE NECESSARY COMPONENTS AND CONFIGURATION OF THE PARTICULAR SYSTEM TO BE INSTALLED. THE DRAWING DOES NOT IMPLY COMPLIANCE WITH LOCAL BUILDING CODE REQUIREMENTS. IT IS THE RESPONSIBILITY OF THE ENGINEER OR CONTRACTOR TO ENSURE THAT THE INSTALLATION IS IN ACCORDANCE WITH ALL LOCAL BUILDING CODES. CONFER WITH LOCAL BUILDING OFFICIALS BEFORE INSTALLATION

RECIRCULATION LOOP WITH LOW LOSS HEADER TEES

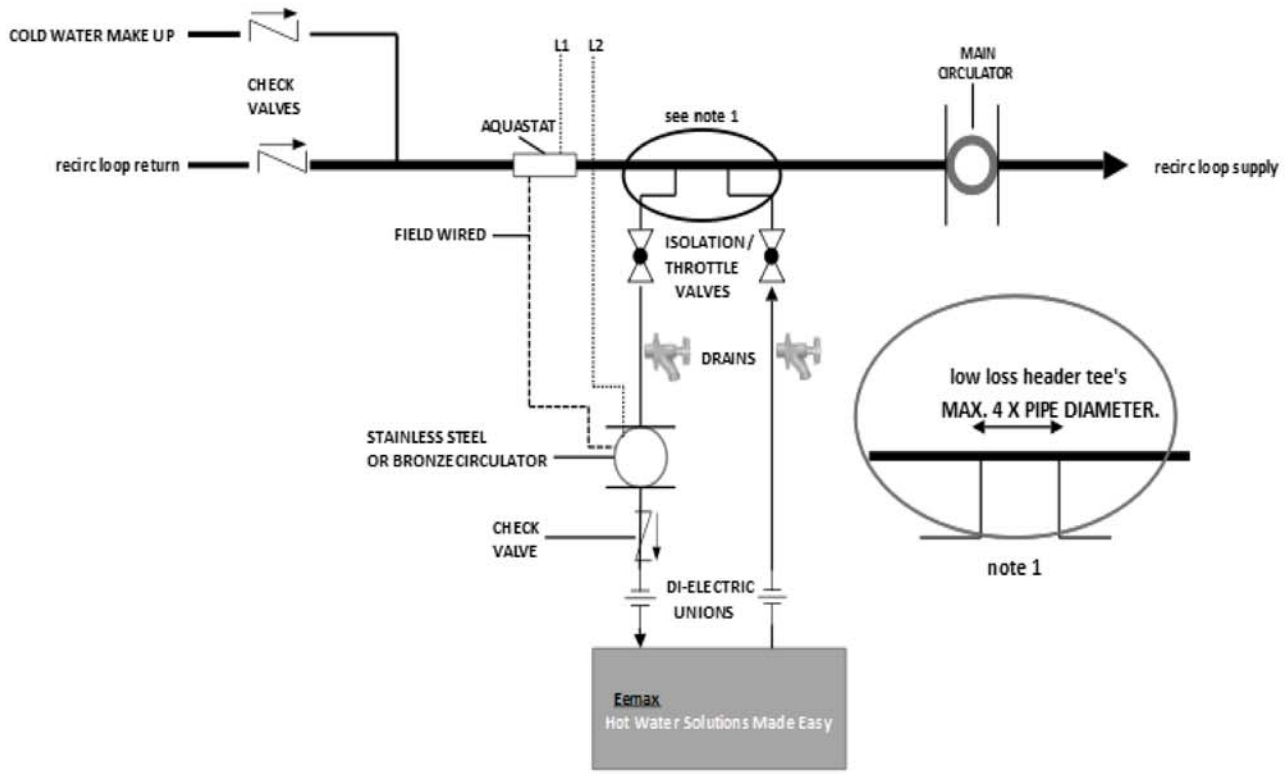

notes:

On initial start up, must purge water heater for at least 5 minutes. Open and close drain valve multiple times to get any lodged air out. Run 006 circulator for 5 minutes before applying power to heater.

Aquastat gets field wired into circulator. set aquastat for desired water temp.

Use throttle valve to maintain proper delta "T" between inlet and outlet of water heater

Eemax

400 CAPTAIN NEVILLE DRIVE
WATERBURY, CT. 06075
1-800-543-6163
SUPPORT@EEMAXINC.COM

RECIRCULATION LOOP WITH LOW LOSS HEADER TEES

DRAWING IS A RECOMMENDATION ONLY
THIS IS NOT AN ENGINEERING DRAWING; IT IS INTENDED ONLY AS A GUIDE AND NOT AS A REPLACEMENT FOR PROFESSIONAL ENGINEERING PROJECT DRAWINGS.
THIS DRAWING IS NOT INTENDED TO DESCRIBE A COMPLETE SYSTEM. IT IS UP TO THE CONTRACTOR OR ENGINEER TO DETERMINE THE NECESSARY COMPONENTS AND CONFIGURATION OF THE PARTICULAR SYSTEM TO BE INSTALLED.
THE DRAWINGS DOES NOT IMPLY COMPLIANCE WITH LOCAL BUILDING CODE REQUIREMENTS
IT IS THE RESPONSIBILITY OF THE ENGINEER OR CONTRACTOR TO ENSURE THAT THE INSTALLATION IS IN ACCORDANCE WITH ALL LOCAL BUILDING CODES.
CONFER WITH LOCAL BUILDING OFFICIALS BEFORE INSTALLATION.

STORAGE TANKS WITH HIGH FLOW DEMAND CIRCULATORS/LOW FLOW DEMAND HEATER

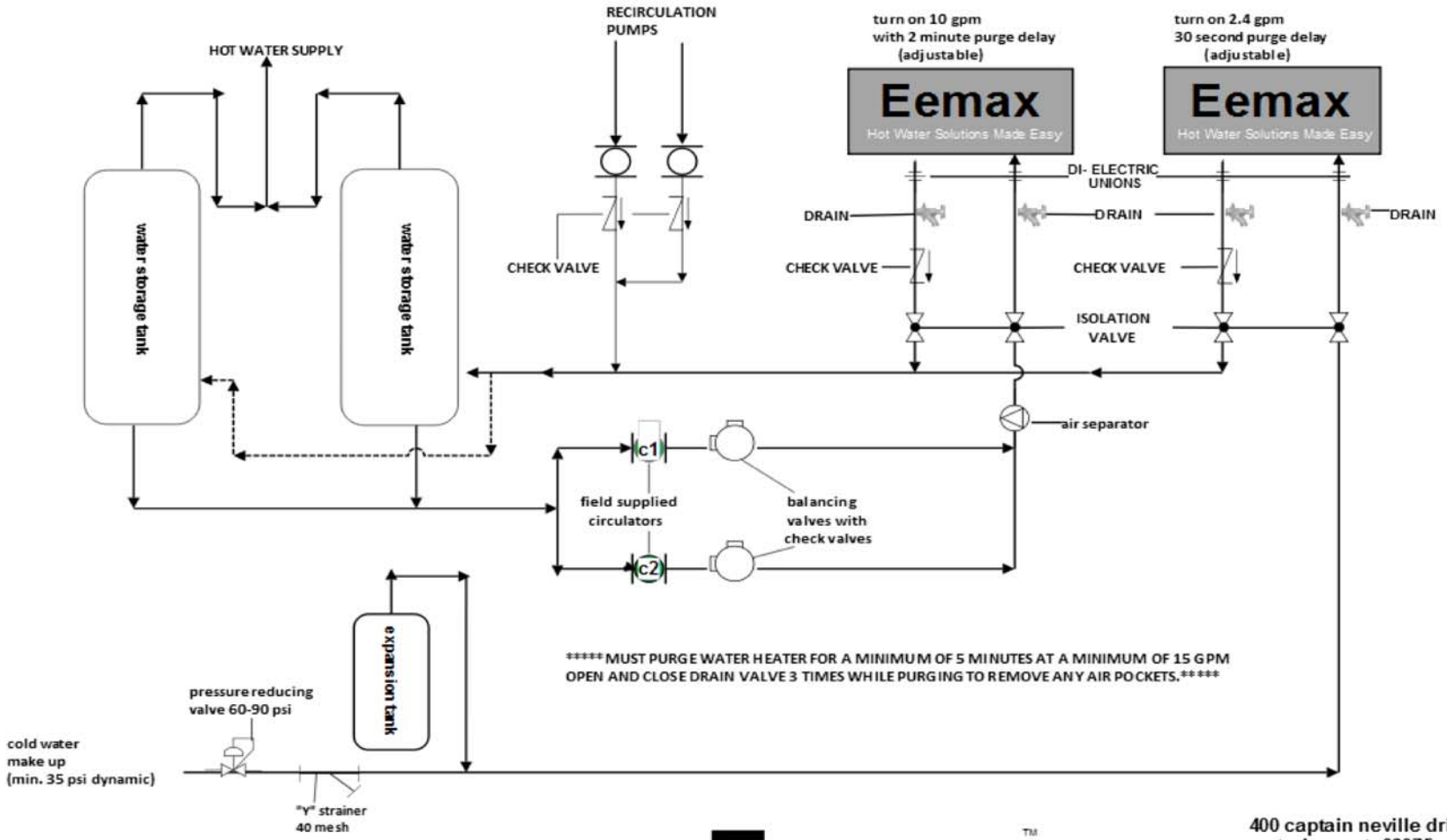

NOTES:

HEATER 1 ONLY COMES ON WHEN PUMPS ACTIVATE TO REPLENISH TANKS UNDER HIGH DEMAND. PUMP SIZE AND BALANCING VALVE SIZES DETERMINED BY OTHERS

HEATER 2 IS MAIN HEATER. ALL COLD WATER MAKE UP AND FLOW GOES THROUGH HEATERS TO MAINTAIN SET HOT WATER ON ANY DEMAND CALL
option 1, C1 & C2 connected to individual tank aquastats. come on on temperature decrease.
option 2, C1 & C2 connected to control panel monitoring tank temperatures, pump 1 engages till demand is to large then pump 2 will engage.

Eemax™

400 captain neville drive
waterbury, ct. 06075
1-800-543-6163
support@eemaxinc.com

STORAGE TANKS WITH HIGH FLOW DEMAND CIRCULATORS/ LOW FLOW DEMAND HEATER

DRAWING IS A RECOMMENDATION ONLY
THIS IS NOT AN ENGINEERING DRAWING; IT IS INTENDED ONLY AS A GUIDE AND NOT AS A REPLACEMENT FOR PROFESSIONAL ENGINEERING PROJECT DRAWINGS.
THIS DRAWING IS NOT INTENDED TO DESCRIBE A COMPLETE SYSTEM. IT IS UP TO THE CONTRACTOR OR ENGINEER TO DETERMINE THE NECESSARY COMPONENTS AND CONFIGURATION OF THE PARTICULAR SYSTEM TO BE INSTALLED.
THE DRAWING DOES NOT IMPLY COMPLIANCE WITH LOCAL BUILDING CODE REQUIREMENTS
IT IS THE RESPONSIBILITY OF THE ENGINEER OR CONTRACTOR TO ENSURE THAT THE INSTALLATION IS IN ACCORDANCE WITH ALL LOCAL BUILDING CODES.
CONFER WITH LOCAL BUILDING OFFICIALS BEFORE INSTALLATION.

HOT WATER WITH SPACE HEATING

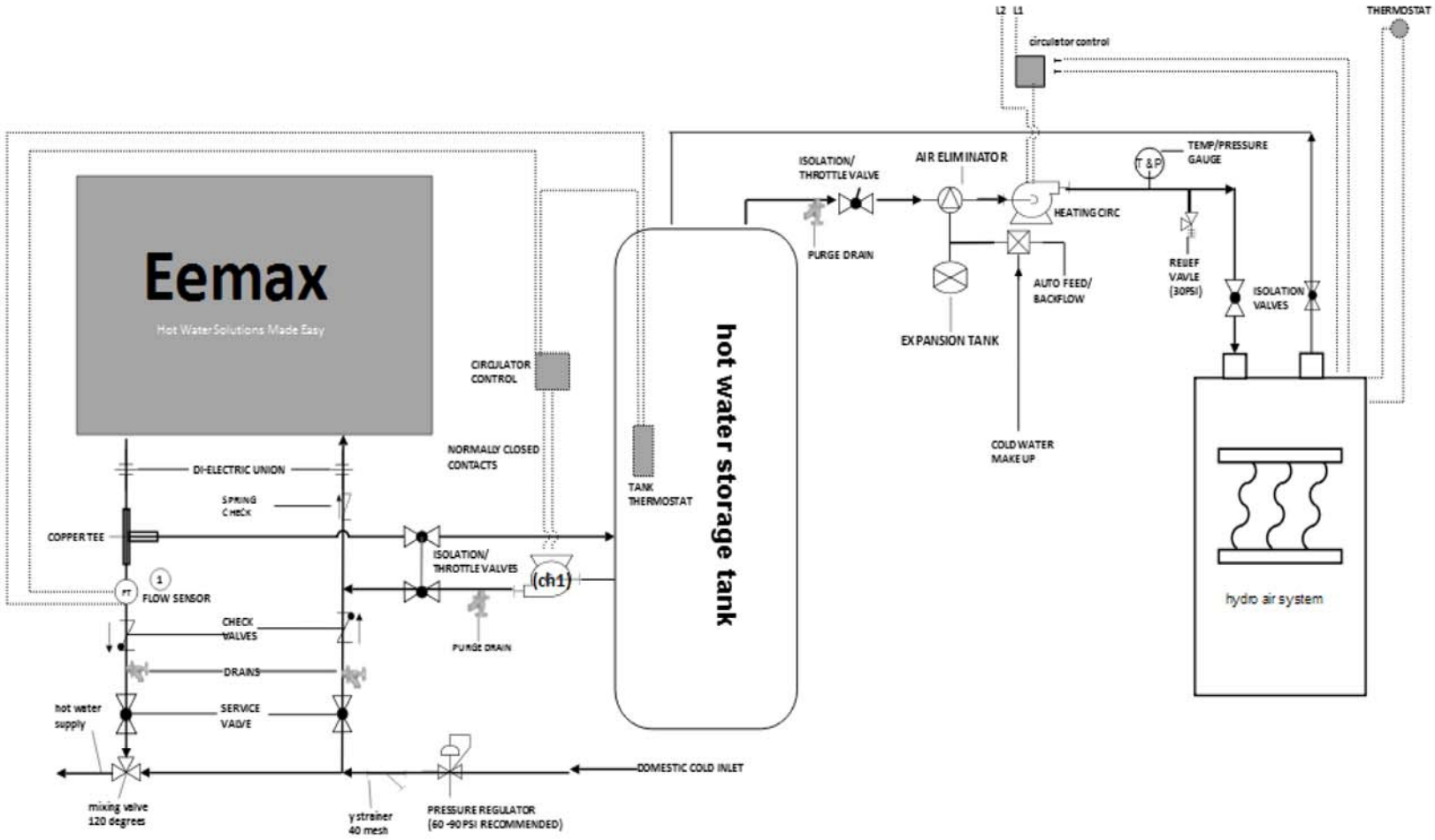

*****MUST PURGE WATER HEATER FOR A MINIMUM OF 5 MINUTES AT A MINIMUM OF 15 GPM. OPEN AND CLOSE DRAIN VALVE WHILE PURGING TO REMOVE ANY AIR POCKETS. *****

NOTES;

(1) FLOW SENSOR IN SERIES WITH TANK THERMOSTAT AND CIRCULATOR CONTROL (CH1) ONCE FLOW IS DETECTED CIRCUIT OPENS TO PRIORITIZE HOT WATER

WATER HAMMER ARRESTOR MUST BE INSTALLED IF FAST ACTING VALVES ARE BEING USED

Eemax™

400 CAPTAIN NEVEILLE DRIVE
WATERBURY, CT. 06075
1-800-543-6163
support@eemaxinc.com

HOT WATER WITH SPACE HEATING

DRAWING IS A RECOMMENDATION ONLY

THIS IS NOT AN ENGINEERING DRAWING; IT IS INTENDED ONLY AS A GUIDE AND NOT AS A REPLACEMENT FOR PROFESSIONAL ENGINEERING PROJECT DRAWINGS. THIS DRAWING IS NOT INTENDED TO DESCRIBE A COMPLETE SYSTEM. IT IS UP TO THE CONTRACTOR OR ENGINEER TO DETERMINE THE NECESSARY COMPONENTS AND CONFIGURATION OF THE PARTICULAR SYSTEM TO BE INSTALLED. THE DRAWING DOES NOT IMPLY COMPLIANCE WITH LOCAL BUILDING CODE REQUIREMENTS. IT IS THE RESPONSIBILITY OF THE ENGINEER OR CONTRACTOR TO ENSURE THAT THE INSTALLATION IS IN ACCORDANCE WITH ALL LOCAL BUILDING CODES. CONFER WITH LOCAL BUILDING OFFICIALS BEFORE INSTALLATION.

HOT WATER / SPACE HEATING

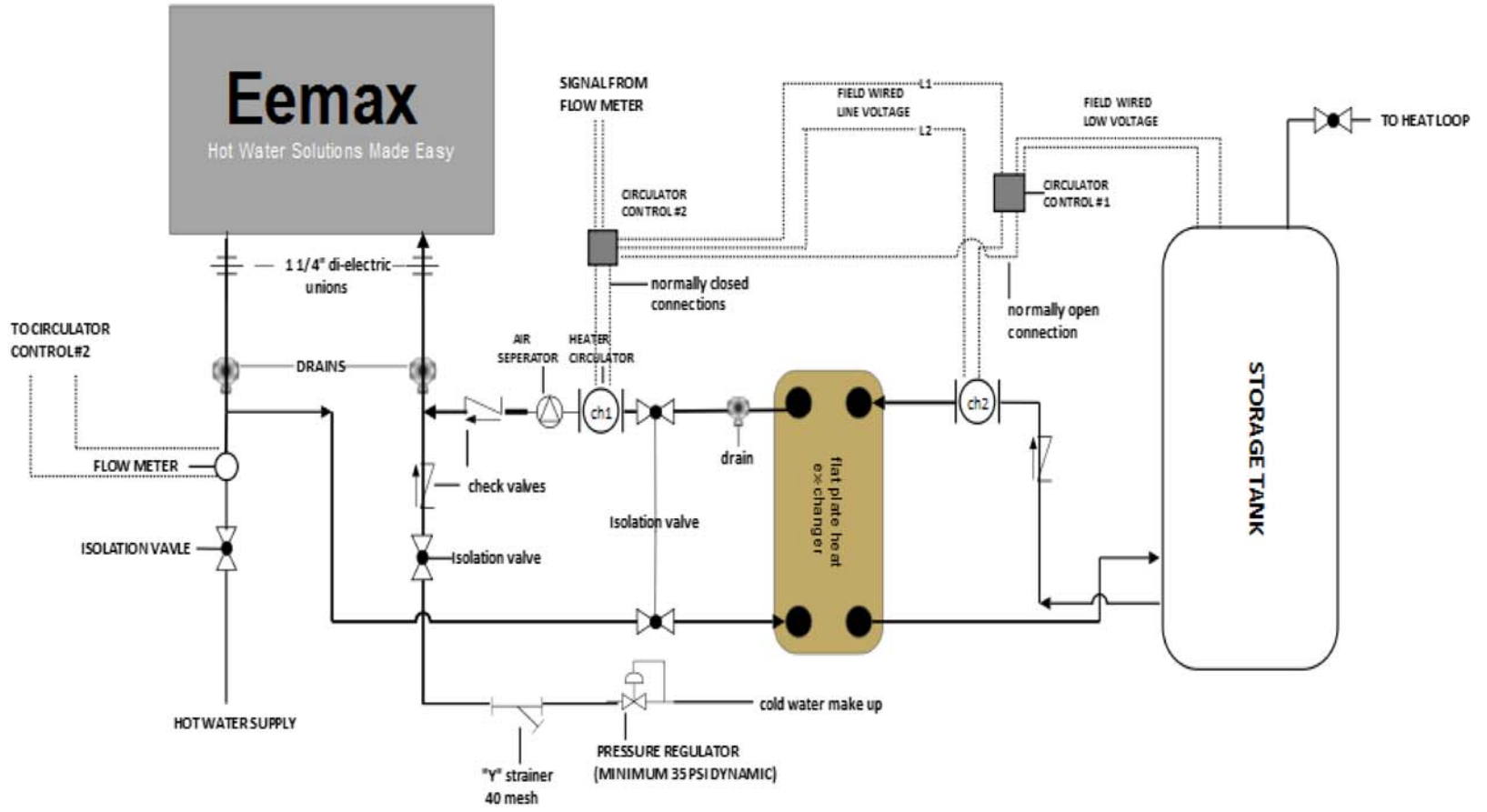

notes:

AQUASTAT ON STORAGE TANK ENGAGES CIRCULATOR CONTROL#1.
CH2 IS CONNECTED TO NORMALLY OPEN CONTACTS ON CONTROL#1

POWER IS SENT FROM CONTROL#1 TO THE COMMON TERMINAL ON CIRCULATOR CONTROL #2. CH1 IS CONNECTED TO THE NORMALLY CLOSED TERMINAL. WHEN FLOW METER DETECTS FLOW, IT SENDS A SIGNAL TO ENGAGE CONTROL#2 WHICH OPENS CH1 CIRCUIT.

Eemax™

400 CAPTAIN NEVILLE DR.
WATERBURY, CT. 06075
1-800-543-6163
SUPPORT@Eemaxinc.com

HOT WATER / SPACE HEATING

DRAWING SCHEMATIC IS A RECOMMENDATION ONLY.
THIS IS NOT AN ENGINEERING DRAWING; IT IS INTENDED ONLY AS A GUIDE AND NOT AS A REPLACEMENT FOR PROFESSIONAL ENGINEERING PROJECT DRAWINGS. THIS DRAWING IS NOT INTENDED TO DESCRIBE A COMPLETE SYSTEM. IT IS UP TO THE CONTRACTOR OR ENGINEER TO DETERMINE THE NECESSARY COMPONENTS AND CONFIGURATION OF THE PARTICULAR SYSTEM TO BE INSTALLED. THE DRAWING DOES NOT IMPLY COMPLIANCE WITH LOCAL BUILDING CODE REQUIREMENTS. IT IS THE RESPONSIBILITY OF THE ENGINEER OR CONTRACTOR TO ENSURE THAT THE INSTALLATION IS IN ACCORDANCE WITH ALL LOCAL BUILDING CODES. CONFER WITH LOCAL BUILDING OFFICIALS BEFORE INSTALLATION.

REPAIRS AND OPTIONS

Repair Parts

> **⚠ WARNING**
>
> Service and repairs are to be performed by licensed electricians or qualified servicemen.

> **⚠ WARNING**
>
> Before attempting any repairs to the heater, make sure that the electrical breaker is "off" and confirm that there is no voltage at the heater.

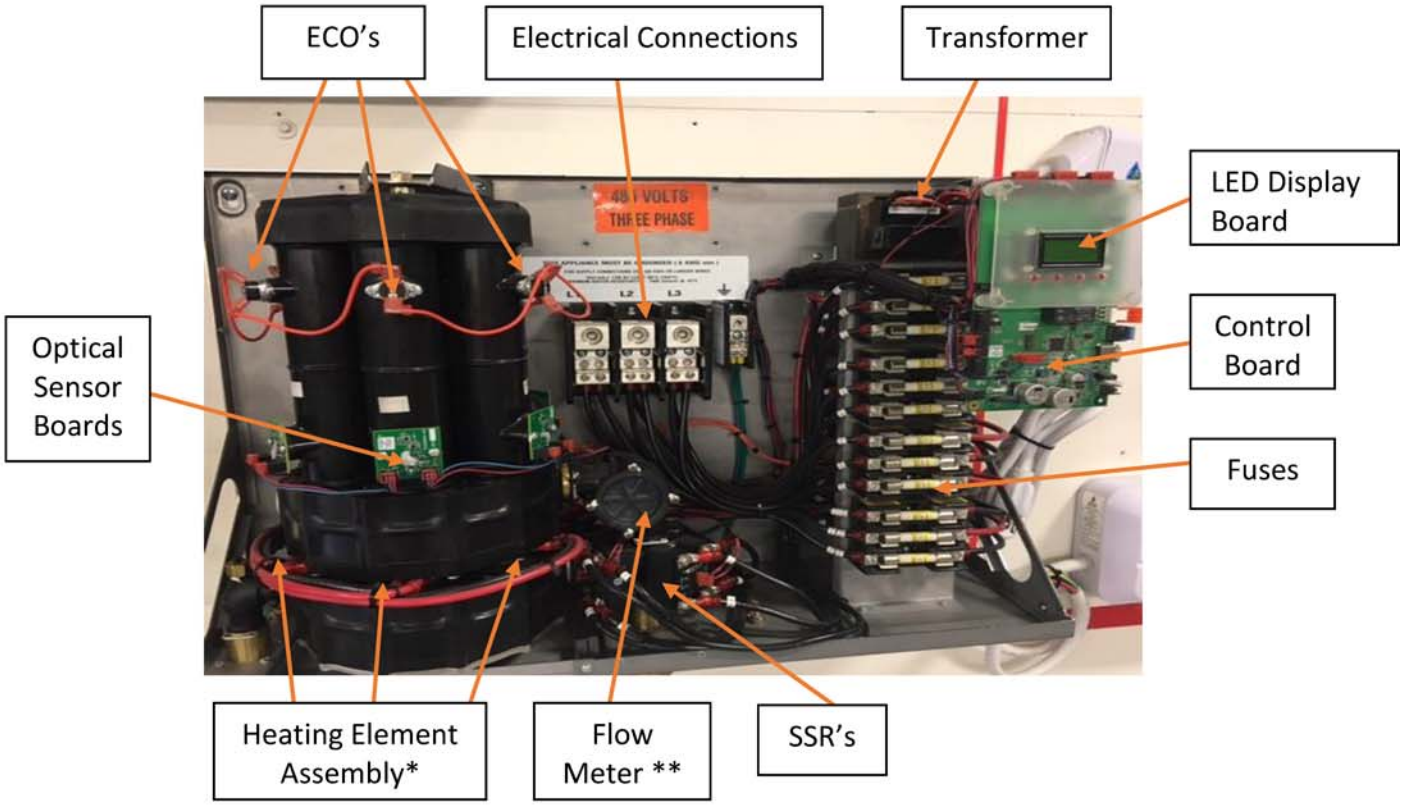

* HEATING ELEMENT ASSEMBLY CONSISTS OF ONE HEATER CORE AND WIRE ELEMENT(S)

** FLOW METER KIT CONSISTS OF PADDLE WHEEL, DOWEL PIN, O RING AND 4 MOUNTING SCREWS.

Repair Parts (continued)

	Model Number	Model Number Suffix	Element Number Assembly	Flow Meter Assembly (inc board)	Master Display Board	Transformer	Fuses	Triacs Assembly replaced by SSR SSR Assemble (incl. 3)	ECO Assembly	Optical Board Assembly
208V	AP032208		EX77000-8.12 B02	EX78000-00	EX08300-00	EX08303-07	EX198	EX78009-00	EX278A-Kit	EX78001-00
	AP032208	EE	EX77000-8.12 A04	EX78000-00	EX08300-00	EX08303-07	EX198	EX78009-00	EX278E-Kit	EX78001-00
	AP032208	S	EX77000-8.12 B00	EX78000-00	EX08300-00	EX08303-07	EX198	EX78009-00	EX278D-Kit	EX78001-00
	AP036208		EX77000-7.20 B02	EX78000-00	EX08300-00	EX08303-07	EX08200-11	EX78009-00	EX278A-Kit	EX78001-00
	AP036208	EE	EX77000-7.20 A04	EX78000-00	EX08300-00	EX08303-07	EX08200-11	EX78009-00	EX278E-Kit	EX78001-00
	AP036208	S	EX77000-7.20 B00	EX78000-00	EX08300-00	EX08303-07	EX08200-11	EX78009-00	EX278D-Kit	EX78001-00
	AP041208		EX77000-6.33 B02	EX78000-00	EX08300-00	EX08303-07	EX08200-11	EX78009-00	EX278A-Kit	EX78001-00
	AP041208	EFD	EX77000-6.33 A04	EX78000-01	EX08300-00	EX08303-07	EX08200-11	EX78009-00	EX278E-Kit	EX78001-00
	AP041208	S	EX77000-6.33 B00	EX78000-00	EX08300-00	EX08303-07	EX08200-11	EX78009-00	EX278D-Kit	EX78001-00
	AP054208		EX77000-4.81 B02	EX78000-00	EX08300-00	EX08303-07	EX198	EX78009-00	EX278A-Kit	EX78001-00
	AP054208	EFD	EX77000-4.81 A04	EX78000-01	EX08300-00	EX08303-07	EX198	EX78009-00	EX278E-Kit	EX78001-00
	AP054208	S	EX77000-4.81 B00	EX78000-00	EX08300-00	EX08303-07	EX198	EX78009-00	EX278D-Kit	EX78001-00
	AP064208		EX77000-4.06 B04	EX78000-01	EX08300-00	EX08303-07	EX08200-11	EX78009-00	EX278A-Kit	EX78001-00
	AP064208	EFD	EX77000-4.06 A04	EX78000-01	EX08300-00	EX08303-07	EX08200-11	EX78009-00	EX278E-Kit	EX78001-00
	AP064208	S	EX77000-4.06 B00	EX78000-01	EX08300-00	EX08303-07	EX08200-11	EX78009-00	EX278D-Kit	EX78001-00
480	AP036480		EX77000-19.2 B02	EX78000-00	EX08300-00	EX08303-05	N/A	EX78009-00	EX278A-Kit	EX78001-00
	AP036480	EE	EX77000-19.2 A04	EX78000-01	EX08300-00	EX08303-05	N/A	EX78009-00	EX278E-Kit	EX78001-00
	AP036480	S	EX77000-19.2 B00	EX78000-00	EX08300-00	EX08303-05	N/A	EX78009-00	EX278D-Kit	EX78001-00
	AP039480		EX77000-17.7 B02	EX78000-00	EX08300-00	EX08303-05	N/A	EX78009-00	EX278A-Kit	EX78001-00
	AP039480	EE	EX77000-17.7 A04	EX78000-01	EX08300-00	EX08303-05	N/A	EX78009-00	EX278E-Kit	EX78001-00
	AP039480	S	EX77000-17.7 B00	EX78000-00	EX08300-00	EX08303-05	N/A	EX78009-00	EX278D-Kit	EX78001-00
	AP048480		EX77000-14.4 B02	EX78000-00	EX08300-00	EX08303-05	N/A	EX78009-00	EX278A-Kit	EX78001-00
	AP048480	EFD	EX77000-14.4 A04	EX78000-01	EX08300-00	EX08303-05	N/A	EX78009-00	EX278E-Kit	EX78001-00
	AP048480	S	EX77000-14.4 B00	EX78000-00	EX08300-00	EX08303-05	N/A	EX78009-00	EX278D-Kit	EX78001-00
	AP054480		EX77000-12.8 B04	EX78000-00	EX08300-00	EX08303-08	EX08100-07	EX78009-00	EX278A-Kit	EX78001-00

	AP054480	EFD	EX77000-12.8 A04	EX78000-01	EX08300-00	EX08303-08	EX08100-07	EX78009-00	EX278E-Kit	EX78001-00
	AP054480	S	EX77000-12.8 B00	EX78000-00	EX08300-00	EX08303-08	EX08100-07	EX78009-00	EX278D-Kit	EX78001-00
	AP063480		EX77000-18.2 B04	EX78000-01	EX08300-00	EX08303-08	EX198	EX78009-00	EX278A-Kit	EX78001-00
	AP063480	EFD	EX77000-18.2 A04	EX78000-01	EX08300-00	EX08303-08	EX198	EX78009-00	EX278E-Kit	EX78001-00
	AP063480	S	EX77000-18.2 B00	EX78000-01	EX08300-00	EX08303-08	EX198	EX78009-00	EX278D-Kit	EX78001-00
	AP072480		EX77000-19.2 B04	EX78000-01	EX08300-00	EX08303-08	EX198	EX78009-00	EX278A-Kit	EX78001-00
	AP072480	EFD	EX77000-19.2 A04	EX78000-01	EX08300-00	EX08303-08	EX198	EX78009-00	EX278E-Kit	EX78001-00
	AP072480	S	EX77000-19.2 B00	EX78000-01	EX08300-00	EX08303-08	EX198	EX78009-00	EX278D-Kit	EX78001-00
	AP096480		EX77000-14.4 B04	EX78000-01	EX08300-00	EX08303-08	EX198	EX78009-00	EX278A-Kit	EX78001-00
	AP096480	EFD	EX77000-14.4 A04	EX78000-01	EX08300-00	EX08303-08	EX198	EX78009-00	EX278E-Kit	EX78001-00
	AP096480	S	EX77000-14.4 B00	EX78000-01	EX08300-00	EX08303-08	EX198	EX78009-00	EX278D-Kit	EX78001-00
	AP108480		EX77000-12.8 B04	EX78000-01	EX08300-00	EX08303-08	EX198	EX78009-00	EX278A-Kit	EX78001-00
	AP108480	EFD	EX77000-12.8 A04	EX78000-01	EX08300-00	EX08303-08	EX198	EX78009-00	EX278E-Kit	EX78001-00
	AP108480	S	EX77000-12.8 B00	EX78000-01	EX08300-00	EX08303-08	EX198	EX78009-00	EX278D-Kit	EX78001-00
	AP126480		EX77000-10.97 B04	EX78000-01	EX08300-00	EX08303-08	EX08200-11	EX78009-00	EX278A-Kit	EX78001-00
	AP126480	EFD	EX77000-10.97 A04	EX78000-01	EX08300-00	EX08303-08	EX08200-11	EX78009-00	EX278E-Kit	EX78001-00
	AP126480	S	EX77000-10.97 B00	EX78000-01	EX08300-00	EX08303-08	EX08200-11	EX78009-00	EX278D-Kit	EX78001-00
	AP144480		EX77000-9.6 B04	EX78000-01	EX08300-00	EX08303-08	EX08200-13	EX78009-00	EX278A-Kit	EX78001-00
	AP144480	EFD	EX77000-9.6 A04	EX78000-01	EX08300-00	EX08303-08	EX08200-13	EX78009-00	EX278E-Kit	EX78001-00
	AP144480	S	EX77000-9.6 B00	EX78000-01	EX08300-00	EX08303-08	EX08200-13	EX78009-00	EX278D-Kit	EX78001-00
600	AP130600		EX77000-16.4 B04	EX78000-01	EX08300-00	EX08303-06	EX08200-09	EX78009-00	EX278A-Kit	EX78001-00
600	AP130600	EFD	EX77000-16.4 A04	EX78000-01	EX08300-00	EX08303-06	EX08200-09	EX78009-00	EX278E-Kit	EX78001-00
600	AP130600	S	EX77000-16.4 B00	EX78000-01	EX08300-00	EX08303-06	EX08200-09	EX78009-00	EX278D-Kit	EX78001-00
600	AP150600		EX77000-14.4 B04	EX78000-01	EX08300-00	EX08303-06	EX08200-09	EX78009-00	EX278A-Kit	EX78001-00
600	AP150600	EFD	EX77000-14.4 A04	EX78000-01	EX08300-00	EX08303-06	EX08200-09	EX78009-00	EX278E-Kit	EX78001-00
600	AP150600	S	EX77000-14.4 B00	EX78000-01	EX08300-00	EX08303-06	EX08200-09	EX78009-00	EX278D-Kit	EX78001-00

Options

Optional Class 1 Division 2

Establishing Connections Sizes, Lengths & Bends

Typical Single Protected Enclosure Connections

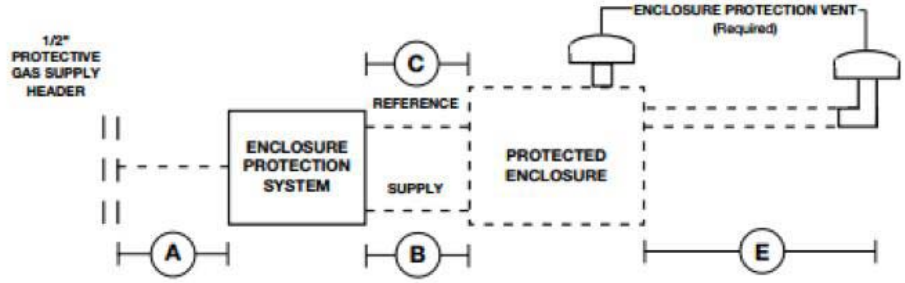

	A	B	C	D	E
Description	System Supply Tubing	Enclosure Supply	Enclosure Reference	Multi - Enclosure Connections	Optional Remote Venting
*Tubing or Pipe Diameter Tubing & Pipe Must Be Fully Reamed	3/8" O.D. Tubing or 1/4" I.D. Pipe	3/8" O.D. Tubing or 1/2" I.D. Pipe	1/4" O.D. Tubing Fully Reamed	1 1/4" I.D. Pipe Fully Reamed	1 1/4" I.D. Pipe Fully Reamed
Maximum Tubing / Pipe Length and Maximum Number of Bends / Elbows	20 Feet 10 Bends	5 Feet 5 Bends	20 Feet 10 Bends	10 Feet 5 Elbows	30 Feet 5 Elbows

TYPICAL MULTIPLE PROTECTED ENCLOSURE CONNECTIONS

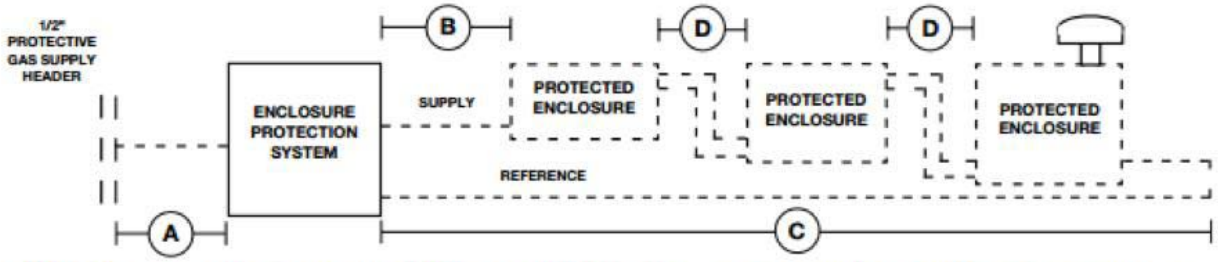

*NOTE: TUBE AND PIPE SIZES ARE TRADE SIZES AND ARE NOT EQUAL IN INSIDE DIAMETERS. DO NOT SUBSTITUTE TUBE FOR PIPE WITH SAME TRADE SIZE.

Helpful Hints

To ensure adequate protective gas flow to the protected enclosure(s), all piping and tubing must be fully reamed.

Precautions must be taken to prevent crimping and other damage to protective gas piping and tubing.

When protecting multiple enclosures with a single enclosure protection system, the enclosures must be connected in series from the smallest to the largest to ensure adequate protective gas flow.

Determining Enclosure Inlet & Outlet Connection Locations

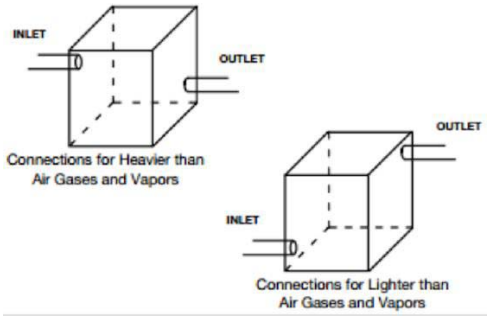

Helpful Hints

If flammable gases are lighter than air, the inlet connection to each enclosure must enter near a bottom corner. The outlet connection, for the required enclosure protection vent or piping to an adjacent protected enclosure, must exit near an extreme opposite top corner. If flammable gases are heavier than air, inlet and outlet connections must be reversed. In all cases, the most prevalent gas must determine the location of inlet and outlet connections.

NEMA Cabinet 4, 4X, 4X (316)

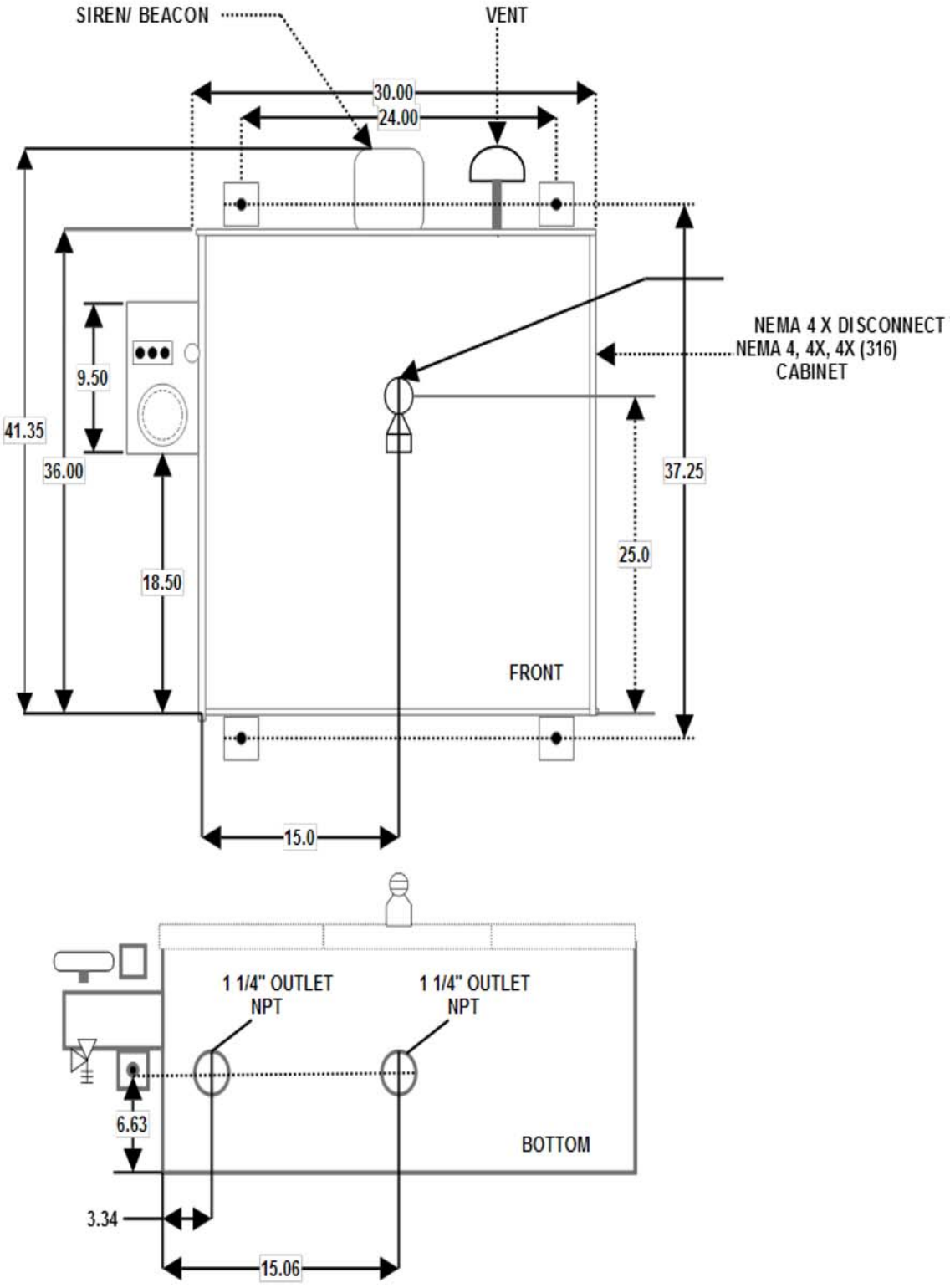

Electrical Supply Requirements

General Wiring Requirements

⚠ WARNING

THIS DEVICE CONTAINS ELECTRICAL PARTS WHICH CAN CAUSE SHOCK OR INJURY.

All electrical connections, conduit and fittings on the protected enclosure must be suitable for the hazardous location in which they are installed. In addition, all conduit and wire must be installed in accordance with NEC as required and all relevant plant and local codes. Note: Do not use seals on conduit used as a protected "wireway" to supply protective gas to adjacent protected enclosures. The same conduit can be utilized for both electrical and pneumatic service to an adjacent protected enclosure(s), provided the conduit is oversized to allow a minimum free clearance equal to or larger than the pipe size required between multiple enclosures.

Enclosure Power Requirements

The protected enclosure(s) electrical power source must originate from a circuit breaker or fused disconnect suitable for the hazardous location in which it is installed. The switch must be located within fifty (50) (15.2 m) feet of the protected enclosure(s) and the protection system and be properly marked.

Alarm Signal Requirements

The WPSA style pressure switch requires a 120 VAC power supply in addition to the alarm signal. The WPS and WPSA Style system alarm signal may originate from the protected enclosure if the alarm signal is disconnected by the protected enclosure's circuit breaker or fused disconnect as stated in Enclosure Power Requirements above.

The protected enclosure(s) alarm signal power may also originate from outside of the protected enclosure. In this application, the protected enclosure may be used as a "wireway" to pass alarm signal wiring from the power source to the alarm device, if the wiring is isolated and properly labeled. In addition, appropriate conduit seals must be provided outside of the protected enclosure separately.

Important Note

NFPA 496 requires the use of an alarm or an indicator to detect the loss of safe enclosure pressure. In addition, the NFPA 496 requires that if an indicator alone is utilized, a protective gas supply alarm must also be installed between the last valve in the protective gas supply and the protected enclosure. Therefore, the protective gas supply to all LPS Style systems must be equipped with the above mentioned protective gas supply alarm. Exception: Systems utilizing an EPSK or GPSK enclosure pressure loss alarm switch accessory will satisfy the above mentioned NFPA requirement.

Typical Enclosure Wiring Methods

In a general sense, protected enclosures should be wired similar to explosion proof enclosures, in accordance with Article 500 of the National Electric Code - NFPA 70.

Single conductor wiring should be placed in rigid metal conduit, seal-flex conduit or other mediums approved for use in the hazardous location surrounding the protected enclosure. Additionally, NFPA 496 requires the use of approved seals on all pressurized enclosure conduit wiring entries, in accordance with NFPA 70. Furthermore, the use of an approved seal is simply the most practical way to prevent excessive leakage through conduit connections.

However, while explosion proof enclosures require conduit seals on all cable entries, in accordance with NFPA 70, other methods of sealed cable entries that are suitable for hazardous locations can be used, such as compression glands.

In conclusion, there are two primary goals. First, the installer should ensure that all associated wiring and cable is protected by pressurization or other means, such as explosion proof conduit or intrinsic safety barriers. Secondly, the installer should ensure that all associated conduit and wireways are sealed to conserve protective gas, unless they are used to supply protective gas to other enclosures or devices.

Typical Enclosure Wiring Connections

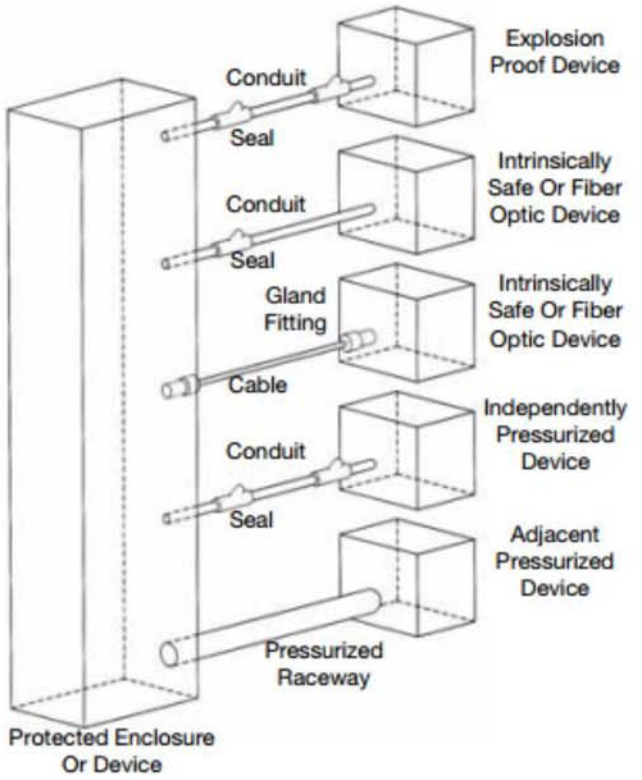

Conduit Installation

Electrical Conduit

1. Choose the location for the enclosure's electrical conduit connection(s) based on the requirements on page 49, "Electrical Supply Requirements".
2. Drill and deburr enclosure conduit fitting holes in the protected enclosure. Mount the fittings.
3. Determine appropriate route for the enclosure electrical and power alarm signal conduit
4. Measure, cut and thread conduit, check conduit fit to ensure proper seating. Fully ream all conduit.
5. Install conduit and tighten all fittings to fitting manufacturer's specifications. Secure conduit to appropriate structural supports as required.
6. Seal all conduit with an approved compound prior to operation of the protection system.

Helpful Hint

It may be impractical to pour all electrical conduit seals prior to installation in the field. However, all conduit connections must be sealed for proper testing and operation of the Enclosure Protection System. Therefore, the use of temporary seals such as duct seal or masking tape for bench or shop testing, prior to final field installation may be used.

WPS Style Conduit Connection Parts

WPS & WPSA style systems provide electrical contacts for audible or visual alarm devices that signal a loss of protected enclosure pressure. They are calibrated to alarm at 0.15" (3.8 mm) for Class I applications. The switches are suitable for hazardous (classified) outdoor locations. Wiring must be installed with a seal and conduit: fittings suitable for the area. Alarm circuit power may be derived from the protected enclosure power source or an intrinsically safe alarm signal source. All associated alarm devices must be protected by suitable means (explosion proof, purged or intrinsically safe).

WPS Style Conduit Connection Parts

Fitting Kits Can Be Bebco Furnished

1. For EXP pressure loss alarm switch connected to an enclosure mounted alarm, one (1) LCK (L fitting Conduit Kit) or equivalent conduit elbow, coupling and seal fittings.
2. For EXP pressure loss alarm switch connected to a remote mounted alarm, one (1) TCK (T fitting Conduit Kit) or equivalent conduit tee, coupling and seal fittings.
3. One (1) lot 150# rating 1/2" galvanized or aluminum pipe.

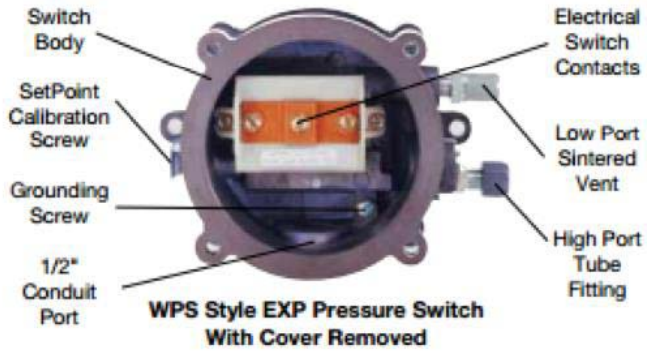

WPS Style EXP Pressure Switch With Cover Removed



WPSA Style EXP Pressure Switch With Cover Removed



TCK "T" Fitting Conduit Kit



LCK "L" Fitting Conduit Kit

Set-up Procedure

Helpful Hints

"Safe" pressure, for purposes of this manual, is defined as a minimum .25 inch (6.4 mm) of water column.

Regulator may be in the locked position upon arrival. To adjust regulator, pull handle to outward position.

Carefully insert T-bar valve key to align valve stem tip of both valves. Practice locking and unlocking key in the RECV valve stem. Practice and familiarization of this process should ease operation of the system.

To test the vent's operation, gently prod the vent flapper open with a soft pointed object, (example: eraser end of a pencil) ensuring that the vent valve works freely. On vertically configured vents, this can be accomplished from within the protected enclosure. Side mounted -90 configured vents can be tested by removing the conduit plug at the bottom of the mounting tee. Multiple operations require only one test per day if enclosure is not opened or left unattended.

Important Notes

The Rapid Exchange® Control Valve and the Enclosure Pressure Control Valve are both operated by utilizing the removable T-bar Valve Key supplied with the system. The purge system is shipped with the T-bar Valve Key locked in the Rapid Exchange® Control Valve stem. To remove the T-bar Valve Key, wrap your index and middle finger around the T-Bar and place your thumb firmly against the system face plate. Pull the T-bar Valve Key straight out firmly. This will unlock and free the T-bar Valve Key for use in the Enclosure Pressure Control Valve stem. When Set-Up or Operating procedures are complete. Replace the T-bar Valve Key in the Rapid Exchange® Control Valve stem and push in firmly to lock in position. THE T-BAR VALVE KEY LOCKS IN THE RAPID EXCHANGE® CONTROL VALVE STEM ONLY.

Operators must secure wrist or stop watch to manually time Exchange Cycle for all applications.

Pepperl+Fuchs Rapid Exchange® Purging Systems are designed to provide a pre-calibrated and certified volume exchange rate. With the Rapid Exchange® pressure gauge set at 60 psi (4.14 bar) minimum, the model 3003 will accomplish the required volume exchanges at a rate of ONE MINUTE PER 3 CUBIC FOOT (85 /min) of enclosure volume.

The volume exchange rate is based on a four (4) enclosure volume exchange. Multiply the required exchange time by 2.5 for applications requiring a ten (10) volume exchange for motors. Regardless of enclosure volume or system flow rate. Pepperl+Fuchs requires that operators withhold power to the enclosure while inducing the Class I enclosure volume exchange, for at least five (5) minutes. Normal exchange times should be doubled if large obstructions block protective gas flow.

Class I Purging Set-Up

READ IMPORTANT NOTES BEFORE PROCEEDING WITH SET-UP

1. Utilizing the T-bar Valve Key supplied with system (see important notes), close Rapid Exchange® Control and Enclosure Pressure Valves fully by turning clockwise (CW).
2. Engage the protective gas supply to the System Supply Inlet and set the Rapid Exchanger Pressure Gauge to 60 psi.
3. Temporarily connect a 0-10 inch (0-254 mm) water column pressure gauge or manometer to the protected enclosure.
4. Check operation of Enclosure Protection Vent as detailed above. (see "Helpful Hints")
5. Seal enclosure(s) and adjust Enclosure Pressure Control Valve, utilizing the T-bar Valve Key, by opening slowly counterclockwise (CCW) to set a "Safe" pressure on the Enclosure Pressure Gauge. NOTE: If pressure setting is difficult to stabilize or set. (see page 18, "Trouble-Shooting Procedures").
6. Carefully remove T-bar Valve Key from Enclosure Pressure Control Valve stem. Ensure Enclosure Pressure Gauge "Safe" pressure setting is stable.
7. Utilizing the T-bar Valve Key supplied with system (see important notes above), lock T-bar Valve Key into Rapid Exchange® Control Valve stem. Open valve fully by turning 90° CCW and quickly ensure the Enclosure Protection Vent opens. Note: The Enclosure Pressure Gauge should move quickly off scale to the right, this is normal for all Rapid Exchange® purging systems.
8. Readjust the regulator to 60 psi (4.14 bar) minimum, while inducing Rapid Exchange® until the test gauge reads approximately 3 to 5 inches (76-127 mm) of pressure and does not fluctuate. (insufficient enclosure pressure will cause the Enclosure Protection Vent to "shuttle') DO NOT exceed 10 inches (254 mm) of pressure within the protected enclosure.
9. Close Rapid Exchanger Control Valve fully and ensure T-bar Valve Key is firmly locked in Rapid Exchange® Control Valve stem.
10. Cease testing and remove test equipment.

Operating Sequence

⚠ WARNING

Do not exceed “Safe” pressure with the Enclosure Pressure Control Valve. Operators must follow step-by-step sequence of the Start-Up Instructions Nameplate on the Protection System.

Class I Purging Operation

With the protective gas supply connected, enclosure power deenergized and alarm system energized (if utilized).

1. Carefully read Start-Up Instructions on system.
2. Check operation of the Enclosure Protection Vent (EPV-3) opening it manually several times. (see page 50, 'Helpful Hint").
3. Seal protected enclosure(s).
4. Unlock T-bar Valve Key from the RECV stern and place in the EPCV stern. (see important notes, page 50), open Enclosure Pressure Control Valve, by turning CCW. to set Enclosure Pressure Gauge at “Safe” pressure, the Pressure Loss Alarm Switch (if utilized) should then activate to silence the alarm system.
5. Ensure the Protection System Enclosure Pressure Gauge maintains a "Safe" pressure for one (1) minute.
6. Carefully remove T-bar Valve Key from Enclosure Pressure Control Valve stem. Ensure Enclosure Pressure Gauge “Safe” pressure setting is stable.
7. Utilizing the T-Par Valve Key supplied with system, open Rapid Exchange® Control Valve fully by turning 90° CCW and quickly ensure the Enclosure Protection Vent opens. Note: The Enclosure Pressure Gauge should move quickly off scale to the right, this is normal for all Rapid Exchange® purging systems.
8. Standby for the exchange time as specified on the Start-Up Instructions (five minutes minimum) then close the Rapid Exchange® Control Valve fully and ensure T-bar Valve Key is firmly locked in Rapid Exchange® Control Valve stem.
9. Wait for the Enclosure Pressure Gauge to return to a “Safe” pressure and energize the protected enclosure(s) power via the local disconnect switch.
10. Ensure the Enclosure Pressure Indicator maintains a "Safe" pressure before leaving system unattended.

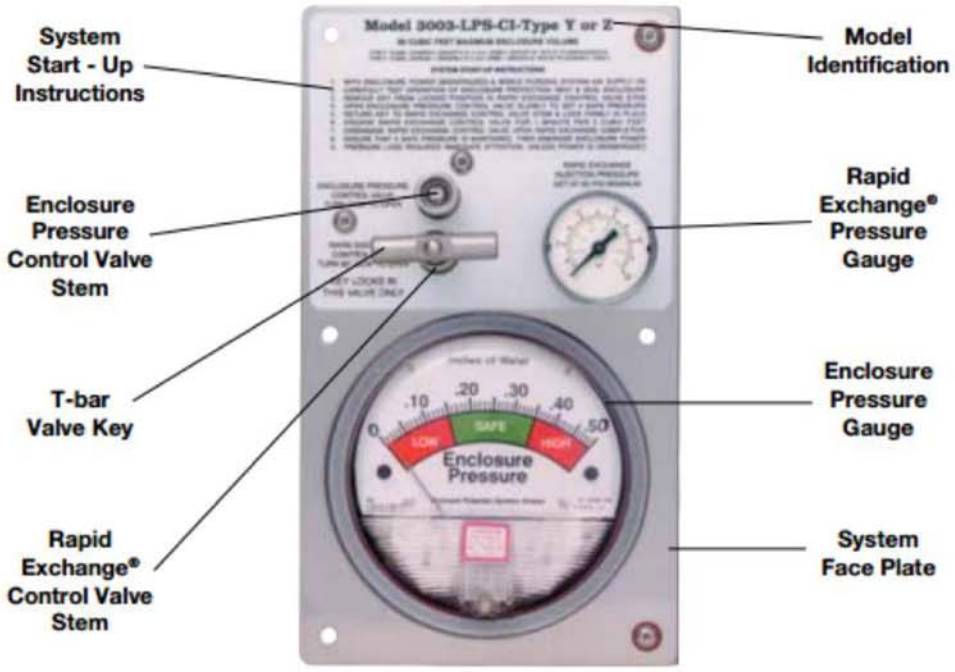

STD WITH EP OPTION (INERT GAS SUPPLIED BY CUSTOMER)

PEPPERL+FUCHS

Model 3003-WPS Type Y or Z
90 CF / 2.5 CM Max. Encl. Volume
REDUCES INTERNAL AREA CLASSIFICATION AS FOLLOWS:
TYPE Z: CL. I, DIV. 2 GR. C & D / ZONE 2, GR. IIB TO NONHAZARDOUS
TYPE Y: CL. I, DIV. 1 GR. C & D / ZONE 1, GR. IIB TO DIV. 2 / ZONE 2

MIN. SUPPLY PRESSURE 80 PSI
MAX. SUPPLY PRESSURE 120 PSI

PURGE CONTROL FOR USE IN HAZARDOUS LOCATIONS IN ACCORDANCE WITH THE NATIONAL FIRE PROTECTION ASSOCIATION STANDARD FOR PURGED AND PRESSURIZED ENCLOSURES FOR ELECTRICAL EQUIPMENT NFPA 496-1996 4S11. THIS PRODUCT MUST BE INSTALLED AND OPERATED IN COMPLETE ACCORDANCE WITH CONTROL DOCUMENT 3003-IOM.
APPROVED BY FM APPROVALS AS ASSOCIATED TYPE Y OR Z PRESSURIZATION CONTROL EQUIPMENT FOR USE IN HAZARDOUS LOCATIONS. REDUCES THE INTERNAL AREA OF A CONNECTED ENCLOSURE IN ACCORDANCE WITH DRAWING NUMBER 3003-IOM.

System Specifications

System dimensions:	See pages 9 & 10
Shipping weight LPS/WPS & WPSA:	10 lb /15 lb
Operating temperature range:	-20 °F - 120 °F
Supply pressure range:	80 -120 psi max.
When using the optional inline filter, max. supply pressure is 80 psi	
Capacity & filtration (VM only):	1.5 oz. @ 20 Microns
Supply requirements:	Clean air or inert gas
Safe pressure setpoint:	0.25"
Safe pressure flowrate:	* 0.1 - 3.5 SCFH (2.8 - 99 l/hr)
Maximum exchange pressure:	* 3" - 5" (7.6 - 127 mm)
Minimum exchange flowrate:	** 12 SCFM/720 SCFH (340 l/m / 20390 l/hr)
Exchange time:	1 minute/3 ft³ (85 l/min)
System supply port:	1/4" FPT
Enclosure supply port:	1/2" FPT
Enclosure reference fitting:	1/4" tube
Switch setting (WPS & WPSA only):	0.15" ± 0.02"
Switch conduit port size:	1/2" FPT
Switch contact ratings:	
WPS style:	120 VAC @ 15 Amps
WPSA style:	*** 120/220 VAC, 24 VDC @10 Amps, 125 VDC @ 50 mA

* Enclosure integrity determines actual flow rate
** With regulator set at 60 psi min. during exchange



Terminal block connections

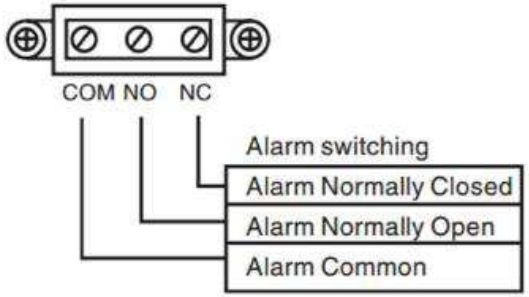

Wiring configuration

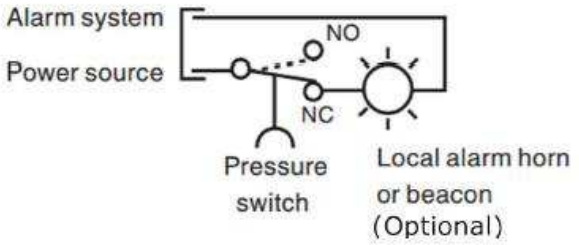

AVAILABLE WITH EP-6000 UNIT

PEPPERL+FUCHS

Twinsburg, OH 44087 USA www.pepperl-fuchs.com

Model 6000 Type X / Ex px

250 CF / 7.2 CM Max. Encl. Volume

Class I, Division 1, Groups A, B, C, D
Class I, Zone 1, Group IIC T4
Intrinsically Safe when installed per 116-013UL-12
[Ex i] Associated Equipment
Ex d [ib px] IIC T4 -20°C ≤ Ta ≤ 60°C

DEMKO 07ATEX 0705753X
II 2 G Ex d [ib px] IIC T4
IECEx ULD8.0003X

Class I, Division 1, Groups A, B, C, D T4
Class I, Zone 1, Groups IIC T4
Intrinsically Safe when installed per 116-013UL-12
[Ex i] Associated Equipment
Class II, Groups E, F, G, Class III
Ex tD 21 T60°C AEx tD 21 T60°C -20°C ≤ Ta ≤ 50°C

09.2188647

II 2 GD Ex d [ib px] IIC T4 tD A21 IP6X T60°C
See DMATEX9337X

Ex d [ib px] IIC T4 tD A21 IP6X T60°C
IECEx CSA09.0007X

PURGE CONTROL FOR USE IN HAZARDOUS LOCATIONS IN ACCORDANCE WITH THE NATIONAL FIREPROTECTION ASSOCIATION STANDARD FOR PURGED AND PRESSURIZED ENCLOSURES FOR ELECTRICAL EQUIPMENT NFPA 496-2003.

Pneumatic parameters

Protective gas supply instrument grade air or inert gas

Pressure requirement 20 ... 120 psig (1.4 ... 8.3 bar) (138 ... 827 kPa) regulated
Safe pressure Gas: 0.25" wc (6.4 mm wc) (0.625 mbar) (62 Pa)
Dust: 0.65" wc (16.5 mm wc) (1.6 mbar) (162 Pa)
Gas and Dust: 0.65" wc (16.5 mm wc) (1.6 mbar) (162 Pa)

Purge flow rate Maximum flow rate measurement for enclosure size (enclosure volume: flow rate):

< 20 ft³ (0.57m³): 5, 12 SCFM (56, 141, 340 l/min), or dynamic
20 ... 30 ft³ (0.57 ... 0.85 m³): 5, 12, 20 SCFM (56, 141, 340, 565 l/min), or dynamic
> 30 ft³ (0.85m³): 5, 12, 20, 30 SCFM (56, 141, 340, 565, 850 l/min), or dynamic

Purge flow and enclosure pressure rate With EPV-6000-xx-01, EPV-6000-xx-02

5 SCFM @ 1.5" wc, (141 l/min @ 3.7 mbar)
12 SCFM @ 2.0" wc, (340 l/min @ 5.0 mbar)
20 SCFM @ 2.7" wc, (565 l/min @ 6.7 mbar)
30 SCFM @ 4.1" wc, (850 l/min @ 10.2 mbar)

Supply

Rated voltage: 90 ... 264 V AC, 48 ... 62 Hz / 0.2 A

Outputs

Output I AUX 1

Output type Dry contacts, SPDT
Inrush current 5 A
Contact loading 2 A @ 240 VAC resistive load
2 A @ 24 VDC

Output II AUX 2

Output type Dry contacts, SPDT
Inrush current 5 A
Contact loading 2 A @ 240 VAC resistive load
8 A @ 24 VDC

Output III ENC_1, ENC_2 (protected enclosure contacts)

Output type Dry contacts (2) SPST, NO
Contact loading 8 A @ 240 VAC / 120 VAC resistive load
8 A @ 24 VDC

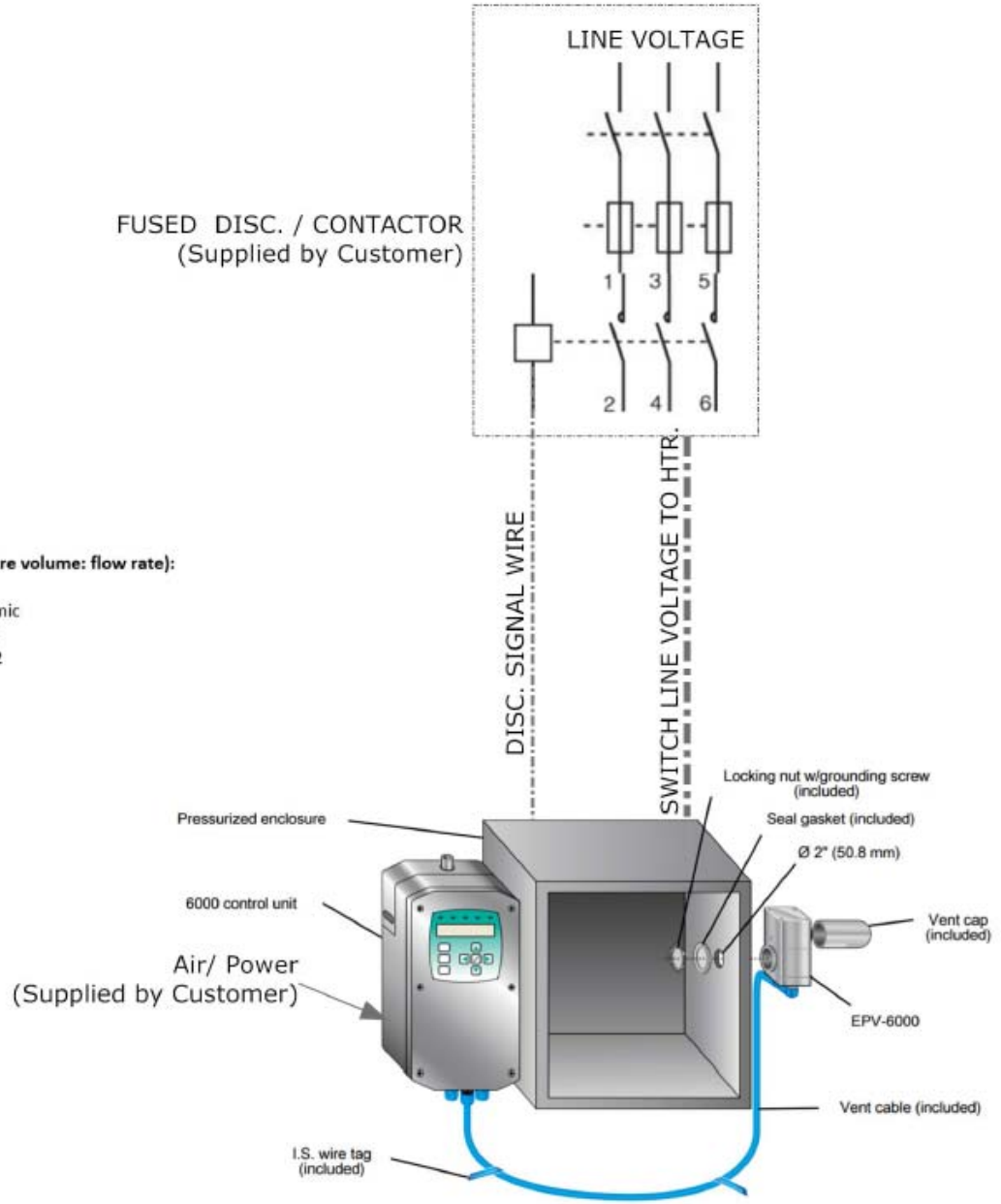

System Maintenance

Regular Maintenance

Drain the Protection System Filter (if utilized) frequently and clean system with non-solvent cleaning agents only.

Long Term Maintenance

Calibrate the enclosure pressure indicator to 0 inches by venting the purge pressure reference port and the protected enclosure to atmosphere and adjusting the calibration screw in the lower center portion of the indicator's face.

Fully open the enclosure pressure control valve, to blow out any deposits around the tip of the valve and to ensure that the enclosure protection vent is operating properly, then carefully readjust system according to the set-up procedure and operating sequence on pages 50. Replace or tighten stem packing nut as required to prohibit stem packing leakage.

Carefully disassemble the enclosure protection vent by loosening the two bottom hex nuts that hold the unit together. **(DO NOT REMOVE CAP NUTS ON TOP OF VENT BODY)**

Carefully clean the flapper valve and vent body seats with warm soap and water, being careful not to extend the vent valve beyond its normal opening point, and being careful not to exert any stress on the valve hinge.

Examine the entire Protection System and the protected enclosure(s), and replace any defective parts curing routine shutdown of the protected enclosure(s). Parts are available from Pepperl+Fuchs on immediate notice as required.

Maintenance Schedule

Date	Work Performed	Performed By

Optional Enclosure Heater

1) Attach heat tape and foam insulation to all lengths of inlet and outlet water piping that are exposed to freezing temperature. We recommend a rating of -30 degrees F at 10 miles per hour wind. Connect the heat tape to an independent source of electrical power.

⚠ CAUTION

Failure to attached heat tape and insulation to exposed inlet and outlet pipes will **void the warranty**.



2) Set the thermostat on the enclosure heater, located at the upper left corner in the enclosure, to 40 – 70 degrees F.

Note: Heater fan continuously operates to recirculate air in the enclosure. The heater coil will activate based on thermostat set point.

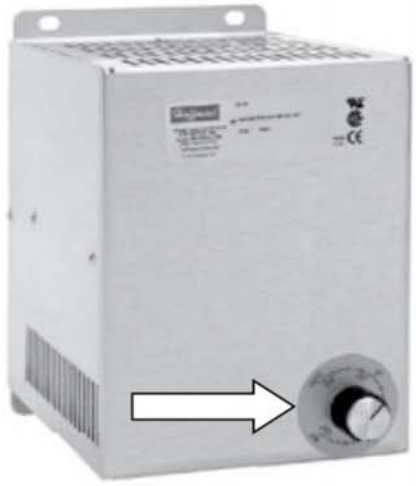

Note: Power must be applied to the water heater for the freeze protection system to operate. If power is not applied ensure the system is completely drained. Neglecting to do so will damage the heater and void the warranty.

Optional GFCI

The optional GFCI consist of (A) Control Module and (B) Current Transformer. This control module has a LCD display indicating real-time measurements. The GFCI module is preset from factory to trip at 3.0 A.	
Test and reset functions are carried out automatically every 24 hours. To manual test the GFCI, press the test button for a minimum of 1.5 seconds. To reset a tripped GFCI, cycle the power of the unit. If equipped with a disconnect handle, turn the handle to the “OFF” position then back to “ON”.	

Optional NON-FUSIBLE Disconnect Switch

DISCONNECT SWITCH MODEL	60 A	100 A	200 A
Operating Voltage	600 V	600 V	600 V
Max Horsepower Rating:			
120 VAC 1-Phase	3	-	-
220/240 VAC 1-Phase	10	10	10
220/240 VAC 3-Phase	20	30	75
440/480 VAC 3-Phase	40	75	150
600 VAC 3=Phase	50	100	200
Short circuit rating with fuses	100	200	200
Branch circuit fuse type	J	J	J
Max fuse rating (A)	60	100	200

Disconnect Handle

NEMA Type: 4, 4X	Color: Red/Yellow

Optional FUSIBLE Disconnect Switch

DISCONNECT SWITCH MODEL	200 AMP	100 AMP
RATING (A)	200 A	100 A
	600 V	600 V
Max horsepower rating/ Max motor FLA current phase Three		
208 v	50/150	25/78.5
240 v	60/154	30/80
480 v	125/156	60/77
600 v	130/144	75/77
DC 125 V (2 pole in series)	15/112	7.5/58
DC 250 V (3 pole in series)	40/140	20/38
Short circuit rating with fuses	200	200
Branch circuit fuse type	J	J
Max fuse rating (A)	200	100

DISCONNECT HANDLE

NEMA TYPE: 4,4x	COLOR: RED/YELLOW

WIRING SCHEMATICS

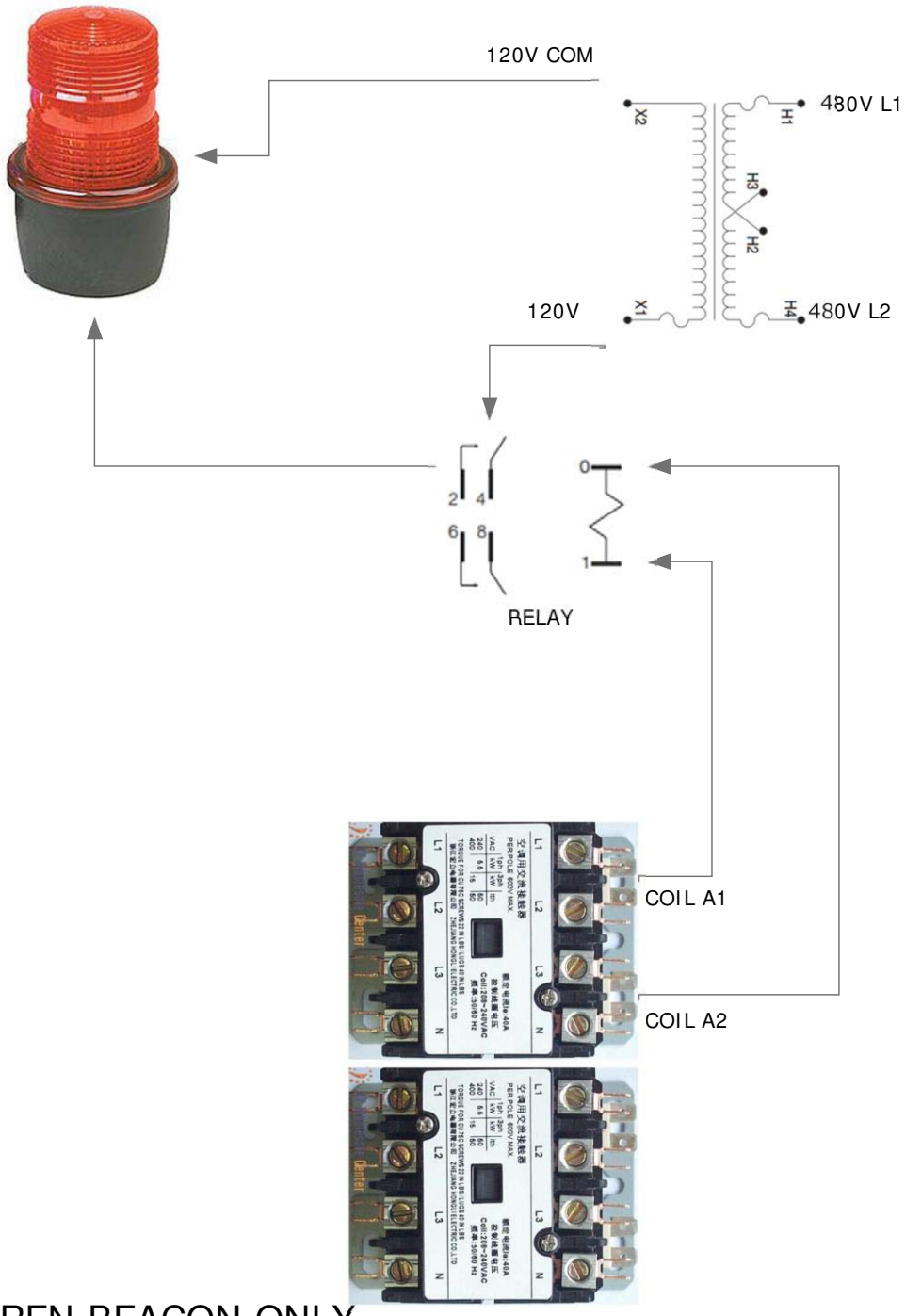

AP SIREN BEACON ONLY
WIRING DIAGRAM

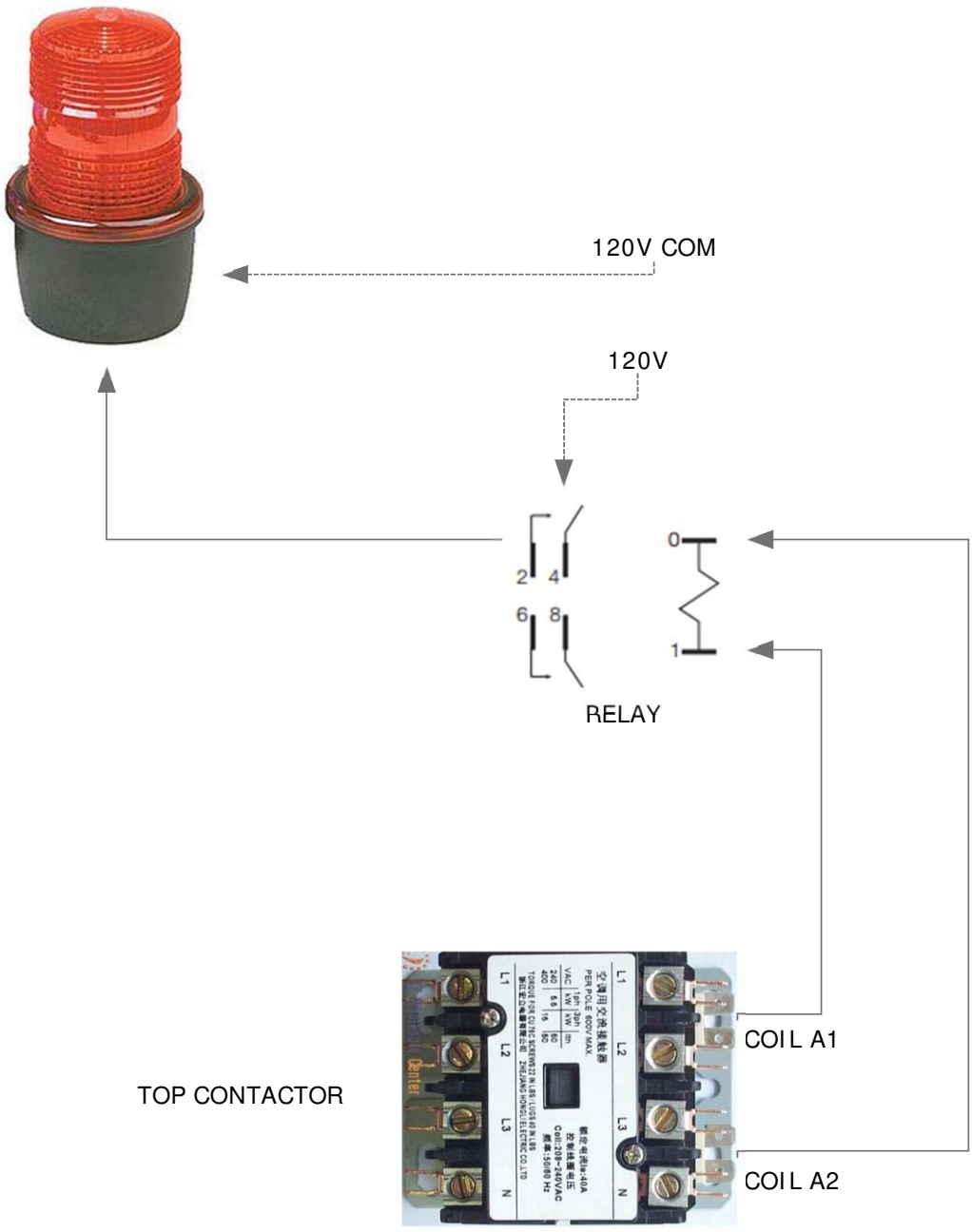

AP SIREN BEACON ONLY
WIRING DIAGRAM

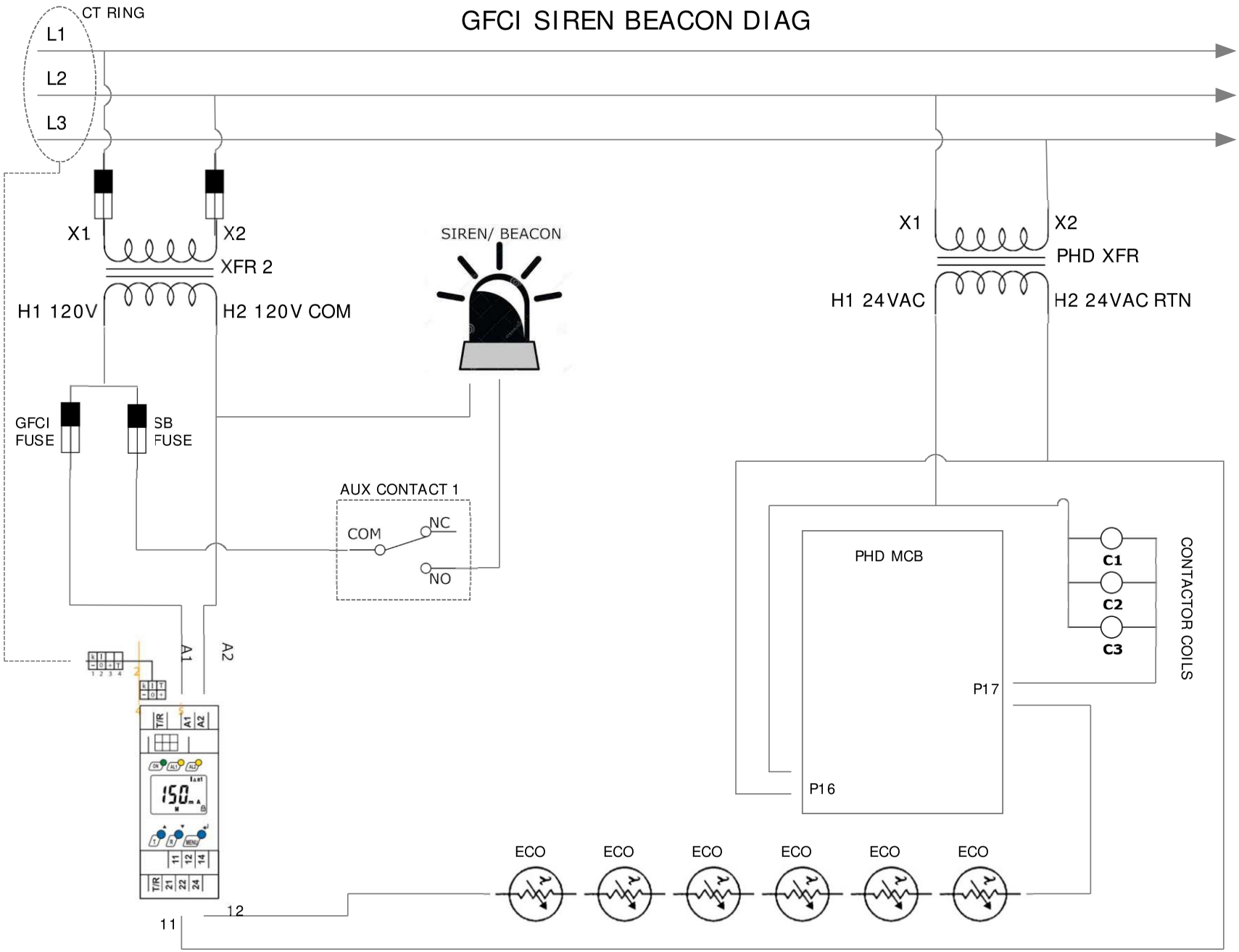
GFCI SIREN BEACON DIAG
CT RING
L1
L2
L3
X1
X2
XFR 2
H1 120V
H2 120V COM
SIREN/ BEACON
X1
X2
PHD XFR
H1 24VAC
H2 24VAC RTN
GFCI FUSE
SB FUSE
AUX CONTACT 1
COM
NC
NO
A1
A2
PHD MCB
C1
C2
C3
CONTACTOR COILS
P17
P16
ECO
ECO
ECO
ECO
ECO
ECO
12
11

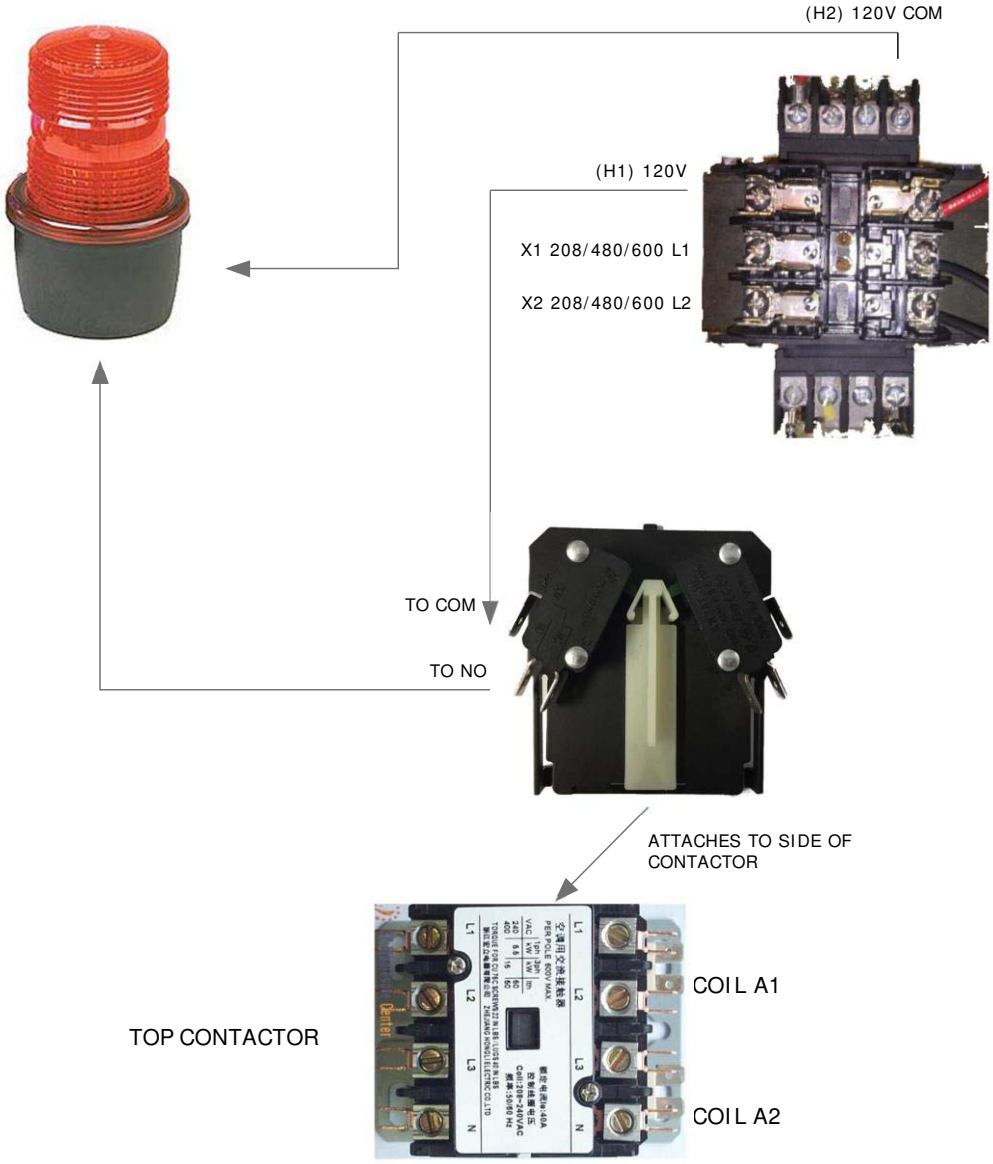

AP SIREN BEACON ONLY WIRING DIAGRAM

FREEZE PROTECTION

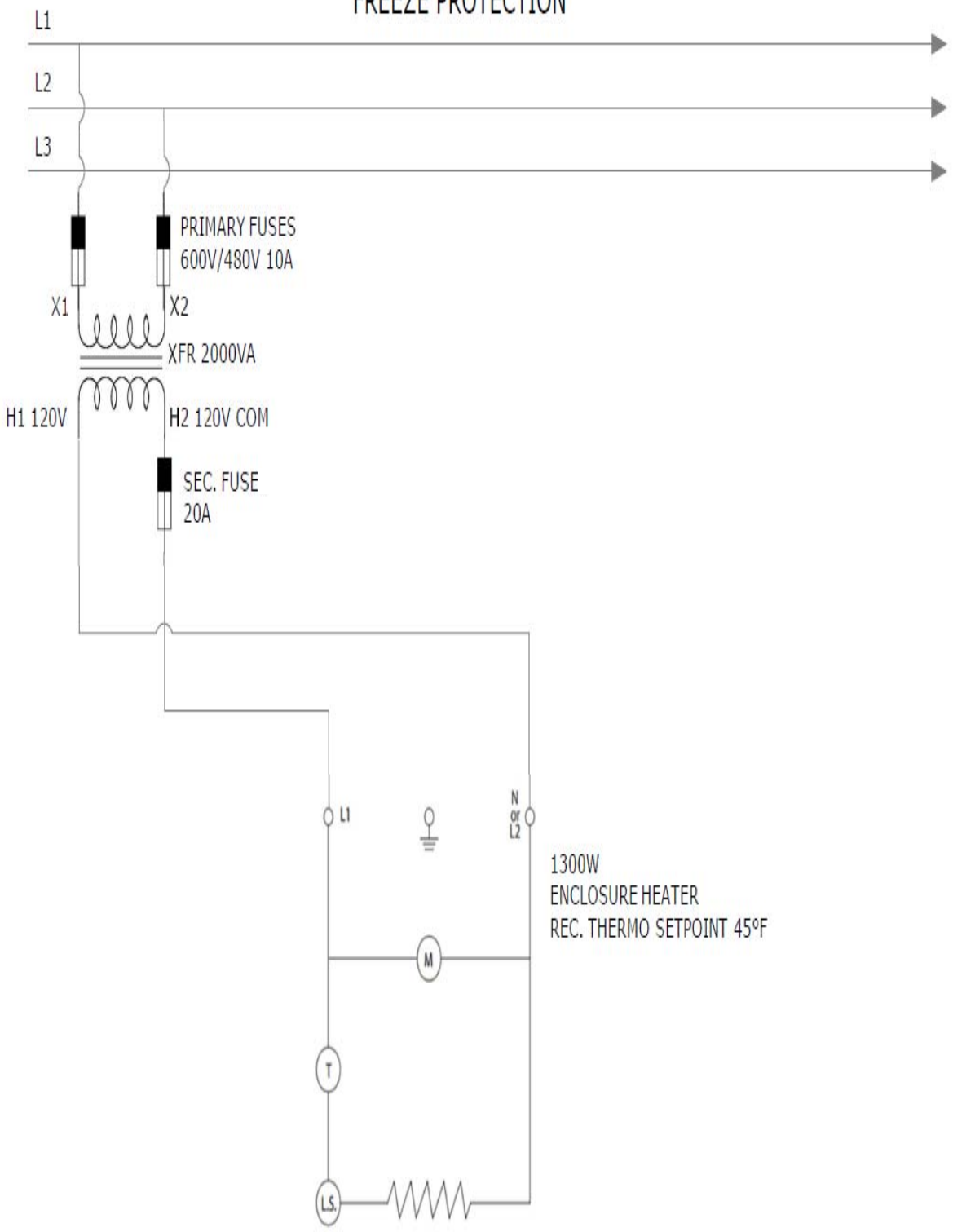

LOW VOLTAGE SCHEMATIC

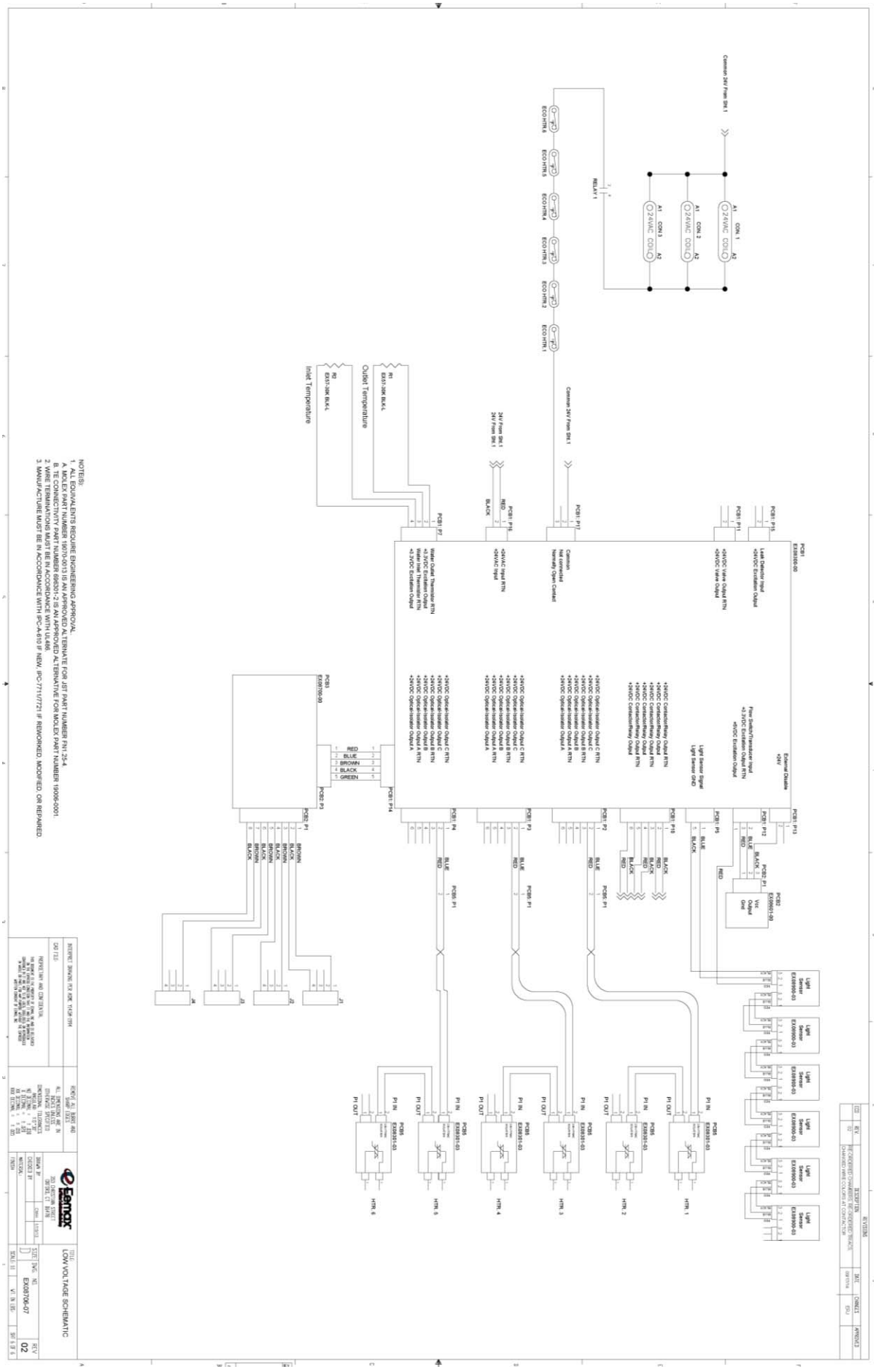

AP036480/AP048480 WIRING SCHEMATIC

HEATER ELEMENT DATA				TOTAL	
MODEL	VALUES PER MODULE				
	VOLTS	K-WATTS	AMPS	K-WATTS	AMPS
AP036480	480	12	14.42	36	44
AP048480	480	16	23.19	48	58

NOTE: ALL WIRE IS UL 1015, 105°C, 600V RATED

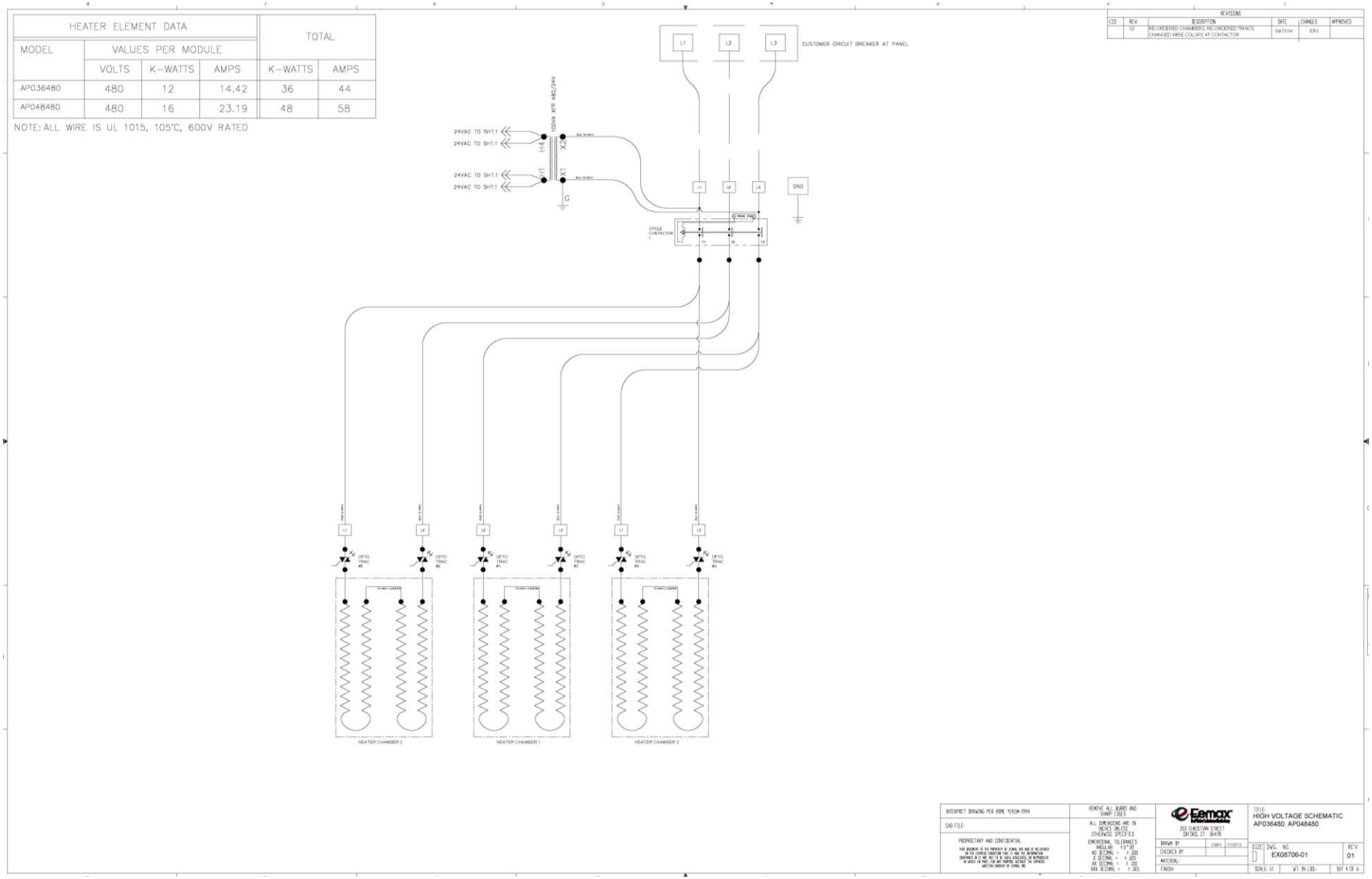

AP032208/AP041208 WIRING SCHEMATIC

HEATER ELEMENT DATA				TOTAL		FUSE
MODEL	VALUES PER MODULE					
	VOLTS	K-WATTS	AMPS	K-WATTS	AMPS	
AP032208	208	5.33	18.85	32	89	50
AP041208	208	6.83	18.85	41	114	60

NOTE: ALL WIRE IS UL 1015, 105°C, 600V RATED

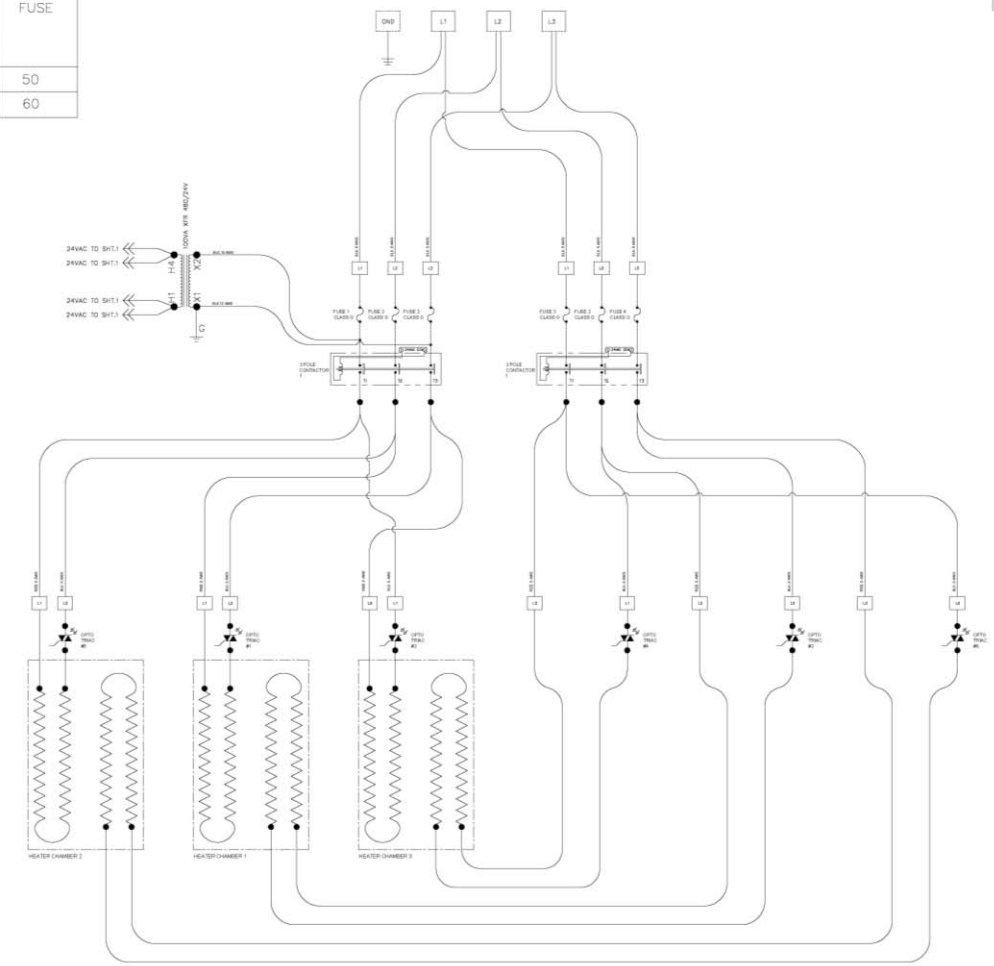

REVISIONS

ECO	REV.	DESCRIPTION	DATE	CHANGES	APPROVED
	02	RE-ORDERED CHAMBERS, RE-ORDERED TRIACS, CHANGED WIRE COLORS AT CONTACTOR	09/17/14	ERJ	

INTERPRET DRAWING PER ASME Y14.5M-1994

CAD FILE:

PROPRIETARY AND CONFIDENTIAL

THIS DOCUMENT IS THE PROPERTY OF EEMAX, INC AND IS DISCLOSED ON THE EXPRESS CONDITION THAT IT AND THE INFORMATION CONTAINED IN IT ARE NOT TO BE USED, DISCLOSED OR REPRODUCED IN WHOLE OR IN PART, FOR ANY PURPOSE WITHOUT THE EXPRESS WRITTEN CONSENT OF EEMAX, INC

REMOVE ALL BURRS AND SHARP EDGES

ALL DIMENSIONS ARE IN INCHES UNLESS OTHERWISE SPECIFIED

DIMENSIONAL TOLERANCES
ANGULAR: ± 0° 30'
NO DECIMAL: ± .030
X DECIMAL: ± .025
XX DECIMAL: ± .015
XXX DECIMAL: ± .005

Eemax
ISO CHRISTIAN STREET
OXFORD, CT 06478

DRAWN BY: CMH 1/19/13
CHECKED BY: ERJ 9/17/14
MATERIAL:
FINISH

TITLE:
HIGH VOLTAGE SCHEMATIC
AP032208, AP041208

SIZE: D
DWG. NO.: EX08706-02
REV: 02
SCALE: 1:1
WT. IN LBS:
SHT 3 OF 6

AP054480 WIRING SCHEMATIC

HEATER ELEMENT DATA				TOTAL		FUSE
MODEL	VALUES PER MODULE					
	VOLTS	K-WATTS	AMPS	K-WATTS	AMPS	
AP054480	480	18	37.5	54	65	40

NOTE: ALL WIRE IS UL 1015, 105°C, 600V RATED

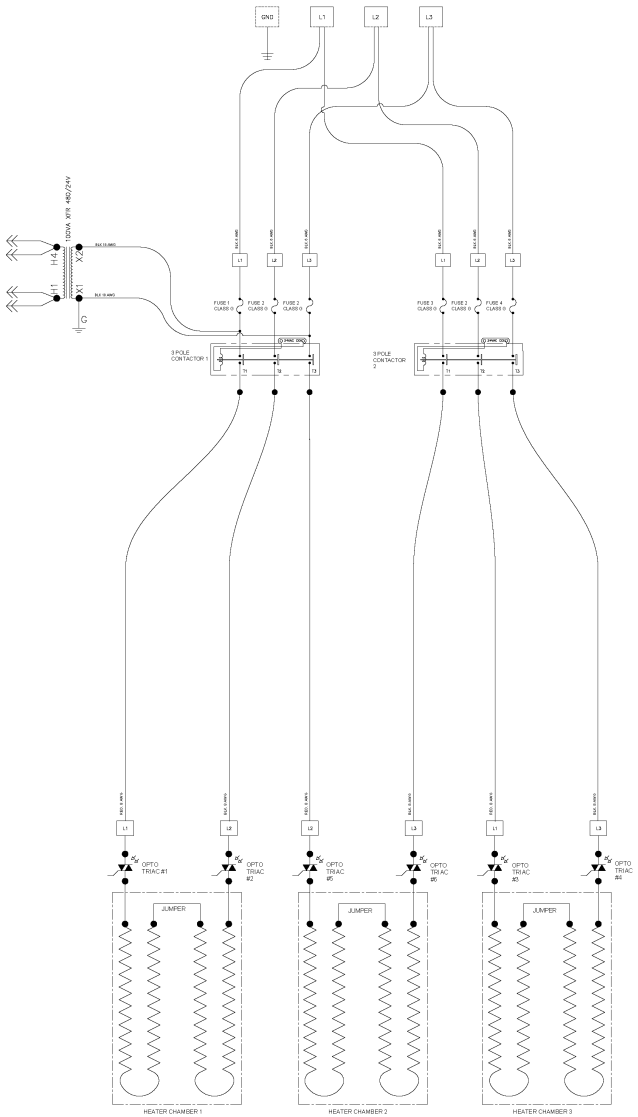

REVISIONS

ECO	REV.	DESCRIPTION	DATE	CHANGES	APPROVED
	02	RE-ORDERED CHAMBERS, RE-ORDERED TRIACS, CHANGED WIRE COLORS AT CONTACTOR	09/17/14	ERJ	

INTERPRET DRAWING PER ASME Y14.5M-1994

CAD FILE:

PROPRIETARY AND CONFIDENTIAL

THIS DOCUMENT IS THE PROPERTY OF ZEMAL, INC AND IS DELIVERED ON THE EXPRESS CONDITION THAT IT AND THE INFORMATION CONTAINED IN IT AND NOT TO BE USED, REPRODUCED OR REPRODUCED IN WHOLE OR PART, FOR ANY PURPOSE WITHOUT THE EXPRESS WRITTEN CONSENT OF ZEMAL, INC.

REMOVE ALL BURRS AND SHARP EDGES

ALL DIMENSIONS ARE IN INCHES UNLESS OTHERWISE SPECIFIED

DIMENSIONAL TOLERANCES
ANGULAR = ±0°30'
NO DECIMAL = ± .030
X DECIMAL = ± .020
XX DECIMAL = ± .010
XXX DECIMAL = ± .005

353 CHRISTIAN STREET
OXFORD, CT 06478

DRAWN BY	CMH	1/15/13
CHECKED BY	ERJ	9/12/14
MATERIAL:		
FINISH		

TITLE:
HIGH VOLTAGE SCHEMATIC
AP054480

SIZE	DWG. NO.	REV
D	EX08706-03	02

SCALE: 1:1 | WT. IN LBS: | SHT 7 OF 7

AP054208 WIRING SCHEMATIC

HEATER ELEMENT DATA				TOTAL		FUSE
MODEL	VALUES PER MODULE					
	VOLTS	K-WATTS	AMPS	K-WATTS	AMPS	
AP054208	208	9	24.95	54	150	50

NOTE: ALL WIRE IS UL 1015, 105°C, 600V RATED

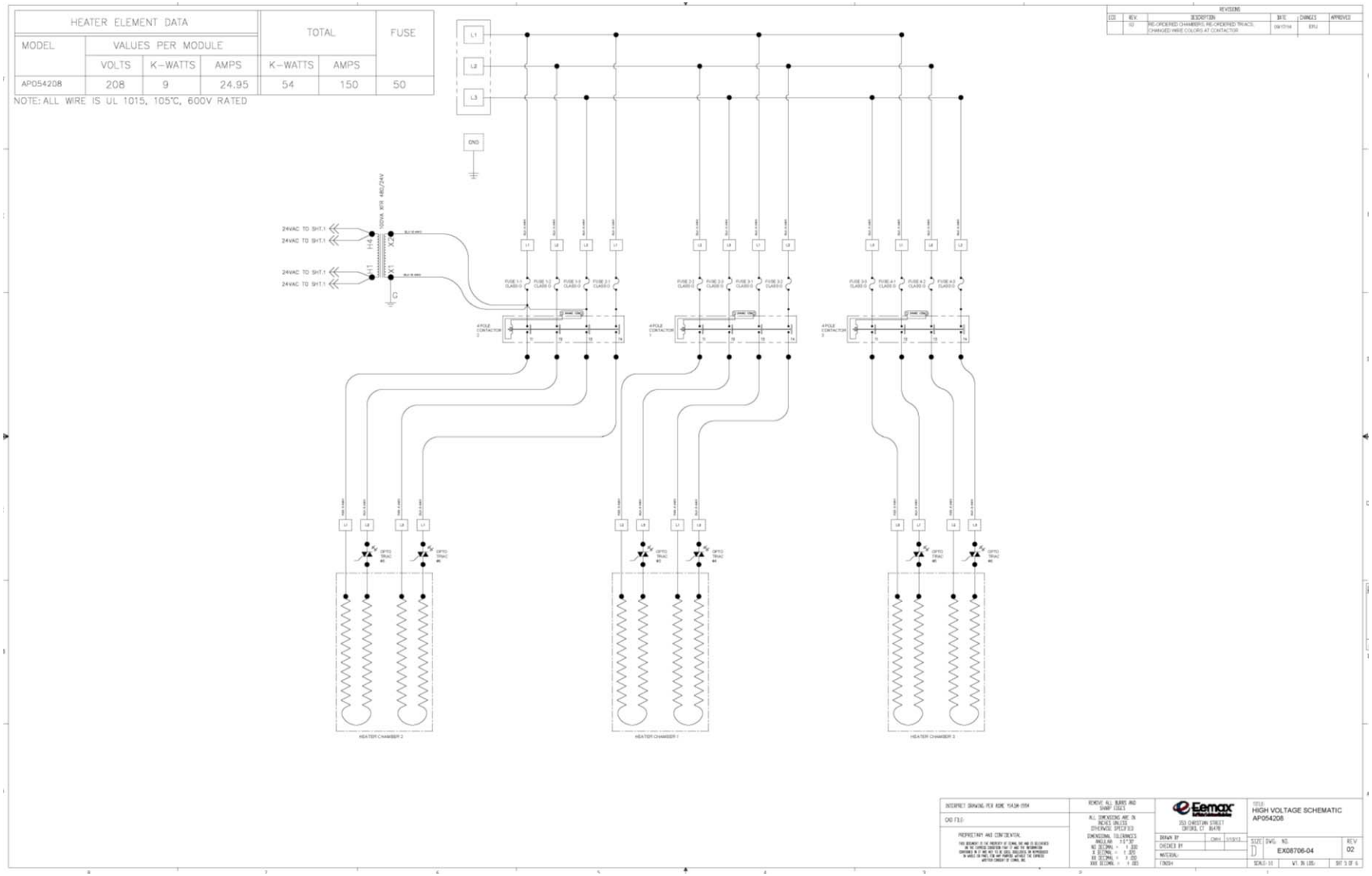

AP072480/AP063480 WIRING SCHEMATIC

HEATER ELEMENT DATA				TOTAL		FUSE
MODEL	VALUES PER MODULE					
	VOLTS	K-WATTS	AMPS	K-WATTS	AMPS	
AP072480	480	12	25	72	87	50
AP063480	480	10.5	21.875	63	76	50

NOTE: ALL WIRE IS UL 1015, 105°C, 600V RATED

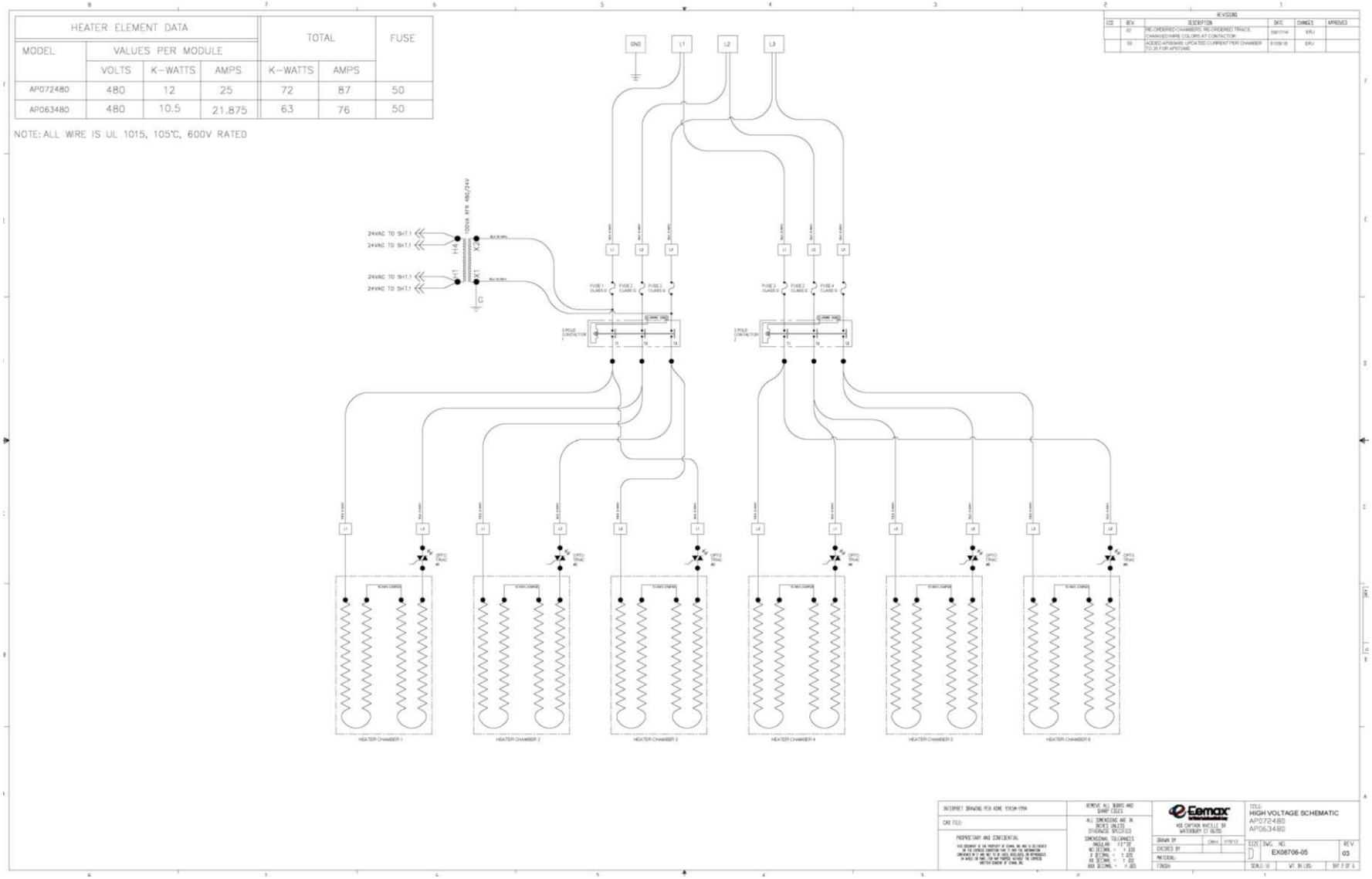

AP064208/AP096480/AP108480 WIRING SCHEMATIC

HEATER ELEMENT DATA				TOTAL		FUSE
MODEL	VALUES PER MODULE					
	VOLTS	K-WATTS	AMPS	K-WATTS	AMPS	
AP064208	208	10.66	29.55	54	175	60
AP108480	480	18	21.63	108	130	60
AP126480	480	21	25.23	126	152	60

NOTE: ALL WIRE IS UL 1015, 105°C, 600V RATED

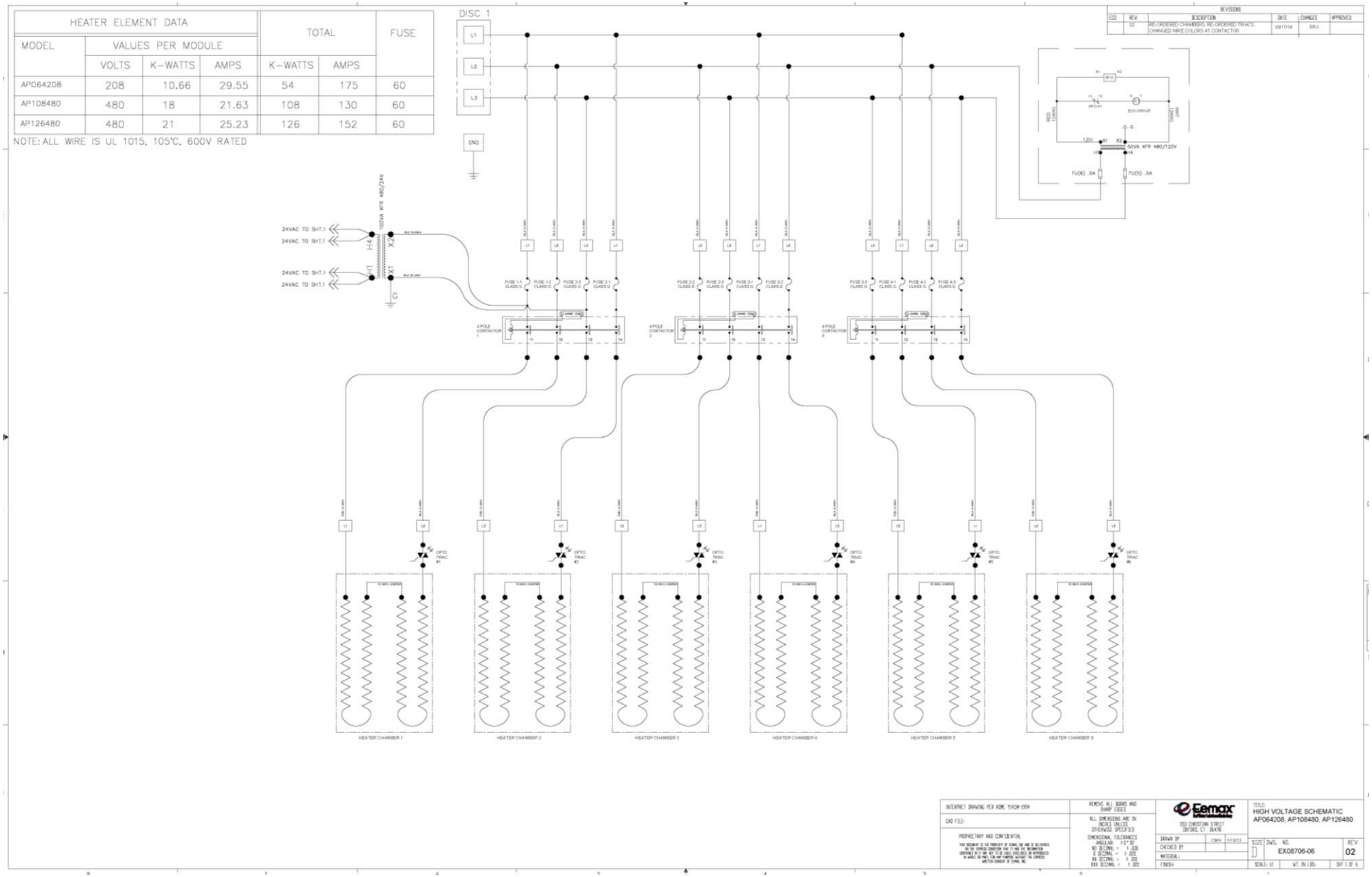



USA AND CANADA:

Eemax Inc.
400 Captain Neville Drive, Waterbury, CT 06705
Toll Free: 1-800-543-6163, or 203-267-7890 Fax: 203-267-7975
info@eemaxinc.com