INSTALLATION INSTRUCTIONS
CARE AND MAINTENANCE

American Standard
Style That Works Better

✓4188A.105.020

Cadet® PRO 2-piece Toilet
Elongated and Round Front
Models 215AA, 215BA, 215AB, 215BB, 215FA, 215FC, 215CA, 215DA, 215CB, 215DB Series

Thank you for selecting American Standard - the benchmark of fine quality for over 100 years. To ensure this product is installed properly, please read these instructions carefully before you begin. (Certain installations may require professional help.) Also be sure your installation conforms to local codes.

⚠ **CAUTION: PRODUCT IS FRAGILE. TO AVOID BREAKAGE AND POSSIBLE INJURY HANDLE WITH CARE!**
NOTE: *Pictures may not exactly define contour of china and components.*

TANK 4188A and 4188B

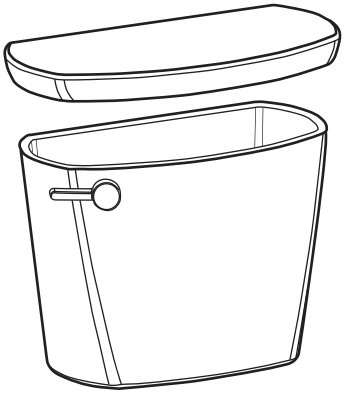

EZ-INSTALL KIT INCLUDED WITH TANK


Tank To Bowl Gasket

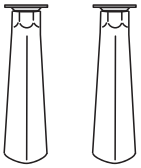
Attachment Handles with Nuts (2)


Plastic Washers (2)

BOWL 3517A, 3517C, 3517F ELONGATED
BOWL 3517B, 3517D ROUND FRONT

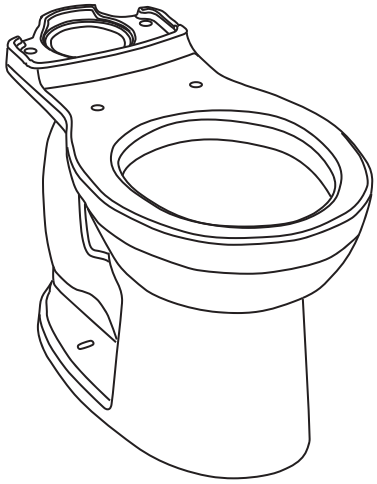

EZ-INSTALL KIT INCLUDED WITH BOWL

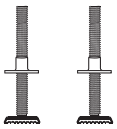
T-Bolts with Retainer (2)


Bolt Caps (2)


Bowl-To-Floor Knobs (2)

SOLD SEPARATELY

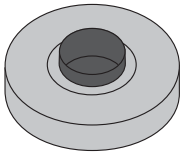
Wax Ring

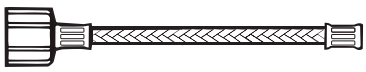
Water Supply Line

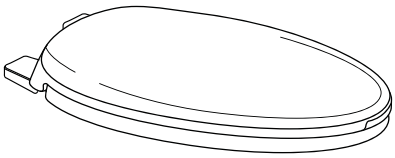
Slow Close Toilet Seat

SAVE FOR FUTURE USE

Product names listed herein are trademarks of AS America, Inc.
© AS America, Inc. 2012

ROUGHING-IN DIMENSIONS:
NOTE: *Distance from wall to closet flange centerline must be as listed on chart under ROUGH-IN DIMENSION "A", the BOWL HEIGHT is listed as DIMENSION "B".*

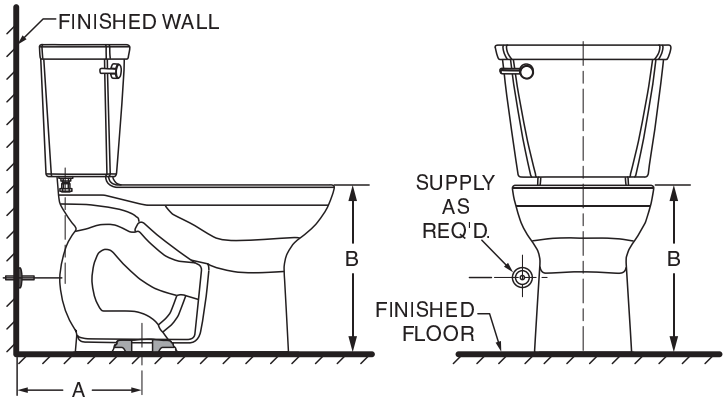

BOWL SHAPE	ROUGH-IN DIM. "A"	BOWL HEIGHT DIM. "B"	COMBO MODEL	BOWL MODEL	TANK MODEL
RIGHT HEIGHT® ELONGATED	12" (305mm)	16-1/2" (419mm)	215AA	3517A	4188A
	10" (254mm)	16-1/2" (419mm)	215AB	3517A	4188B
RIGHT HEIGHT® ROUND FRONT	12" (305mm)	16-1/2" (419mm)	215BA	3517B	4188A
	10" (254mm)	16-1/2" (419mm)	215BB	3517B	4188B
COMPACT RIGHT HEIGHT® ELONGATED	12" (305mm)	16-1/2" (419mm)	215FA	3517F	4188B
	14" (356mm)	16-1/2" (419mm)	215FC	3517F	4188A
ELONGATED	12" (305mm)	15" (381mm)	215CA	3517C	4188A
	10" (254mm)	15" (381mm)	215CB	3517C	4188B
ROUND FRONT	12" (305mm)	15" (381mm)	215DA	3517D	4188A
	10" (254mm)	15" (381mm)	215DB	3517D	4188B

Before You Start:

If Removing An Existing Toilet

Turn Off Water Supply

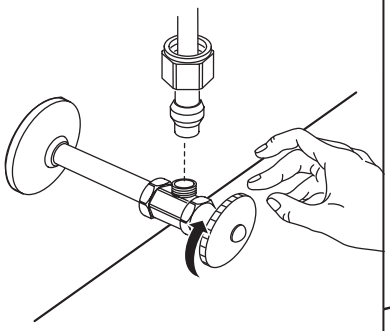

Flush to remove water from tank; sponge remaining water from bowl before removing toilet.

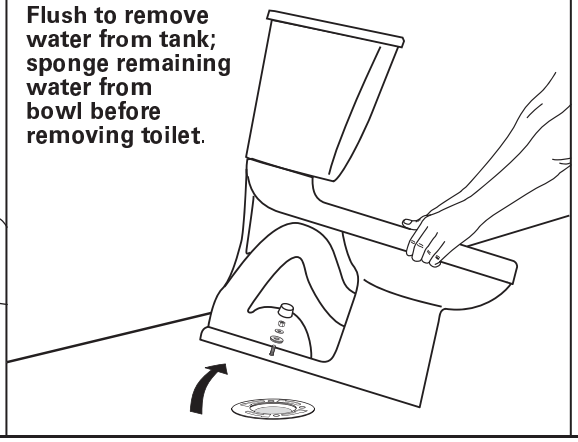

Clean Flange

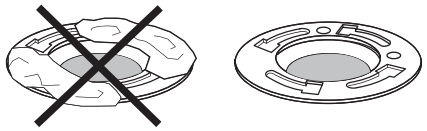

Caution: If leaving floor flange open for more than 1-2 hours, cover flange to prevent escaping sewer gases.

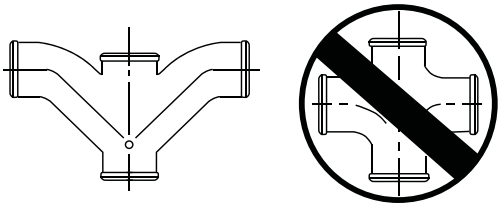

Recommended fitting type for back-to-back installations.

BACK-TO-BACK INSTALLATION

Depending upon your plumbing and venting conditions, the flow from the Cadet® PRO in a back-to-back installation may create a vacuum on the system and draw water from the opposing bowl. The National Standards Plumbing Code prohibits the use of a cross fitting for drainage as throw over is possible. The code does approve a directional "Y" style fitting with proper venting to direct the water downward and away from the other toilet.

1

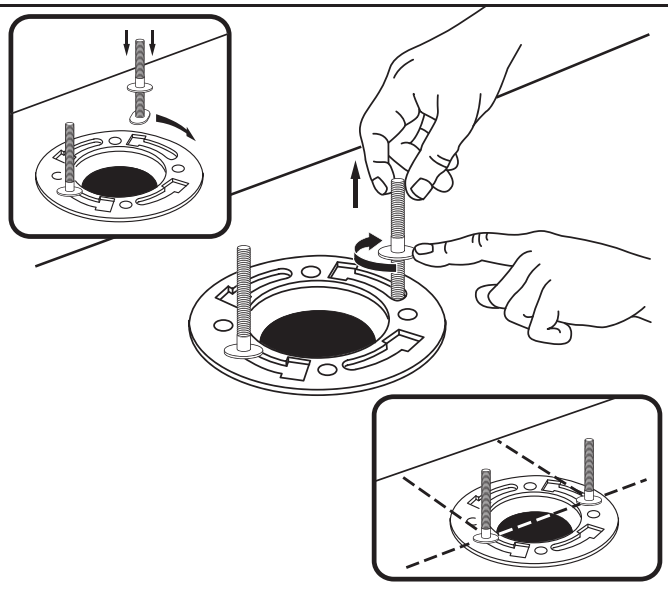

2 Press firmly.

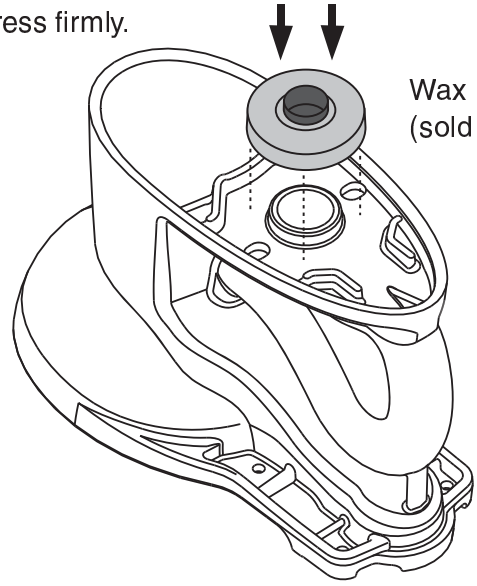

3

Apply weight evenly. Do not move after placement. Water tight seal may break.

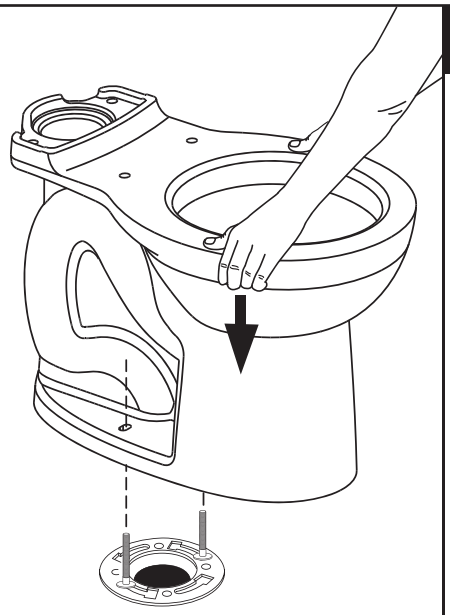

4

⚠ Hand tighten only. Do not overtighten.

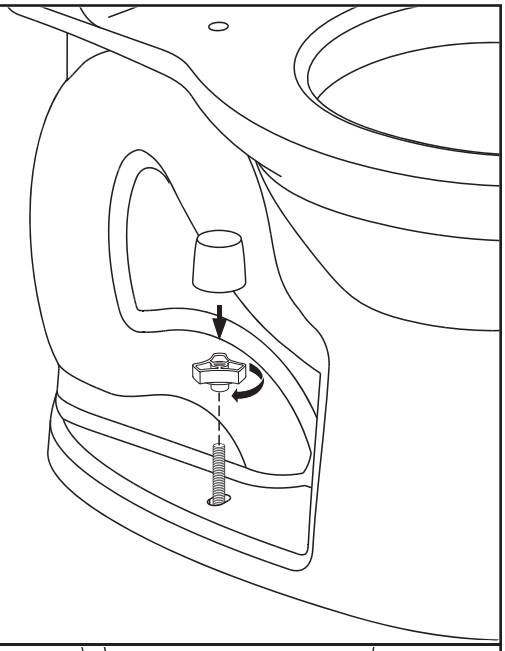

5

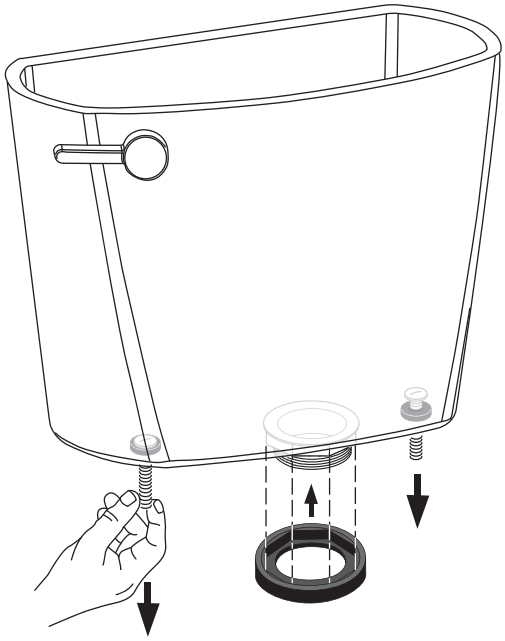

6

Tighten handles alternately until the tank contacts the front and back of the bowl achieving china-to-china contact.

NOTE: To ease installation, push down on the top of the tank while tightening handles.

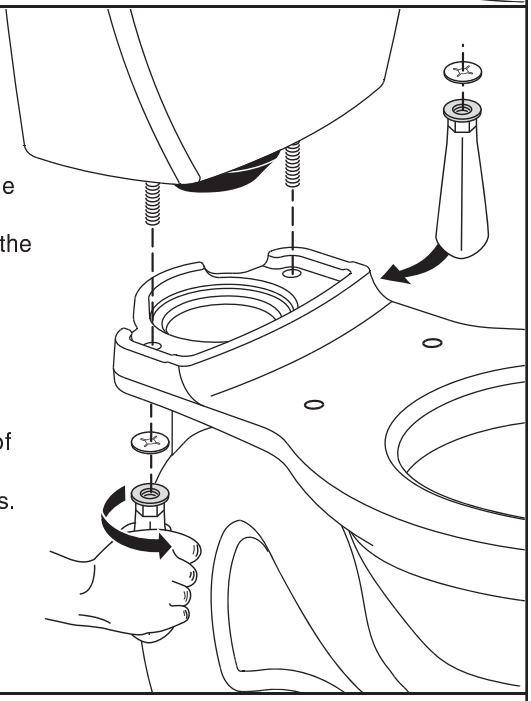

7

Ⓐ Connect water supply line. (Sold separately) Hand tighten nut.

Ⓑ Turn on water supply.

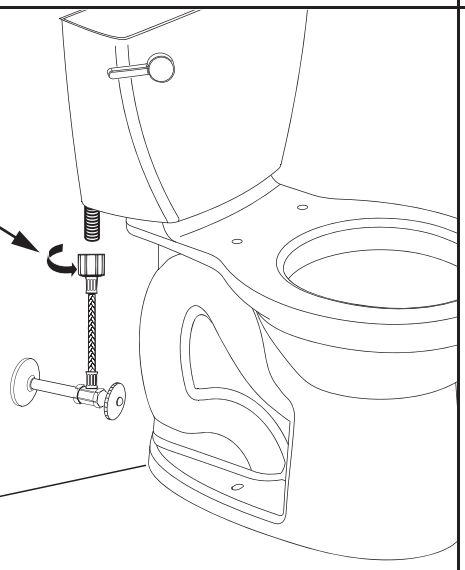

⚠ WARNING: Overtightening of water supply line nuts could result in breakage and potential flooding. If the connection leaks after hand tightening, replace the supply line. Do not use any type of sealant on the water supply connection. Use of plumber's putty, pipe dope, or any other type of sealant will void the warranty.

8

A

Adjust water level to level indicated on tank by turning water level adjustment knob to move float cup up or down.

B

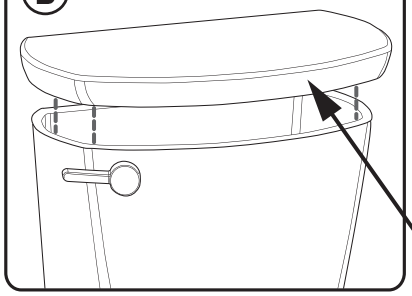

REPAIR PARTS LABEL LOCATED UNDER TANK LID.

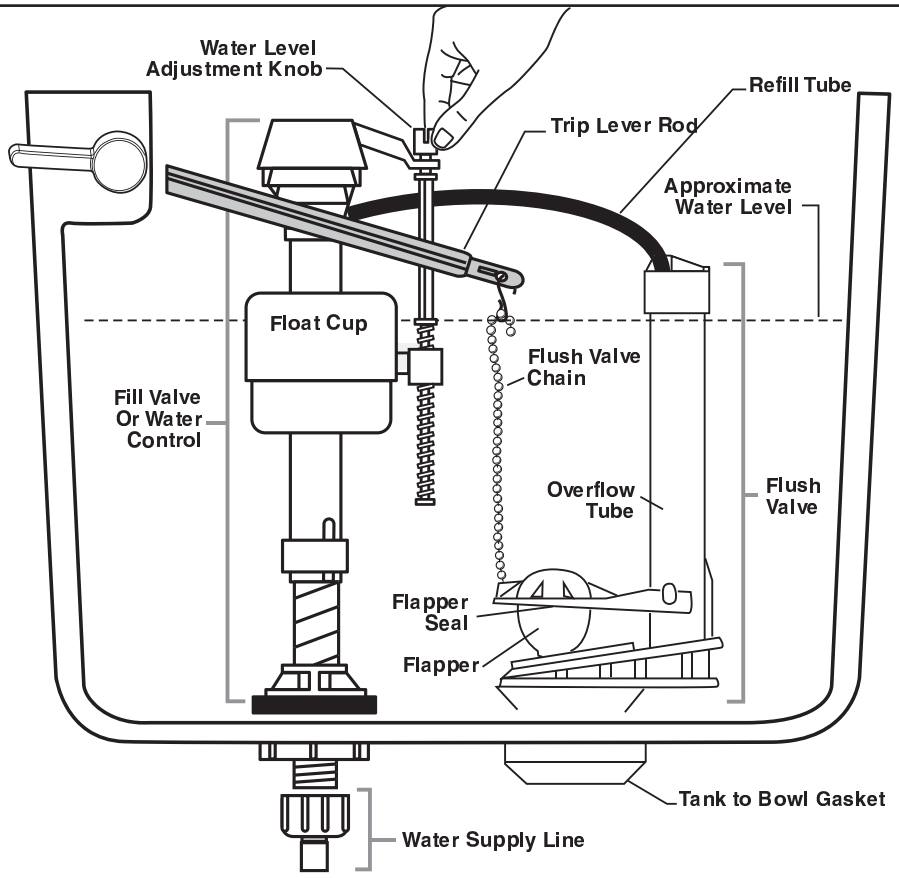

CARE AND CLEANING

When cleaning your toilet, wash it with mild, soapy water, rinse thoroughly with clear water and dry with a soft cloth.
WARNING: Do not use in-tank cleaners. These products can seriously corrode fittings in the tank. This damage can cause leakage and property damage. American Standard shall not be responsible or liable for any damage caused by the use of in-tank cleaners.

TROUBLESHOOTING GUIDE - See Step 8 For Diagram

Problem	Possible Cause	Corrective Action
Does not flush	a. Water supply valve closed. b. Supply line blocked. c. Flush valve chain too loose or disconnected. d. Sand or debris lodged in water control.	a. Open valve and allow water to fill tank. b. Shut off water supply, disconnect supply line and inspect all gaskets and washers. Reassemble. c. Readjust chain length as required. d. Shut off water supply. Remove cap and clean as per Fluidmaster maintenance instructions at: www.americanstandard-us.com/enews/fluidmasterguide.pdf
Poor or sluggish flush	a. Bowl water level too low. b. Supply valve partly closed. c. Partially clogged trapway and/or drain pipe and/or vent. d. Supply pressure too low.	a. Check that refill tube is connected to water control and inserted into overflow tube without being kinked or damaged. b. Open supply valve fully. Be sure that proper supply tube size is used. c. Remove obstruction. Consult a plumber if necessary. d. Normal supply pressure must be at least 20 psi.
Toilet leaks	a. Poor supply line connection. b. Poor bowl to tank/floor connection.	a. Review Step 7 of installation procedure. b. Review Step 1 through 6 of installation procedure.
Toilet does not shut off	a. Flapper seal leaking or deformed. b. Sand or debris lodged in water control. c. Flush valve chain too tight, holding flapper open.	a. Clean debris from seal surface. Replace flapper seal as needed. See web for more info. b. Shut off water supply. Remove cap and clean as per Fluidmaster maintenance instructions at: www.americanstandard-us.com/enews/fluidmasterguide.pdf c. Readjust chain length as needed.
Toilet bowl rocks after installation	a. Wax ring not fully compressed. b. Floor not level.	a. Retighten bowl-to-floor knobs. b. Use toilet shims and /or place a bead of caulk around the base of the toilet.

FOR REPAIR PARTS LIST, SEE LABEL UNDER TANK LID.

In the United States:
American Standard Brands
P.O. Box 6820
Piscataway, New Jersey 08855
Attention: Director of Customer Care
For residents of the United States, warranty information may also be obtained by calling the following toll free number: (800) 442-1902
www.americanstandard.com

In Canada:
AS Canada, ULC
5900 Avebury Rd.
Mississauga, Ontario
Canada L5R 3M3
Toll Free: (800) 387-0369
www.americanstandard.ca

In Mexico:
American Standard B&K Mexico
S. de R.L. de C.V.
Via Morelos #330
Col. Santa Clara
Ecatepec 55540 Edo. Mexico
Toll Free: 01-800-839-1200
www.americanstandard.com.mx

AS AMERICA, INC. ONE YEAR LIMITED WARRANTY FOR COMMERCIAL FIXTURES

If inspection of this AS America, Inc. ("American Standard®") plumbing product, within one year after its initial purchase, confirms that it is defective in materials or workmanship, American Standard® will repair or, at its option, exchange the product for a similar model.

If the commercial fixture is purchased with a matching American Standard flush valve, American Standard will extend the limited commercial warranty for the commercial fixture to five years. Proof of purchase is required and must show that the commercial fixture and flush valve are purchased together and in the same proof of purchase document.

This limited warranty applies only to the original purchaser and installation of these products. In the event of a limited warranty claim, proof of purchase will be required – **save sales receipt.**

This limited warranty does not apply to local building code compliance. Since local building codes vary considerably, the purchaser of this product should check with a local building or plumbing contractor to insure local code compliance before installation.

This limited warranty is void if the product has been moved from its initial place of installation; if it has been subjected to faulty maintenance, abuse, misuse, accident or other damages; if it was not installed in accordance with American Standard®'s instructions; or if it has been modified in a manner inconsistent with the product as shipped by American Standard®.

American Standard®'s option to repair or exchange the product under this limited warranty does not cover any labor or other costs of removal or installation. IN NO EVENT WILL AMERICAN STANDARD® BE LIABLE FOR THE COST OF REPAIR OR REPLACEMENT OF ANY INSTALLATION MATERIALS, INCLUDING BUT NOT LIMITED TO, TILES, MARBLE, ETC. American Standard® will not be responsible for any other incidental or consequential damages attributable to a product defect or to the repair or exchange of a defective product, all of which are expressly excluded from this limited warranty. This limited warranty does not cover any liability for consequential or incidental damages, all of which are hereby expressly disclaimed, or the extension beyond the duration of this limited warranty of any implied limited warranties, including those of merchantability or fitness for an intended purpose. (Some states or provinces do not allow the exclusion or limitation of implied limited warranties, so this exclusion may not apply to you.)

This limited warranty gives you specific legal rights. You may have other statutory rights that vary from state to state or from province to province, in which case this limited warranty does not affect such statutory rights.

AS AMERICA, INC. LIMITED WARRANTY FOR CHAMPION® PRO AND CHAMPION®4 TOILETS

This toilet comes with a limited lifetime warranty on chinaware, a limited 10 year warranty on all mechanical parts of the toilet and a limited 1 year warranty on the toilet seat if included with product. If inspection of this AS America, Inc. ("American Standard®") plumbing product, inclusive of the chinaware and all mechanical parts, confirms that it is defective in materials or workmanship, American Standard® will repair or, at its option, exchange the product for the same or a similar model.

This limited warranty applies only to the original non-commercial purchaser and installation of the products. In the event of a limited warranty claim, proof of purchase will be required – **save sales receipt.**

For this warranty to become effective, the warranty registration process must be completed via the internet or telephone per the warranty registration instructions.

This limited warranty does not apply to commercial installations. The warranty for commercial installations is 1 year on chinaware and mechanical parts and 1 year on the toilet seat if included with product.

This warranty **does not apply** to local building code compliance. Since local building codes vary considerably, the purchaser of the product should check with a local building or plumbing contractor to ensure local code compliance before installation.

This warranty **will be void** if the product has been moved from its initial place of installation; if it has been subjected to faulty maintenance, abuse, misuse, accident or other damage; if it was not installed in accordance with American Standard®'s instructions; or if it has been modified in a manner inconsistent with the product as shipped by American Standard®.

WARNING: This warranty **DOES NOT COVER** any damages caused by the use of in-tank cleaners. These products can seriously corrode the fittings in the tank. This damage can cause leakage and property damage. **American Standard® will not be responsible or liable for any damage caused by the use of in-tank cleaners.**

American Standard®'s option to repair or exchange the product under this warranty does not cover any labor or other costs of removal or installation including any costs of any surrounding material such as tile or marble. **American Standard® is not responsible for any other incidental or consequential damages attributed to a product defect or to the repair or exchange of a defective product, all of which are expressly excluded from this warranty.** (Some states or provinces do not allow the exclusion or limitation of implied warranties, so this exclusion may not apply to you.)

This warranty gives you specific rights. You may have other statutory rights that may vary from state to state or province to province, in which case this warranty does not affect such statutory rights.