DRAWING NO.
AL 90720

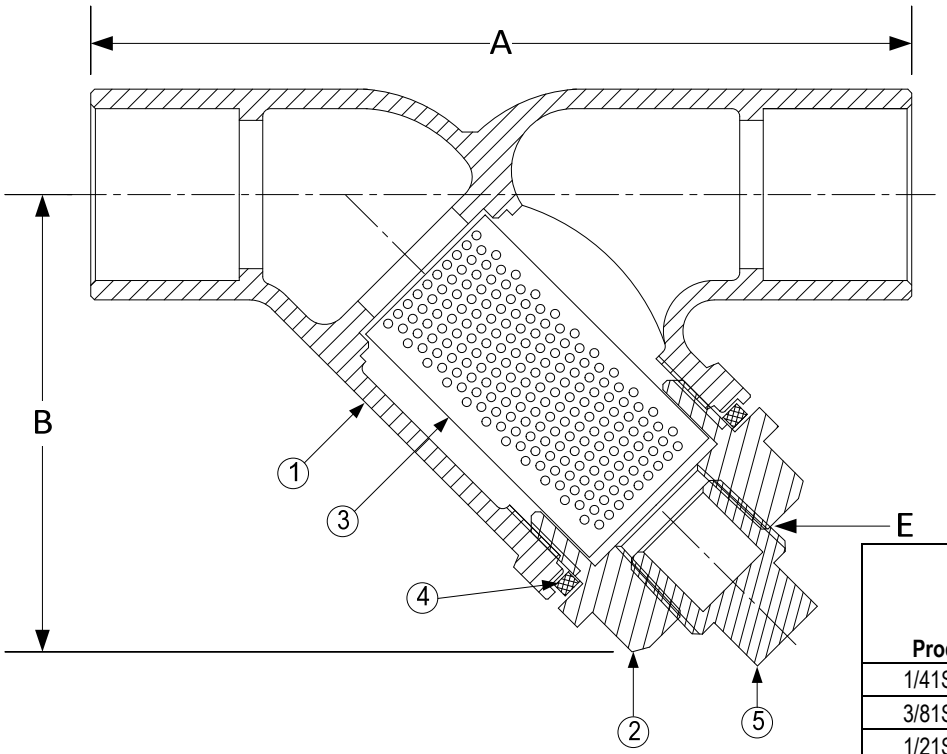

PRESSURE & TEMPERATURE RATINGS – NON SHOCK		
NOM. RATING	**MEDIA**	**1/4" to 3"**
CLASS 125	STEAM	125 PSI @ 400°F
	W.O.G.	200 PSI @ 150°F

PARTS LIST		
ITEM	**DESCRIPTION**	**MATERIAL**
1	BODY	BRONZE (ASTM B 584, C89833)
2	CAP	BRONZE (ASTM B 584, C89833)
3	SCREEN	STAINLESS STEEL (304)
4	GASKET	PTFE
5	PLUG	BRONZE (ASTM B 584, C89833)

*The wetted surface of this product contacted by consumable water contains less than 0.25% of lead by weight.

Product Numbers†	SIZE	DIMENSIONS (in)			WEIGHT (lbs)
		A	B	E	
1/41SJY-LFM20M34-PTI	1/4	2-1/16	1-3/8	1/8	0.20
3/81SJY-LFM20M34-PTI	3/8	3-1/8	1-13/16	1/4	0.46
1/21SJY-LFM20M34-PTI	1/2	3-1/8	1-15/16	1/4	0.48
3/41SJY-LFM20M34-PTI	3/4	4-1/8	2-5/16	3/8	0.86
11SJY-LFM20M34-PTI	1	4-15/16	2-5/8	1/2	1.25
11/41SJY-LFM20M34-PTI	1-1/4	5-11/16	3-1/4	1/2	2.06
11/21SJY-LFM20M34-PTI	1-1/2	6-5/8	3-11/16	3/4	2.93
21SJY-LFM20M34-PTI	2	8-1/4	4-1/2	1	5.48
21/21SJY-LF045P34-PTI	2-1/2	9-3/4	5-3/8	1-1/4	10.16
31SJY-LF045P34-PTI	3	11-3/8	6-1/8	1-1/4	14.30

†See ***"Style E7 Product Number Configuration"*** for additional options.
Face to face values tolerance in compliance with ASME B16.18.

STANDARD SCREENS SUPPLIED

SIZE	SCREEN PERFORATION			
	FOR LIQUID	OPEN AREA	FOR STEAM	OPEN AREA
in	in		in	
1/4 to 2	20 MESH STAINLESS STEEL			49%
2-1/2 to 3	3/64	33%	3/64"	33%

Standard screens supplied are for **liquid service**, unless otherwise specified.
Options: Other meshes, perforations, and screen materials are available.

KECKLEY
3400 CLEVELAND SKOKIE ILLINOIS

DRAWING NO.
AL 90720

DIMENSIONAL ASSEMBLY

PART NO.

¼" to 3" Class 125 Solder Joint Style E7

SCALE: NTS

For Copper Tubing (Import)

DATE: 11/24/2020

MAT'L: Cast Bronze (Lead Free) | REQ. ---

DR. BY DSF