SIGMA™

Quality – Service – Commitment – Delivered.

PV-LOK™ MODEL PWP SERRATED BELL JOINT RESTRAINT FOR AWWA C900/905 PVC PIPE

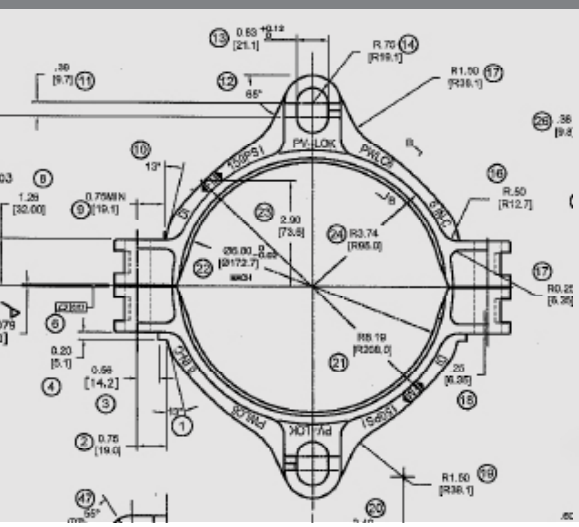

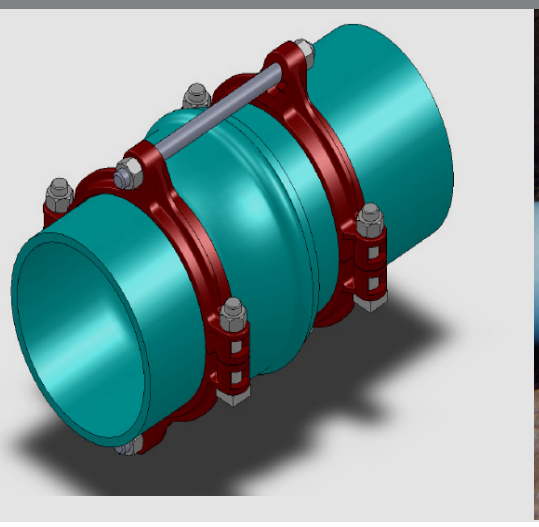

PRODUCT SPECIFICATIONS

MATERIAL:
- Machine-serrated clamping ring is manufactured of high strength ductile iron in accordance with ASTM A536, Grade 65-45-12.
- Side clamping bolts and hex nuts are manufactured of high strength steel in accordance with ASTM A449 and zinc-plated to B663, Type III Sec.1 for corrosion resistance.

SIZE RANGE:
- 4” through 48”

DIMENSION:
- Conform to ANSI/AWWA C900/905 standards

PRESSURE RATINGS:
- Equal to the water working pressure rating of the pipe upon which it is installed with a minimum 2:1 factor of safety.

COATING:
- Red Alkyd paint
- Electro-deposition “CORRSAFE™” available upon request. For further information, please refer to our CORRSAFE Product Information sheet at http://www.sigmaco.com/pipe-restraint-product coatings-linings/

APPROVALS:
- Factory Mutual approved in sizes 4”, 6”, 8” & 10”

DEFLECTION:
- Maintains the allowable nominal deflection within the PVC pipe manufacturer recommendation for AWWA C900/905 PVC pipe bells.

TRACEABILITY:
- Machine-serrated clamping rings are individually cast with exact heat code information.

INSTALLATION:
- In accordance with manufacturer’s recommendation and applicable AWWA standards.

SIGMA™

Quality – Service – Commitment – Delivered.

PV-LOK™ Series PWP for Bell Joint Restraint (CIOD)

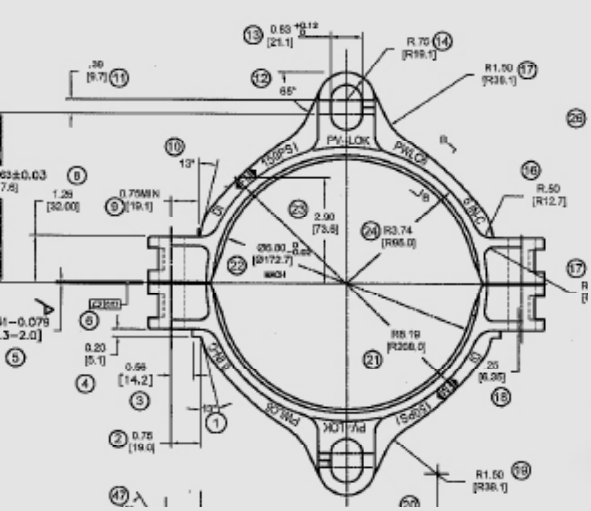

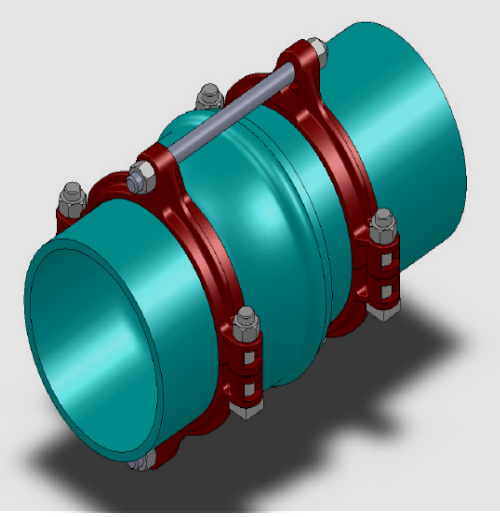

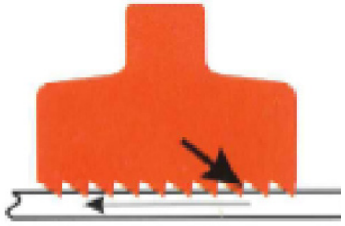

Cross Section of PV-LOK illustrates directional grip of serrations to maximize restraint of PVC pipe

UNI-B-13-94

FM APPROVED

Features & Advantages:

The PV-LOK™ Series PWP restrainer incorporates a series of machined serrations that effectively engage PVC pipe walls, to provide positive joint security and full support of the pipe. The directional gripping action maximizes restraint during increased line pressures such as those resulting from surges and water hammers. The Series PWP incorporates two PV-LOK clamping rings and a series of restraining rods & nuts that tie the two rings together and secure the PVC bell and spigot pipe joint.

Sample Specification:

Restraint devices for bell and spigot joints of PVC pipe shall consist of two split retainer rings incorporated a series of machined (not “as cast”) serrations. One clamping ring shall be installed on the spigot pipe, and with the necessary restraining rods and nuts, connected to a second clamping ring located on the pipe barrel immediately behind the gasket bell. Restraint devices shall incorporate a series of machined serrations that provide positive restraint, exact fit and full support of the pipe wall. The restraint device shall provide the necessary bolts and nuts to complete the PVC pipe bell assembly. Devices shall carry a minimum 2:1 safety factor and meet or exceed the recognized testing for restrained joints on PVC pressure pipe and offer factory certification and independent test results. Restraint devices for securing PVC pipe bell assemblies shall be SIGMA PV-LOK™ Series PWP or approved equal.

Material:

- Clamping ring is manufactured of high strength ductile iron in accordance with ASTM A536, grade 65-45-12.
- Side clamping bolt and hex nuts are high strength steel in accordance with ASTM A449 and zinc plated to B633, Type III Sc.1 for corrosion resistance.
- Restraining rods and hex nuts are of high strength, low alloy steel in accordance with AWWA/ANSI C111/A21.11 and provide a minimum 45,000 psi yield and 60,000 psi tensile strength.

SIGMA Corporation

700 Goldman Drive
Cream Ridge, NJ 08514

800 999 2550 p
609 758 1163 f
crm-sales@sigmaco.com

www.sigmaco.com

PV-LOK™ Series PWP for Bell Joint Restraint (CIOD)

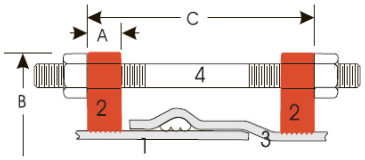

1. Plain End Pipe
2. Restrainer Clamp
3. Bell End Pipe
4. Restraining Rod

Dimensions in Inches, Weights in Pounds:

Pipe Size	Item #	PVC pipe w DI Pipe OD	A	B	C (max)	Restraining Rods		Nuts for Res Rods		Clamping Bolts			Weight
						No.	Size	No.	Size	No.	Size	Min Torque	
4	PWP-C4	4.80	1.20	9.00	13.00	2	3/4x15	4	3/4	4	5/8x3 3/8	85	14.36
6	PWP-C6	6.90	1.20	11.52	13.00	2	3/4x18	4	3/4	4	5/8x3 3/8	85	16.44
8	PWP-C8	9.05	1.75	12.81	13.00	2	3/4x18	4	3/4	4	3/4x3 7/8	100	27.00
10	PWP-C10	11.10	1.75	16.88	16.00	4	3/4x24	8	3/4	4	7/8x4 3/8	125	44.40
12	PWP-C12	13.20	1.75	19.12	22.00	4	3/4x24	8	3/4	4	7/8x4 3/8	125	50.64
14	PWP-C14	15.30	3.50	21.10	22.00	6	3/4x30	12	3/4	8	7/8x6 1/4	130	101.61
16	PWP-C16	17.40	3.50	23.58	22.00	6	3/4x30	12	3/4	8	7/8x6 1/4	130	114.15
18	PWP-C18	19.50	4.25	25.80	22.00	8	3/4x30	16	3/4	8	1.00x6 1/4	130	164.97
20	PWP-C20	21.60	5.00	29.06	22.00	8	3/4x36	16	3/4	8	1-1/4x6-1/2	130	234.50
24	PWP-C24	25.80	5.00	34.64	22.00	10	3/4x36	20	3/4	8	1-1/4x6-1/2	130	288.50
30	PWP-C30	32.00	5.50	41.80	38.00	10	1x40	20	1	8	1-1/4x8-1/2	130	463.75
36	PWP-C36	38.30	5.50	49.04	38.00	12	1x40	24	1	8	1-1/4x8-1/2	130	520.40
42	PWP-C42	44.50	6.26	57.18	46.00	16	1 1/4x48	32	1 1/4	8	1 1/2x9	175	983.76
48	PWP-C48	50.80	6.26	63.48	46.00	16	1 1/4x48	32	1 1/4	24	1 1/2x9	175	1058.50

PV-LOK Products are rated with a working pressure equal to that of the PVC pipe to which they are applied.
Also suitable for use on ductile iron pipe in sizes 4-12" (350psi 4-6", 250psi 8-12")
**When calculating clearance for pipe in a casing, add a minimum of 1-1/2" to the "B" dimension above.*

Pressure Rating:

Nominal Pipe Size	Item #	Pressure Rating											
		C900			ASTM D2241			C905					
		DR14	DR18	DR25	SDR17	SDR21	SDR26	DR18	DR21	DR25	DR32.5	DR41	DR51
4	PWP-C4	305	235	165	250	200	160	-	-	-	-	-	-
6	PWP-C6	305	235	165	250	200	160	-	-	-	-	-	-
8	PWP-C8	305	235	165	250	200	160	-	-	-	-	-	-
10	PWP-C10	305	235	165	250	200	160	-	-	-	-	-	-
12	PWP-C12	305	235	165	250	200	160	-	-	-	-	-	-
14	PWP-C14	-	-	-	-	-	-	235	200	165	125	100	-
16	PWP-C16	-	-	-	-	-	-	235	200	165	125	100	-
18	PWP-C18							235	200	165	125	100	80
20	PWP-C20	-	-	-	-	-	-	235	200	165	125	100	80
24	PWP-C24	-	-	-	-	-	-	235	200	165	125	100	80
30	PWP-C30	-	-	-	-	-	-	-	-	165	125	100	80
36	PWP-C36	-	-	-	-	-	-	-	-	165	125	100	80
42	PWP-C42										125	100	80
48	PWP-C48										125	100	80

UNI-B-13-94

FM APPROVED

UL LISTED

Installation Instructions (4-12”):

1. Assemble plain-end PVC pipe into bell according to pipe manufacturer’s recommendations.

2. Assemble the Series PWP clamping rings on the spigot pipe (approx. 2 inches behind the insertion mark on the pipe) and immediately behind the pipe bell end, making sure the protrusions on the restrainer ears face toward each other to insure proper direction of the angled serrations. Tighten the side clamping bolts to recommended torque.

3. Insert the restrainer rods provided and snug the retaining nuts against the restrainer ears (against the flat surface). Do not over-tighten retaining nuts, approximately one turn with a wrench.

Installation Instructions (14-48”):

1. Assemble pipe bell joint to pipe manufacturer’s recommendations.

2. Assemble the Series PWP clamping rings on the spigot pipe approximately two inches behind the insertion mark on the pipe and immediately behind the pipe bell end. Tighten the side clamping bolts evenly to recommended torque – you should expect ¼” to ½” gap on each side of the restrainer. The flat side of the restrainer ear should face away from the fitting to insure proper direction of the angled serrations.

3. Connect the two Series PWP restrainers using the restrainer rods that are provided. Place a washer behind each restrainer ear and snug all of the retainer nuts. Do not over-tighten retainer nuts, approximately one turn with a wrench.

LOCATIONS

Northeast Region
Cream Ridge, New Jersey (HQ)
700 Goldman Drive
Cream Ridge, NJ 08514
Phone (800) 999-2550
Fax (609) 758-1158
crmcsr@sigmaco.com

REPCO
970 DE LA Bastican
Victoriaville, Quebec G6T 1Y2
Phone (888) 744-6262
Fax (819) 758-1153
jboucher@repco.ca

Concord Supply
2353 Bowman Street
Innisfil, Ontario L9S 3V6
Phone (877) 436-3800
Fax (705) 436-6338
tanya@concordsupply.ca

Midwest Region
Sauk Village, Illinois
21699 Torrence Avenue
Sauk Village, IL 60411
Phone (888) 999-0420
Fax (708) 758-6790
chicsr@sigmaco.com

Southeast Region
Alexander City, Alabama
1500 Highway 22 W
Alexander City, AL 35010
Phone (800) 824-4513
Fax (256) 234-4956
alxcsr@sigmaco.com

Southwest Region
Houston, Texas
5000 Askins Lane
Houston, TX 77093
Phone (800) 999-0109
Fax (281) 987-0200
htncsr@sigmaco.com

Western Region
Ontario, California
4652 E. Guasti Road
Ontario, CA 91761
Phone (800) 688-6230
Fax (909) 391-2033
ontcsr@sigmaco.com

Auburn, Washington (Branch)
902 W Main Street
Auburn, WA 98001
Phone (800) 688-6230
Fax (909) 391-2033
ontcsr@sigmaco.com

www.sigmaco.com

Terms and Conditions of Sales available at our website.

AWWA Ductile Iron Fittings

- 2-64” C153 Ductile Iron Mechanical Joint Fittings
- 2-48” C110 Ductile Iron Mechanical Joint Fittings
- 2-64” C110 Ductile Iron Flanged Fittings
- 3-24” C153 Ductile Iron Push-On Fittings
- 4-24” C110 Ductile Iron Push-On Fittings
- 4-12” Ductile Iron Mechanical Joint Connector
- C116 Fusion Bonded Epoxy Lining Avaiable
- PROTECTO 401® Ceramic Epoxy Lining Available

Visit our website for available special coatings. http://www.sigmaco.com/fittings-coatings-linings/

Mechanical Joint Accessories

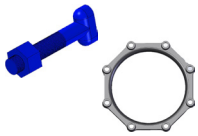

- Prepackaged and Loose Mechanical Joint Accessories
- SIGMASEAL™ Improved Mechanical Joint Gasket
- Snap-On Multi-Purpose Gasket for Ductile Iron or PVC Pressure Pipes
- OMNI-SLEEVE™ Improved Wall Penetration Sleeve
- Specialty Bolts and Nuts for Mechanical Joint Assemblies

ONE-LOK™ Wedge Action Restraints

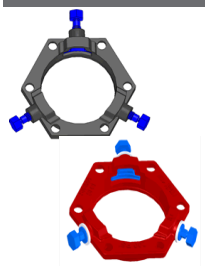

- 3-48” ONE-LOK D-SLDE Domestic Wedge Restraint for Ductile Iron Pipe
- 3-64” ONE-LOK SLDE Wedge Restraint for Ductile Iron Pipe (Import)
- 4-48” ONE-LOK T-SLDE Tandem Wedge Restraint for High Pressure Ductile Iron Pipe
- 3-36” ONE-LOK D-SLCE Domestic Wedge Restraint for PVC Pipe
- 3-36” ONE-LOK SLCE Wedge Restraint for PVC Pipe (Import)
- 3-36” ONE-LOK SLDEH Wedge Harness Restraint for Ductile Iron Pipe
- 4-12” / 20” ONE-LOK SLDM Wedge Restraint for Oversized Cast Iron Pipe
- 4-36” ONE-LOK SSLD Split Wedge Restraint for Installed Ductile Iron Pipe & Fitting
- 4-36” ONE-LOK SSLDH Split Wedge Harness Restraint for Installed Ductile Iron Pipe
- 4-12” ONE-LOK SLCEH Wedge Harness Restraint for AWWA C900 PVC Pipe

Visit our website for available special coatings.
http://www.sigmaco.com/pipe-restraint-product-coatings-linings/

PV-LOK™ Serration Lock Restraints

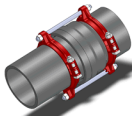

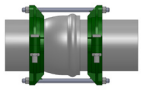

- 4-48” PV-LOK PWM Serrated Restraint for Ductile Iron Fitting & AWWA C900/905 PVC Pipe
- 4-48” PV-LOK PWP Serrated Bell Joint Restraint for AWWA C900/905 PVC Pipe
- 4-12” PV-LOK D-PWP Domestic Serrated Bell Joint Restraint for AWWA C900 PVC Pipe
- 4-48” PV-LOK PWPF Restraint for AWWA C900/905 PVC Pipe & PVC Fitting
- 4-12” PV-LOK PWH Serrated Harness Restraint for AWWA C900 PVC Pipe
- 2-12” PV-LOK PVM Serrated Restraint for Ductile Iron & IPS OD PVC pipe
- 2-12” PV-LOK PVP Serrated Bell Joint Restraint for IPS OD PVC Pipe
- 4-8” PV-LOK PVPF Serrated Restraint for IPS OD PVC Pipe & PVC Fitting
- 4-12” PV-LOK PWP Serrated Bell Joint Restraint for Ductile Iron Pipe

Visit our website for available special coatings.
http://www.sigmaco.com/pipe-restraint-product-coatings-linings/

Flange Adapters

- 3-36” SIGMAFLANGE Flange Adapter Sleeve for PVC and Ductile Iron Pipe
- 2-48” ZIP FLANGE Set Screw Style Flange Adapter

Municipal Construction Castings

- Manhole Rings and Covers
- Curb and Meter Boxes
- Frames and Grates
- Storm Inlets
- Valve Boxes, Risers, and Extensions

Products for the Ductile Iron Fabricator

- 3-64” High Hub Threaded Flanges
- 3-48” Tapped High Hub Threaded Flanges
- 3-36” Extra Heavy 250lb Drilled Threaded Flanges
- 3-48” Threaded MJ Bell Adapters
- 3-48” MJ x PE Bell adapter
- 3-48” Anchor Flanges
- 3-16” Filler Flanges

Extended Range Products

- Flange-Pak™ Prepackaged Flange Accessory Sets
- Polyethylene Encasement for Ductile Iron Pipe
- Copper Tubing Products
- Tracer Wire & Detectable/Non-Detectable Marking Tape
- Pipe Joint Lubricant & Hydraulic Cement
- Socket Clamps and Tie Rod Accessories
- BoxLok Valve Box Alignment Device
- Cast Iron Companion Flanges

TRIM-TYTON and TYTON are registered trademarks of the United States Pipe and Foundry Company • PROTECTO 401 is a registered trademark of Induron, Inc.

© February 2016 SIGMA Corporation All rights reserved.