San Souci® | K-5172-RA

One-piece compact elongated toilet with concealed trapway, 1.28 gpf

Features

- One-piece toilets integrate the tank and bowl into a seamless, easy-to-clean design
- Compact elongated bowl offers added comfort while occupying the same space as a round-front bowl
- Low-profile design
- Comfort Height® feature offers chair-height seating that makes sitting down and standing up easier for most adults
- 1.28 gpf (4.8 lpf)
- Concealed trapway and Clean Caps® low-profile bolt caps facilitate easier cleaning and enhance design
- Includes Reveal® Quiet-Close™ seat
- Right-hand Polished Chrome trip lever
- Easy-to-flush canister design requires less force to actuate than a 3" (76 mm) flapper, and has 90% less exposed seal material which resists conditions that cause wear, tear, shrinkage and swelling
- Eligible for consumer rebates in some municipalities
- Quiet-Close™ compact elongated lid and seat prevents slamming
- 2-1/8" (54 mm) fully glazed trapway



Sustainability

Available Colors/Finishes

Color tiles intended for reference only.

	0	White
	96	Biscuit

1-800-4KOHLER (1-800-456-4537)
Kohler Co. reserves the right to make revisions without notice to product specifications.
For the most current specification sheet, go to www.kohler.com USA or www.kohler.ca Canada.
5-30-2026 3:2 - US-CA

THE BOLD LOOK OF KOHLER®

Codes/Standards

ADA, OBC, CSA B651 compliant when installed to the specific requirements of these regulations.
Accessibility standards may require controls to be located on the open side of the toilet.
Plumbing codes may require elongated toilets and elongated, open-front seats in public bathrooms.

ADA CSA B651 OBC

ASME A112.19.2/CSA B45.1
DOE - Energy Policy Act 1992
EPA WaterSense®
California Energy Commission (CEC)
ADA
ICC/ANSI A117.1
CSA B651
OBC

Technical Information

Rough-in:	Standard 12" (305mm)
Flush Type:	AquaPiston, Class Five
Flush Rate:	1.28 gpf (4.8 lpf)
Bowl Shape:	Elongated
Seat-Mounting Holes:	5-1/2" (140 mm)
Waste Outlet:	Floor
Trapway Size:	2-1/8" (54 mm)
Trapway Type:	Concealed
Water Surface Size:	10-3/4" x 7-1/2" (273 mm x 191 mm)
Rim to Water Surface:	5-3/8" (137 mm)

Recommended Products/Accessories

1023457 Toilet Wax Ring And Hardware Kit

1265114 12" Toilet Supply Line

K-23726 Drain treatment

K-9171-R Trip lever

K-4108 Elongated bidet toilet seat with remote control

K-30780 Quiet-Close™ elongated toilet seat

Warranty

See website for detailed warranty information.

KOHLER® Toilets and Seats Limited Warranty

1-800-4KOHLER (1-800-456-4537)
Kohler Co. reserves the right to make revisions without notice to product specifications.
For the most current specification sheet, go to www.kohler.com USA or www.kohler.ca Canada.
5-30-2026 3:2 - US-CA

THE BOLD LOOK OF KOHLER®

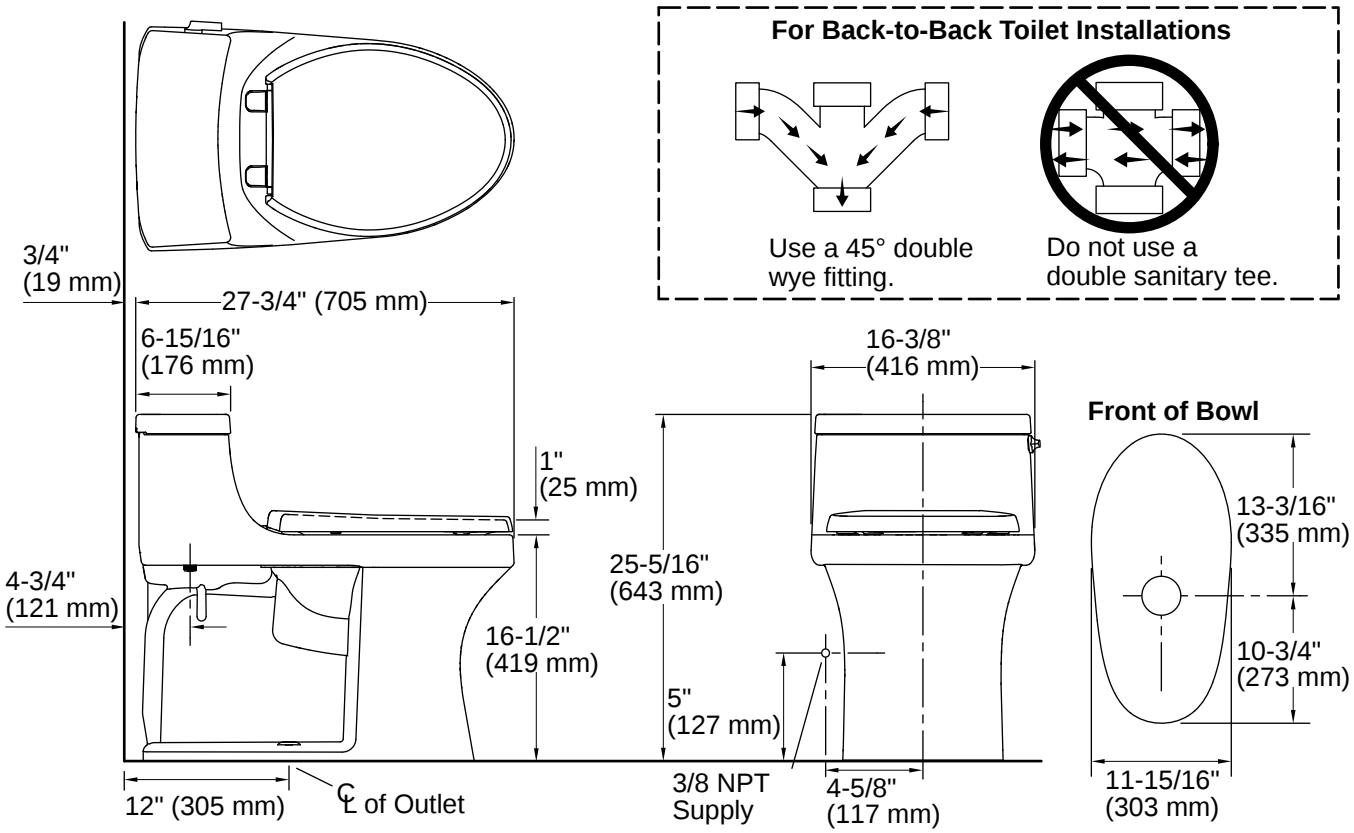

Installation

- Standard 12" (305 mm) rough-in
- Supply line sold separately

Installation Notes

Install this product according to the installation instructions.

For back-to-back toilet installations: Use only a 45° double wye fitting.
Product dimensions are nominal and may vary per ASME A112.19.2 tolerances.
ADA, OBC, CSA B651 compliant when installed to the specific requirements of these regulations.
Plumbing codes may require elongated toilets and elongated, open-front seats in public bathrooms.
Accessibility standards may require controls to be located on the open side of the toilet.

1-800-4KOHLER (1-800-456-4537)
Kohler Co. reserves the right to make revisions without notice to product specifications.
For the most current specification sheet, go to www.kohler.com USA or www.kohler.ca Canada.
5-30-2026 3:2 - US-CA

THE BOLD LOOK OF KOHLER