INSTALLATION & OPERATION MANUAL

SUBMERSIBLE SEWAGE PUMPS

Model:

PF93781, PF93782 ✓



Safety Guidelines

Carefully read, understand and follow all safety instructions in this manual.

This is the safety alert symbol. When you see this symbol, look for one of the following signal words.

⚠ DANGER Indicates a hazardous situation which, if not avoided, will result in death or serious injury.

⚠ CAUTION Indicates a hazardous situation which, if not avoided, could result in death or serious injury.

⚠ WARNING Indicates a hazardous situation which, if not avoided, could result in minor or moderate injury.

Safety Information

Read these warnings carefully. Know the application and limitations of this pump. Failure to follow these warnings could result in serious bodily injury and/or property damage.

⚠ DANGER RISK OF ELECTRICAL SHOCK. Disconnect and lockout power supply before removing old pump or installing or servicing this pump.

⚠ DANGER RISK OF ELECTRICAL SHOCK. This pump is supplied with a grounding conductor and grounding type attachment plug. To reduce the risk of electric shock, be certain that it is connected only to a properly grounded, grounding type receptacle. For added safety, it is highly recommended to connect this pump to a GFCI (Ground Fault Circuit Interrupter) outlet. Connect only to a receptacle that is adequately rated for the voltage and amperage of this pump

⚠ WARNING The installation of this pump must be in accordance with the National Electric Code (NEC), Uniform Plumbing Code (UPC), International Plumbing Code (IPC) as well as all applicable local codes and ordinances.

⚠ CAUTION Do not install this pump in any location classified as hazardous by the National Electrical Code, ANSI/NFPA70.

⚠ CAUTION Do not use this pump to pump flammable or explosive fluids such as gasoline, kerosene, etc. Do not use this pump in flammable or explosive environments. Use only with liquids compatible with pump component materials.

⚠ WARNING RISK OF ELECTRICAL SHOCK. This pump has not been investigated for use in swimming pool or marine areas.

⚠ WARNING Sewage pumps handle materials that can cause illness or disease. Wear protective clothing when installing or servicing a pump in an existing installation.

⚠ WARNING RISK OF ELECTRICAL SHOCK. **DO NOT** use the power cord to remove or lower the pump into the basin. The cord may pull apart exposing bare wires which could cause a fire or electrical shock. Use the handle supplied with the pump for installing and removing the pump from the basin.

⚠ WARNING Do not run the pump dry. This pump relies on water for cooling. Running the pump dry can cause the pump to overheat and the possibility of burns to anyone that handles the pump. Running the pump dry will void the warranty.

Safety Information (continued)

⚠ WARNING If entry into a septic basin is necessary use proper OSHA safety procedures. Do not enter the basin until those procedures are adhered to.

⚠ WARNING Do not use this pump for potable/drinking water. Use only in applications for which the pump is designed for.

⚠ DANGER TO PREVENT RISK OF EXPLOSIOIN. Do not smoke, use flames or electrical devices that could emit sparks in a septic/sewage environment as sewage/septic fumes could be explosive.

⚠ WARNING According to the state of California (Prop 65), this product contains chemicals known to the state of California to cause cancer and birth defects or other reproductive harm.

⚠ WARNING DO NOT UNDER ANY CIRCUMSTANCES REMOVE THE GROUND PIN. The 3-prong plug must be inserted into a mating 3-prong grounded receptacle. If the installation does not have such a receptacle, it must be changed to the proper type, wired and grounded in accordance with the National Electrical Code and all applicable local codes and ordinances.

⚠ WARNING All wiring must be performed by a qualified electrician.

⚠ WARNING Keep hands clear of suction & discharge openings. To prevent injury, never insert fingers into pump while it is plugged in.

⚠ CAUTION This pump motor is equipped with an automatic resetting thermal protector and may restart unexpectedly.

Description

This Sewage pump is designed to remove waste water from residential & light commercial buildings to a septic or sewer line. This pump can handle spherical solids up to 2" diameter and includes a float switch for automatic operation. It is equipped with a 15' - 3 prong grounding type power cord.

Specifications

Model	PF93781	PF93782
HP	1/2	1/2
Volts	120 volt AC	120 volt AC
Amps	12 Amps	12 Amps
Hz	60 Hz	60 Hz
Phase	1	1
Discharge Size	2″ FNPT	2″ FNPT
Max. Solids Handling	2″ Spherical	2″ Spherical
Liquid Temperature Range	32°F - 120°F	32°F - 120°F
Float Switch Type	Tethered	Vertical
Switch on Level	16″	10″
Switch off Level	8″	5″
Cord Length	10′	10′
Pump Housing Construction	Stainless Steel	Stainless Steel
Pump Base Construction	Cast Iron	Cast Iron
Impeller	Stainless steel vortex	Stainless steel vortex
Motor Shaft	Stainless Steel	Stainless Steel
Fasteners	Stainless Steel	Stainless Steel
Shaft Seal	Carbon/Ceramic/Stainless Steel	Carbon/Ceramic/Stainless Steel
Shut off head	31 Feet	31 Feet

Dimensions

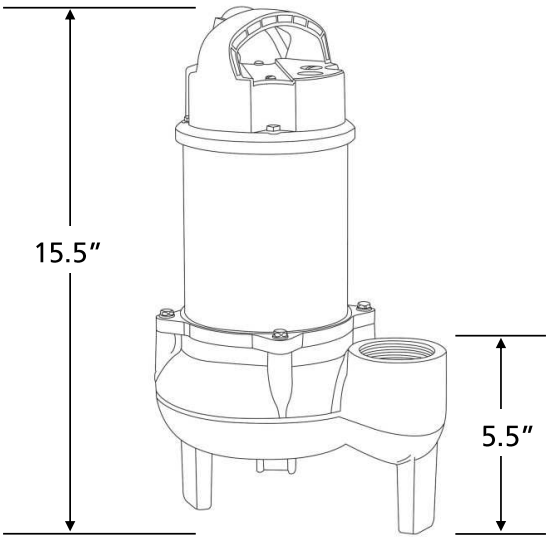

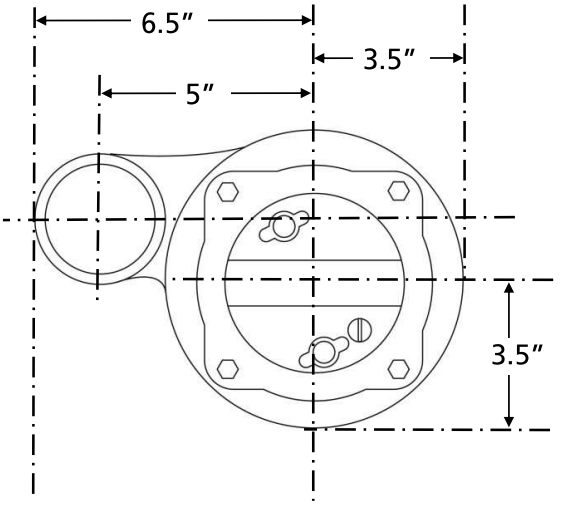

Installation

Basin Installation (If Required)

1. Dig a hole for the basin (if necessary). The hole should be approximately 24" larger in diameter and 12" deeper than the basin size to provide adequate room for backfill. Backfill and sub-base should be 1/4" to 3/4" pea gravel or crushed stone and should be at least 4" deep.

Pump Installation

1. Place the pump in the basin on a solid level surface. Do not place the pump directly in mud, sand, silt or gravel as these materials can clog or cause damage the pump.
2. Position the pump in the basin ensuring that there is at least 1" of clearance from the float switch to the side of the basin and is free from any possible obstructions. The pump should be positioned so the float switch is away from the incoming water.
3. Install discharge piping according to local and state codes. The pipe size should be the same size as the pump discharge. Do not reduce the pipe size below 2". In some installations, it may be necessary to increase the pipe size to reduce friction losses.
4. Drill a 3/16" weep hole (also called an anti-airlock hole) in the discharge pipe approximately 1"-2" above the pump discharge. The hole must be below the check valve and below the basin cover. A water stream will be visible from this hole when the pump is running. This hole should be cleaned periodically.

Typical Installation

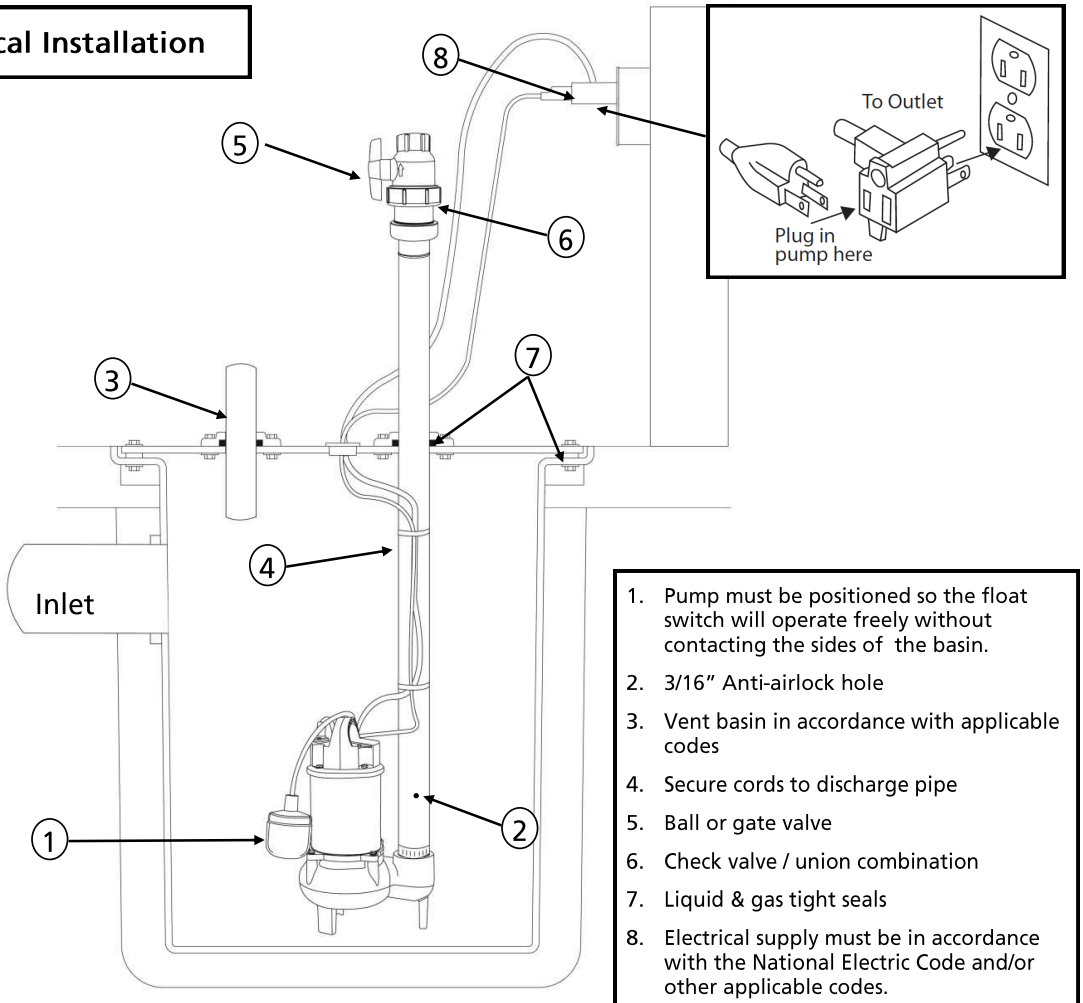

1. Pump must be positioned so the float switch will operate freely without contacting the sides of the basin.
2. 3/16" Anti-airlock hole
3. Vent basin in accordance with applicable codes
4. Secure cords to discharge pipe
5. Ball or gate valve
6. Check valve / union combination
7. Liquid & gas tight seals
8. Electrical supply must be in accordance with the National Electric Code and/or other applicable codes.

Installation (Continued)

5. Install a check valve/union combination above the basin cover to allow easy removal of the pump for cleaning or repair. It is also highly recommended to install a gate or ball valve above the check valve to prevent backflow of sewage when servicing the pump.
6. Connect the remaining discharge pipe using the shortest length of pipe and fewest number of turns as possible.
7. Vent the basin in accordance with local and state codes. Venting is required as it removes potentially harmful gasses and odors from the basin.
8. Secure the power cord(s) to the discharge pipe using cable clamps or zip ties to prevent possible entanglement with the float switch.
9. The basin and basin cover must use gas tight seals to prevent harmful gasses from escaping.

Operation

1. Plug the piggy-back plug of the float switch into a 120 volt grounded outlet. The use of a GFCI is strongly recommended. Plug the pump plug into the back of the piggy-back float switch plug.
2. Test your installation by filling the basin with water. Observe the float switch through at least one complete cycle to ensure it operates freely and does not contact the sides of the basin. If necessary, adjust the tether length of the float or pump position to ensure proper operation.
3. Do not let the pump run dry. The pump depends on water for cooling and lubrication. Operating the pump without water may cause the motor to overheat or cause damage to internal parts. It may also shorten the life of your pump.
4. Your pump motor is thermally protected. It is not recommended for pumping liquids over 120°F (49°C). The thermal overload protector will automatically shut down the pump in an overheat situation. The pump will reset itself once the pump cools down. This overload is designed as a safety device and it will fail after repeated use. Normal operation is for fluids between 32°F & 120°F (0°C - 49°C).
5. Install a basin cover to prevent debris from falling into the basin and to prevent accidental injury. The basin and basin cover must use gas tight seals to prevent harmful gasses from escaping.

Maintenance

⚠ CAUTION Before servicing the pump, always shut off main breaker before unplugging the pump.

⚠ WARNING All repairs must be made by an authorized service center.

⚠ CAUTION This submersible pump contains oil which may become pressurized and hot under normal operating conditions - allow the pump to cool for 2-3 hours before servicing.

1. Periodically inspect and clean the anti-airlock hole.
2. Inspect the float switch for any accumulated debris that may inhibit it from operating properly. Clean if necessary.
3. The pump has sealed, permanently lubricated bearings and require no additional lubrication.
4. In applications where the pump may not activate for extended periods of time, it is recommended to cycle the pump at least once per month to ensure the pumping system is working properly when needed.

Performances

Height and/or piping restriction will reduce the pump output performance. It is recommended to use the same size or larger pipe as the pump discharge for optimum performance.

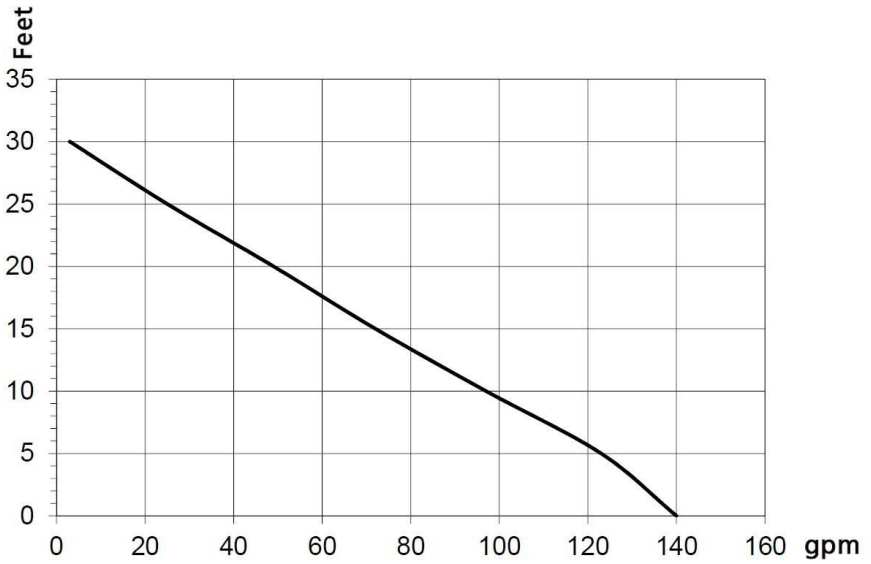

Discharge Height	0′	5′	10′	15′	20′	25′	30′
Gallons Per Minute	140	123	97	72	49	25	3

Troubleshooting

Problem	Possible Causes	How to Correct
If the pump does not start or run	Pump is not plugged in, switch or breaker is turned off	Plug pump in or turn on switch/ breaker
	Check for blown fuses or tripped circuit breakers or tripped GFCI outlets	Replace fuse, reset breaker, reset GFCI outlet
	Float switch is defective	Check and replace if necessary
	Motor thermal protector tripped	Allow pump to cool. Pump will reset automatically
	Float switch is stuck or obstructed	Remove obstruction or position pump so the float switch will operate freely
The pump starts and stops too often	Backflow of water from discharge hose/pipe	Install or replace check valve
	Float switch is defective	Replace float switch
	Fixtures are leaking	Repair fixtures to eliminate leaking
If the pump runs but moves little or no water	Clogged discharge hose/pipe	Remove clog
	Frozen discharge hose/pipe	Allow hose/pipe to thaw
	Pump is air locked	Drill a 3/16” hole 1”-2” above the pump discharge to prevent airlock. If an anti-airlock hole exists, check for clogs and clean if necessary
	Low line voltage	Check wire size and increase if necessary
	Check valve is stuck in the closed position	Inspect, repair or replace if necessary
	Check valve is installed backwards	Make sure check valve is installed in the correct direction of flow
	Worn, damaged or clogged pump parts	Inspect for wear, damage or clog and clean or replace part if necessary
	Discharge head exceeds pump capacity	See performance chart for pump limitations
Pump does not shut off	Float switch is obstructed or stuck	Remove obstruction
	Defective Float Switch	Replace float switch

Replacement Parts

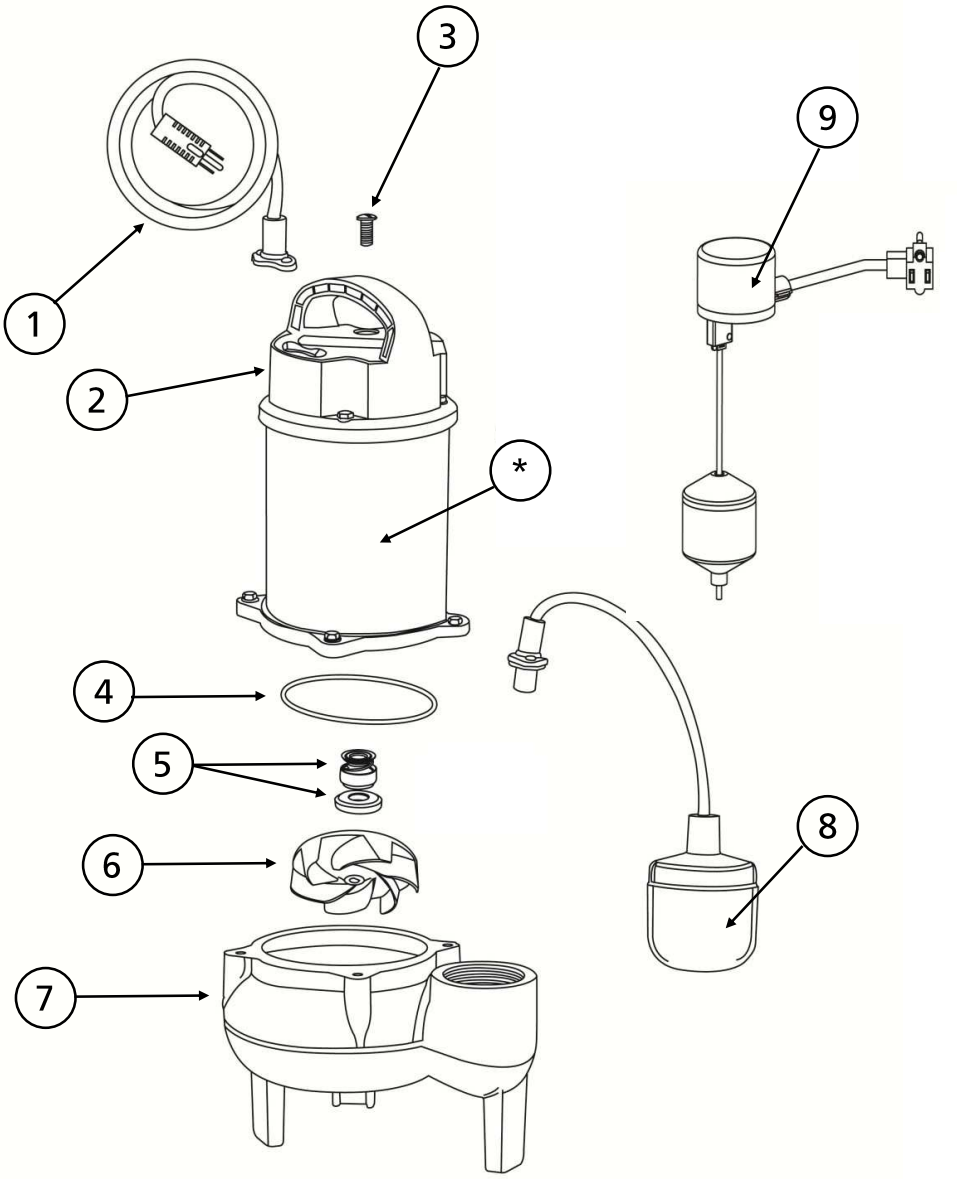

Ref#	Description	Part #
1	Power Cord	99102
2	Pump Housing Cover	99166
3	Oil Fill Screw	99056
4	O-Ring	99156
5	Shaft Seal	99157
6	Stainless Steel Vortex Impeller	99153
7	Base / Volute	99166
8	Tethered Float Switch (PF93781 only)	92000
9	Vertical Float Switch (PF93782 only)	92010

*If motor fails, replace entire pump

Notes

LIMITED WARRANTY - SEWAGE PUMPS:

Manufacturer warrants the products specified in this warranty to be free from defects in material or workmanship for three (3) years from date of purchase. During the time period and subject to the terms and conditions, the manufacturer will repair or replace to the original user or consumer any portion of this product which proves to be defective due to materials or workmanship. At all times the manufacturer shall have and possess the sole right and option to determine whether to repair or replace defective equipment, parts, or components. The manufacturer has the option to inspect any product returned under warranty to confirm that the warranty applies before repair or replacement under warranty is approved. This warranty sets forth the manufacturer's sole obligation and purchaser's exclusive remedy for defective product. Return defective product to the place of purchase for warranty consideration.

WARRANTY PERIOD - PRODUCTS:

If, within the duration of product use by the original user, this product proves to be defective due to materials or workmanship, the product shall be repaired or replaced at the manufacturer's option, subject to the terms and conditions set forth in this warranty statement. Proof of purchase is required for warranty consideration. In the absence of suitable proof of the purchase date, the effective period of this warranty is 12 months from the product's date of manufacture.

LABOR, ETC. COSTS:

The manufacturer shall IN NO EVENT be responsible or liable for the cost of field labor or other charges incurred by any customer in removing and/or affixing any product, part, or component thereof.

PRODUCT IMPROVEMENTS:

The manufacturer reserves the right to change or improve its products or any portions thereof without being obligated to provide such a change or improvement for units sold and/or shipped prior to such change or improvement.

GENERAL TERMS AND CONDITIONS:

This warranty shall not apply to damage due to acts of God, normal wear and tear, normal maintenance services and the parts used in connection with such service, lightning or conditions beyond the control of the manufacturer, nor shall it apply to products which, in the sole judgment of the manufacturer, have been subject to negligence, abuse, accident, misapplication, tampering, alteration; nor due to improper installation, operation, maintenance or storage; nor to excess of recommended maximums as set forth in the instructions. Warranty will be VOID if any of the following conditions are found:

1. Product is used for purposes other than those for which it was designed and manufactured
2. Product not installed in accordance with applicable codes, ordinances, and good trade practices
3. Product connected to voltage other than indicated on nameplate or labels
4. Pump exposed to but not limited to the following: sand, gravel, cement, grease, plaster, mud, tar, oil, gasoline, solvents or other abrasive or corrosive substances
5. Pump has been used for pumping liquids above 120°F
6. Pump allowed to operate dry (liquid supply cut off)

DISCLAIMER:

Any oral statements about the product made by the seller, the manufacturer, the representatives, or any other parties do not constitute warranties, shall not be relied upon by the user, and are not part of the contract for sale. Seller's and the manufacturers only obligation, and buyer's only remedy, shall be the replacement and/or repair by the manufacturer of the product as described above. NEITHER SELLER NOR THE MANUFACTURER SHALL BE LIABLE FOR ANY INJURY, LOSS OR DAMAGE, DIRECT, INCIDENTAL OR CONSEQUENTIAL (INCLUDING, BUT NOT LIMITED TO, INCIDENTAL OR CONSEQUENTIAL DAMAGES FOR LOST PROFITS, LOST SALES, INJURY TO PERSON OR PROPERTY, OR ANY OTHER INCIDENTAL OR CONSEQUENTIAL LOSS), ARISING OUT OF THE USE OR THE INABILITY TO USE THE PRODUCT, AND THE USER AGREES THAT NO OTHER REMEDY SHALL BE AVAILABLE TO IT. Before using, the user shall determine the suitability of the product for his/her intended use, and user assumes all risk and liability whatsoever in connection therewith.

THE WARRANTY AND REMEDY DESCRIBED IN THIS LIMITED WARRANTY IS AN EXCLUSIVE WARRANTY AND REMEDY AND IS IN LIEU OF ANY OTHER WARRANTY OR REMEDY, EXPRESSED OR IMPLIED, WHICH OTHER WARRANTIES AND REMEDIES ARE HEREBY EXPRESSLY EXCLUDED, INCLUDING BUT NOT LIMITED TO ANY IMPLIED WARRANTY OF MERCHANTABILITY OR FITNESS FOR A PARTICULAR PURPOSE, TO THE EXTENT EITHER APPLIES TO A PRODUCT SHALL BE LIMITED IN DURATION TO THE PERIODS OF THE EXPRESSED WARRANTIES GIVEN ABOVE.

Some states and countries do not allow the exclusion or limitations on how long an implied warranty lasts or the exclusion or limitation of incidental or consequential damages, so the above exclusion or limitations may not apply to you. This warranty gives you specific legal rights, and you may also have other rights which vary from state to state.


PROFLO