SPECIFICATIONS

MID-TOWN™ SINGLE HANDLE LAVATORY FAUCET

Model

D225562

Description

- Ceramic disc cartridge DA507906N
- Laminar flow 1.5 gpm maximum aerator @ 60 psi
- Metal lever handle
- Metal touch down drain assembly DA505918
- Single hole mount, 3" high spout, 5" spout length
- Optional 4" deckplate DA607568 available for 3 hole installation (sold separately)
- Optional single hole installation plate DA607569 (sold separately)

Flow Rate

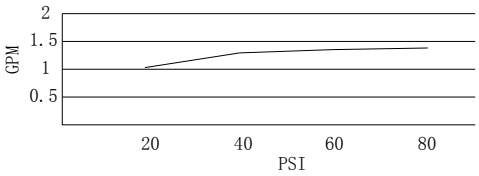

WaterSense Meets EPA Criteria

Certified by IAPMO R&T

Finishes Available

- Chrome
- Other: Refer to Price List for additional finish

Standards

NSF Certified to NSF/ANSI 61 Section 9

- NSF 61-9
- Energy Policy Act of 1992

UPC NSF/ANSI 372

- ASME A112.18.1M/A112.18.1
- NSF/ANSI 372

- ADA Accessibility Guidelines for Buildings and Facilities - 4.27.4 Controls and Mechanisms

Warranty

Danze products are covered by a manufacturer's limited "lifetime" warranty for manufacturing defects.

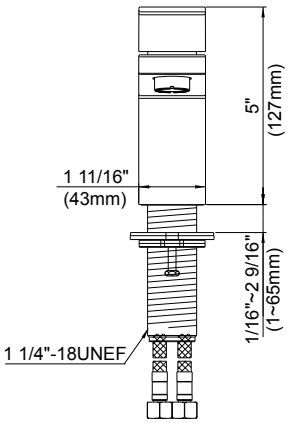

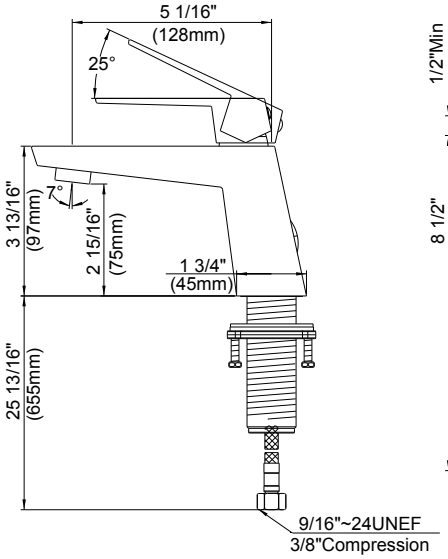

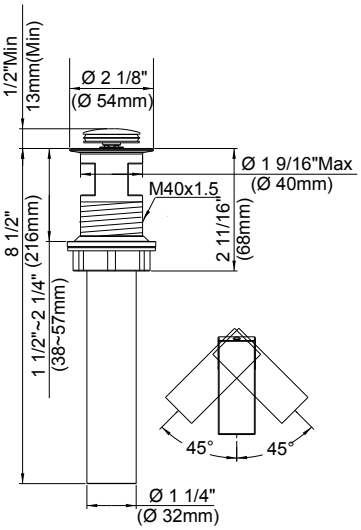

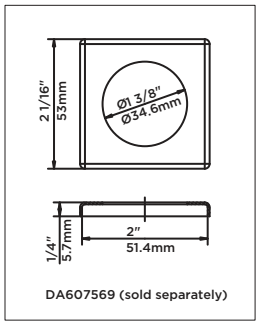

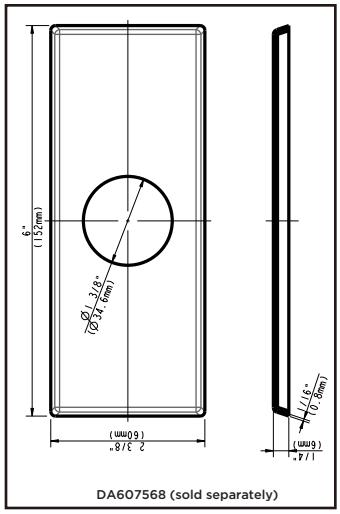

Submittal Information:

Job Name: _____ *Location:* _____

Contractor: _____ *Contact #:* _____