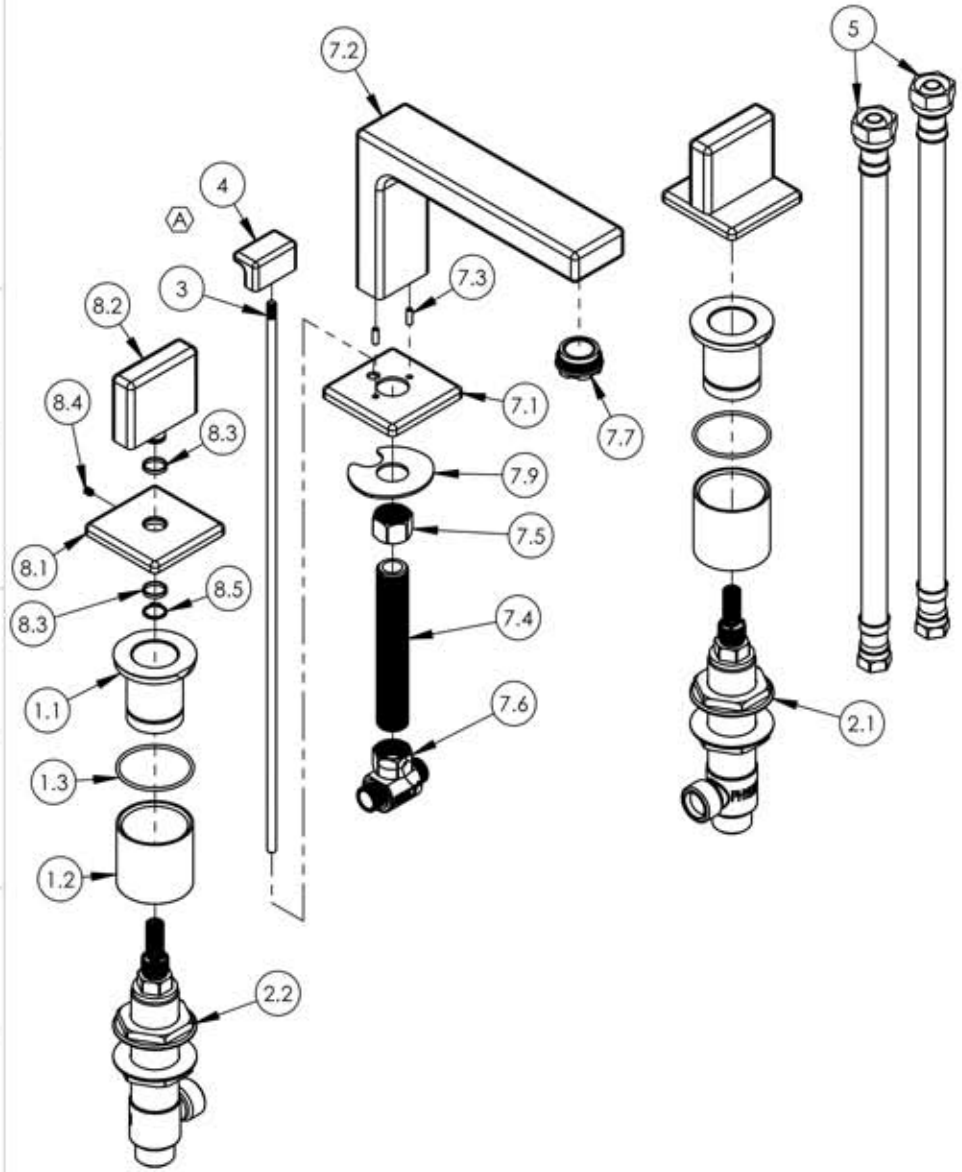


| ITEM NO. | PART NUMBER | DESCRIPTION | QTY. |
|---|---|---|---|
| 1 | 1-121 | RECESSED MOUNTING KIT, COMPLETE, WIDESPREAD LAV. | 1 |
| 1.1 | 10998 | SLEEVE MOUNT, WIDESPREAD | 2 |
| 1.2 | 92180 | EXTENSION SLEEVE, WIDESPREAD | 2 |
| 1.3 | 90029 | O-RING, 1-5/8"ID X 1-3/4"OD X 1/16"THK, AS-568-029 | 2 |
| 2 | 1-600 | WIDESPREAD HOT AND COLD VALVES W/PLASTIC NUTS | 1 |
| 2.1 | 1-109 | WIDESPREAD VALVE COLD LAV 16PT | 1 |
| 2.2 | 1-110 | WIDESPREAD VALVE HOT LAV 16PT | 1 |
| 3 | 10719/00 | POP-UP ROD, 10-24, 14" LONG | 1 |
| 4 | 10956/00 | POP-UP KNOB, MIX SERIES | 1 |
| 5 | 10982 | HOSE, 3/8" COMP. X 1/2" NPSM - 12"L | 2 |
| 6 | 3-046 | POP-UP DRAIN ASSEMBLY (2-101, 2-102) | 1 |
| 7 | 3-097/00 | ASSY, SPOUT WIDESPREAD LAV SOFT HIGH | 1 |
| 7.1 | 10933/00 | ESCUTCHEON, SPOUT LAV MIX SERIES | 1 |
| 7.2 | 10944/00 | SPOUT, WIDESPREAD LAV LOW MIX | 1 |
| 7.3 | 92158 | DOWEL PIN, 1/8" X 3/8"L | 2 |
| 7.4 | 10745 | THREAD ALL, 3/8"-18 NPSL | 1 |
| 7.5 | 10746 | NUT, 3/8"-18 NPSL | 1 |
| 7.6 | 1-112 | TEE VALVE, 3/8" NPSM X 3/8" COMPRESSION | 1 |
| 7.7 | 10560 | AERATOR, PCA CACHE 1.5GPM, M24X1.0 GREEN | 1 |
| 7.8 | 90031 | O-RING, 1-3/4"ID X 1-7/8"OD X 1/16"THK, AS-568-031 | 1 |
| 7.9 | 92174 | WASHER MOUNT WIDESPREAD (3/8") | 1 |
| 8 | 3-101/00 | ASSY, HANDLE BLADE MIX | 2 |
| 8.1 | 10932/00 | ESCUTCHEON, HANDLE MIX SERIES | 1 |
| 8.2 | 10923/00 | HANDLE, BLADE MIX SERIES | 1 |
| 8.3 | 92176 | WEAR WASHER | 2 |
| 8.4 | 92005 | SET SCREW, CUP PT 6-32UNC THREAD 3/16"L | 1 |
| 8.5 | 92177 | RETAINING RING, 7/16" SHAFT | 1 |

| ZONE | REV. | DESCRIPTION | DATE | APPROVED |
|---|---|---|---|---|
| A5 | A | -ADDED POP-UP ROD AND KNOB TO TOP ASSY. | 4/18/2016 | GRE |

REVISIONS

| NEXT ASSY | USED ON |
|---|---|
| - | - |
| - | - |
| - | - |

APPLICATION

MATERIAL

FINISH

**DO NOT SCALE DRAWING**

INTERPRET GEOMETRIC DIMENSIONING & TOLERANCING IN ACCORDANCE WITH ASME Y14.5-2009 & ASME Y14.41-2003 STANDARDS. UNLESS OTHERWISE SPECIFIED, DIMENSIONS ARE IN INCHES. TOLERANCES ARE:

**FRACTIONS** ±1/64" **DECIMALS** X.X: ±.1 X.XX: ±.01 X.XXX: ±.005 **ANGULAR** ±.5°

| | NAME | DATE |
|---|---|---|
| DRAWN | LLO | 8/5/2015 |
| CHECKED | GRE | |

# WIDESPREAD FAUCET, BLADE HANDLE, MIX SERIES

| SIZE | ASM/PRT NO. | REV |
|---|---|---|
| A | 290L-01/00 | A |

SCALE: 1:4 WEIGHT: lbs. SHEET 1 OF 2

1261 LOGAN AVENUE
COSTA MESA, CALIFORNIA 92626
PHONE: 714.361.4800
FAX: 714.617.3120

PHYLRICH®
Defining Luxury Since 1959

**PROPRIETARY AND CONFIDENTIAL**
THE INFORMATION CONTAINED IN THIS DRAWING IS THE SOLE PROPERTY OF RSS MANUFACTURING. ANY REPRODUCTION IN PART OR AS A WHOLE WITHOUT THE WRITTEN PERMISSION OF RSS MANUFACTURING IS PROHIBITED.