Pfister

Arkitek™

8" Widespread

GT49-LPMC Finish*(C)* ❑
GT49-LPMK Finish*(K)* ❑

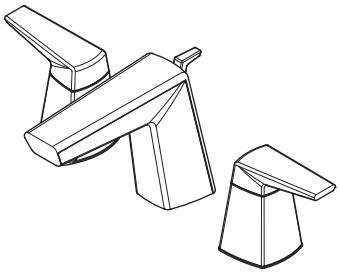

Specifications

Features

- 1.5 GPM Flow Rate
- All Metal Pop-Up
- Mounting Hardware Included
- PVD Finish (K Finish Only)
- Pforever Seal Ceramic Disc Valve
- Pforever Warranty®

Code Compliance

Pfister products are designed and manufactured in compliance with the following standards and codes:

- IAPMO Certified
- CSA B125 Certified
- ASME A112.18.1
- Cal Green Compliant
- NSF 61/9 Annex G (Low lead)
- EPA WaterSense Compliant 1.5 gpm, 5.7L/Min
- ADA Compliant-ANSI A117.1 (Lever handles only)

Dimensions

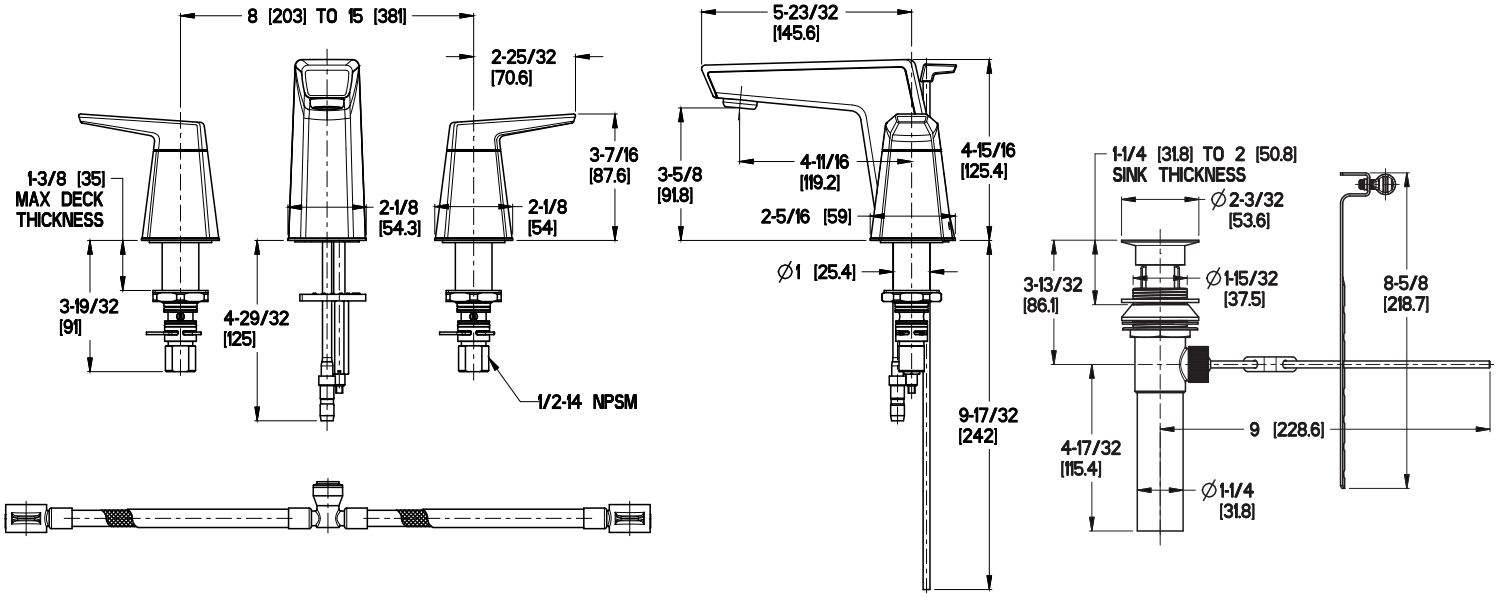

Ø1 Min to Ø1-1/2 Max. Deck Hole Openings

Copyright © 2014, Pfister Inc.