Cachet® | K-7671

Quiet-Close™ elongated toilet seat

Features

- Quiet-Close™ elongated lid and seat prevents slamming
- Grip-Tight bumpers hold seat firmly in place
- Grip-Tight installation hardware makes it easy to fasten the seat – everything is done from above the bowl
- Color-matched plastic hinges
- Fits most elongated toilets



Available Colors/Finishes

Color tiles intended for reference only.

0 White

1-800-4KOHLER (1-800-456-4537)
Kohler Co. reserves the right to make revisions without notice to product specifications.
For the most current specification sheet, go to www.kohler.com USA or www.kohler.ca Canada.
4-22-2026 11:4 - US-CA

THE BOLD LOOK OF KOHLER

Codes/Standards

Plumbing codes may require elongated toilets and elongated, open-front seats in public bathrooms.

Technical Information

All product dimensions are nominal.

Seat Shape Type:	Elongated
Seat Front Type:	Closed-front
Seat-Mounting Holes:	5-1/2" (140 mm)

Material

- Plastic construction

Warranty

See website for detailed warranty information.

KOHLER® One-Year Limited Warranty

1-800-4KOHLER (1-800-456-4537)
Kohler Co. reserves the right to make revisions without notice to product specifications.
For the most current specification sheet, go to www.kohler.com USA or www.kohler.ca Canada.
4-22-2026 11:4 - US-CA

THE BOLD LOOK OF KOHLER®

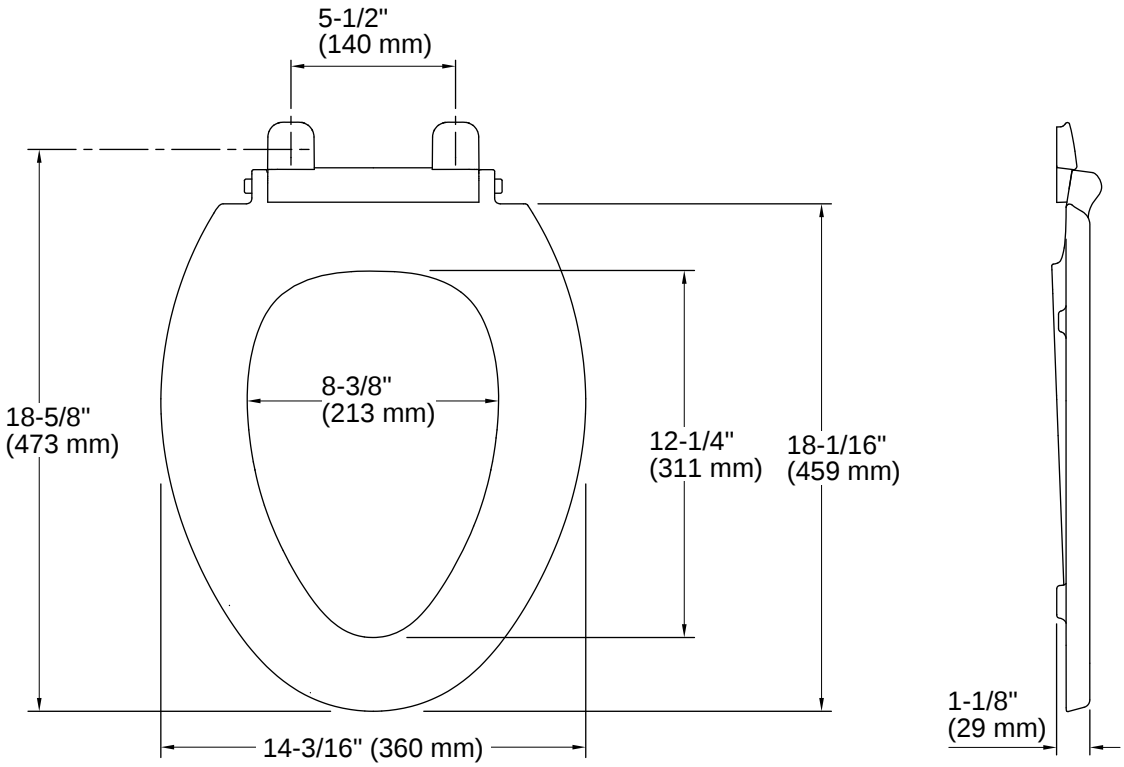

Installation Notes

Install this product according to the installation instructions.

1-800-4KOHLER (1-800-456-4537)
Kohler Co. reserves the right to make revisions without notice to product specifications.
For the most current specification sheet, go to www.kohler.com USA or www.kohler.ca Canada.
4-22-2026 11:4 - US-CA

THE BOLD LOOK OF KOHLER.