Staccato™ | K-5111

Stainless steel small sink rack, 9-5/8" x 15-7/8"

Features

- Fits in the small bowl of the K-3361 Staccato kitchen sink
- Helps protect sink surface from daily wear
- Innovative wheels around the perimeter provide a secure fit and reduce debris buildup
- Dishwasher-safe



Available Colors/Finishes

Color tiles intended for reference only.

ST Stainless Steel

1-800-4KOHLER (1-800-456-4537)
Kohler Co. reserves the right to make revisions without notice to product specifications.
For the most current specification sheet, go to www.kohler.com USA or www.kohler.ca Canada.
4-15-2026 4:50 - US-CA

Codes/Standards

None Applicable

Material

- Durable stainless steel construction

Recommended Products/Accessories

K-23729 Stainless steel cleaner

Warranty

See website for detailed warranty information.

KOHLER® Stainless Steel Sinks Lifetime Limited Warranty

1-800-4KOHLER (1-800-456-4537)
Kohler Co. reserves the right to make revisions without notice to product specifications.
For the most current specification sheet, go to www.kohler.com USA or www.kohler.ca Canada.
4-15-2026 4:50 - US-CA

THE BOLD LOOK OF KOHLER.

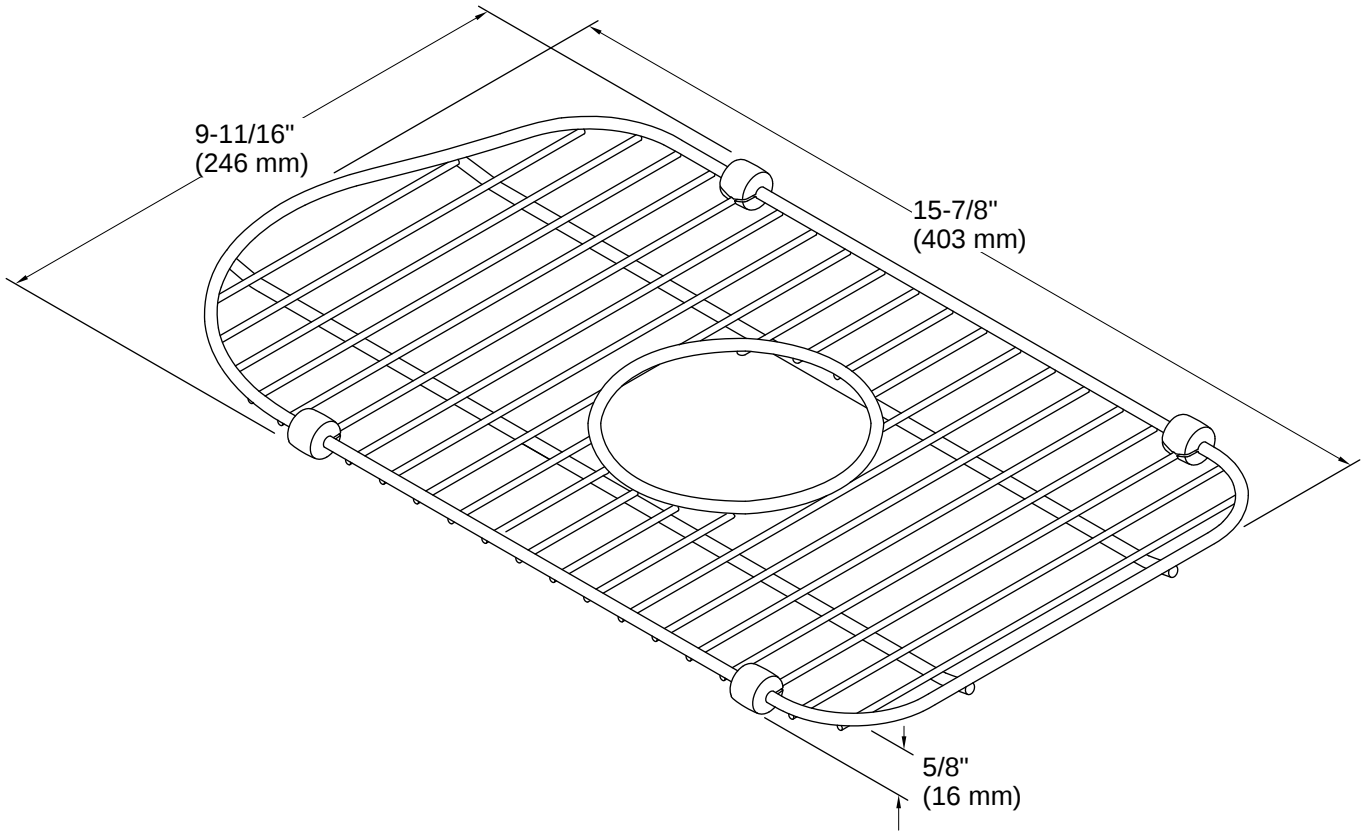

Installation Notes

Install this product according to the installation instructions.

1-800-4KOHLER (1-800-456-4537)
Kohler Co. reserves the right to make revisions without notice to product specifications.
For the most current specification sheet, go to www.kohler.com USA or www.kohler.ca Canada.
4-15-2026 4:50 - US-CA

THE BOLD LOOK OF KOHLER.