Installation and Operation instructions

INDOOR MODEL

RTG 199 ME

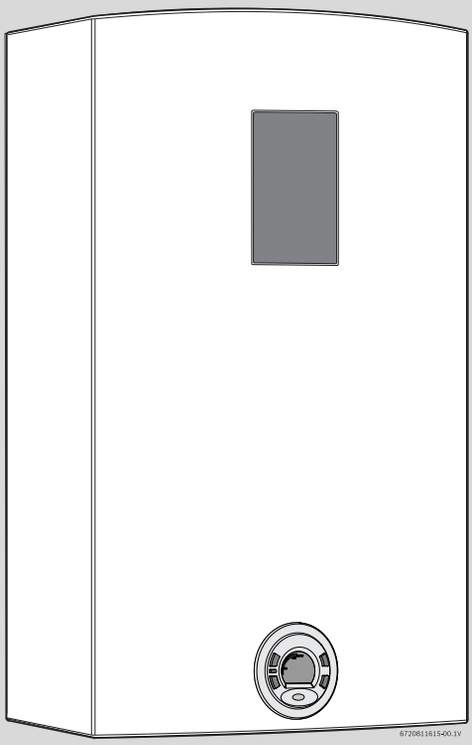

Warning: If the information in this manual is not followed exactly, a fire or explosion may result causing property damage, personal injury or death.
Do not store or use gasoline or other flammable vapors and liquids in the vicinity of this or any other appliance.
Installation and service must be performed by a trained and certified installer, service agency or the gas supplier.

Improper installation, adjustment, alteration, service or maintenance can cause injury or property damage. Refer to this manual. For assistance or additional information consult a qualified installer, service agency or the gas supplier.

In the Commonwealth of Massachusetts this product must be installed by a licensed plumber or gas fitter.

Upon completion of the installation, these instructions should be handed to the user of the appliance for future reference.

What to do if you smell gas

- Turn off the gas shut-off valve. Open windows and doors.
- Do not try to light any appliance.
- Do not touch any electrical switch, telephone, and do not use outlets.
- Extinguish all open flames. Do not smoke! Do not use lighters!
- Warn all occupants of the building. Do not ring doorbells!
- If you can hear gas leaking, leave the building immediately. Prevent others from entering the building and notify the police and fire department from outside the building.
- From outside the building, call the gas utility company and a trained and certified installer.

RTG 199 MEN - Natural Gas
RTG 199 MEX - Propane (LP Gas)

Temperature Modulated with Electronic Ignition Suitable for heating potable water and space heating
(Intended for variable flow applications)

6 720 811 615 / 238-50792-00A (2015/04)

AHRI CERTIFIED® www.ahridirectory.org

BRADFORD WHITE® WATER HEATERS

Table of contents

1 Key to symbols and safety instructions 3
1.1 Key to symbols 3
1.2 Safety instructions 3

2 FCC rules 6

3 Appliance details 7
3.1 Features 7
3.2 Specifications (Technical data) 7
3.3 Unpacking the heater 8
3.4 General rules to follow for safe operation 9
3.5 Dimensions and minimum installation clearances . . . 10

4 Installation instructions 11
4.1 Specialized tools 11
4.2 Introduction 11
4.3 Venting 11
4.4 Combustion air requirements 24
4.5 Proper location for installing your heater 24
4.6 Heater placement and clearances 25
4.7 Hanging appliance on the wall 25
4.8 Mounting installation 26
4.9 Gas piping & connections 27
4.10 Water connections 29
4.11 Water quality 30
4.12 Domestic hot water recirculation 30
4.13 Space heating applications 31
4.14 Measuring gas pressure 32

5 Electrical connections 33
5.1 Electrical power supply 33
5.2 Position of the fuses in control unit 33

6 Operation instructions 34
6.1 Description LCD Display 34
6.2 For your safety read before operating your water heater 35
6.3 Power 35
6.4 Temperature selection 35
6.5 Operation 36
6.6 Reset button 36
6.7 Program button 36
6.8 Locked condition 36

7 Maintenance and service 37
7.1 Annual maintenance 37
7.2 Winterizing for seasonal use 37
7.3 Mineral scale build-up 37
7.4 Adjusting CO2 38
7.5 Program values 40
7.6 Control board diagnostics 41

8 Troubleshooting 42
8.1 Introduction 42
8.2 Burner does not ignite when hot water is turned ON . . 42
8.3 Water is too hot 42
8.4 Water is not hot enough 42
8.5 Low water flow/pressure 42
8.6 Hot water temperature fluctuates at tap 43
8.7 Noisy burner/heater during operation 43

9 Problem solving 44
9.1 Error code diagnostics 44

10 Electrical diagram 47

11 Sensor resistance charts 48

12 Functional scheme 49

13 Interior components diagram 50
13.1 Interior components 50

14 Protecting the environment 51

15 LIMITED TANKLESS HEATER WARRANTY 52

16 Installer Checklist to be completed by installer upon installation 54

1 Key to symbols and safety instructions

1.1 Key to symbols

Warnings

Warnings in this document are identified by a warning triangle printed against a grey background.
Keywords at the start of a warning indicate the type and seriousness of the ensuing risk if measures to prevent the risk are not taken.

The following keywords are defined and can be used in this document:
- **DANGER** indicates a hazardous situation which, if not avoided, will result in death or serious injury.
- **WARNING** indicates a hazardous situation which, if not avoided, could result in death or serious injury.
- **CAUTION** indicates a hazardous situation which, if not avoided, could result in minor to moderate injury.
- **NOTICE** is used to address practices not related to personal injury.

Important information

This symbol indicates important information where there is no risk to people or property.

Additional symbols

Symbol	Explanation
▶	Step in an action sequence
→	Cross-reference to another part of the document
•	List entry
–	List entry (second level)

Table 1

1.2 Safety instructions

Read all instructions before installing. Perform the steps in the indicated sequence. Have the water heater inspected by a trained service technician at least once every year. Failure to comply with these instructions can result in severe, possibly fatal, personal injury as well as damage to property and equipment.

Installation and servicing
- ▶ **Risk of fire when soldering and brazing!**
  Take appropriate protective measures when soldering and brazing around combustible and flammable material.
- ▶ Ensure that only a licensed contractor installs or services the water heater.
- ▶ On hot components use only material with adequate temperature stability.

Installation and commissioning
- ▶ In the Commonwealth of Massachusetts, the water heater must be installed by a licensed plumber.
- ▶ Do not install this device in rooms with a high moisture level (e.g. bathrooms, saunas).

Function
- ▶ To ensure that the water heater functions properly, follow these installation and maintenance instructions.
- ▶ Never close the blow-off line of the T&P safety valve. For safety reasons, water may escape during heating.

If you smell gas
- ▶ Turn off the gas shut-off valve.
- ▶ Open windows and doors.
- ▶ Do not try to light the appliance.
- ▶ Do not touch any electrical switch, telephone, and do not use outlets.
- ▶ Extinguish all open flames. Do not smoke! Do not use lighters!
- ▶ Warn all occupants of the building. Do not ring doorbells!
- ▶ If you can hear gas leaking, leave the building immediately.
- ▶ Prevent others from entering the building and notify the police and fire department from outside the building.
- ▶ From outside the building, call the gas utility company and a trained and certified installer.

If you smell flue gas
- ▶ Switch off the appliance.
- ▶ Open windows and doors.
- ▶ Inform a trained and certified installer.

Insufficient ventilation may cause toxic flue gas to escape. Risk of poisoning.
- ▶ Never close off or reduce the size of the air intake and outlet openings.
- ▶ The appliance must not be operated until any obstructions have been removed.
- ▶ Inform the system operator in writing of the problem and the associated dangers.

Danger from escaping flue gases
- ▶ Ensure all vent pipes and chimneys are not damaged or blocked.
- ▶ Connect only one appliance to each vent system or chimney liner.
- ▶ The venting system piping must not feed into another air extraction duct.
- ▶ Do not route the flue system piping through or inside another air extraction duct.

Danger of explosion of flammable gases
- ▶ Work on gas components may only be carried out by a trained and certified installer.
- ▶ Installation, gas and flue connection, initial commissioning, electrical connections and annual maintenance must only be carried out by a trained and certified installer.

Combustion air
- ▶ Keep the combustion air free of corrosive substances (halogenated hydrocarbons that contain chlorine or fluorine compounds).

Never shut off safety valves!
- ▶ Water may escape from the safety valve at any time when the water is being heated.

Inspection/maintenance
- ▶ Servicing and repairs may only be carried out by a trained and certified installer.
- ▶ Immediately correct all faults to prevent system damage.
- ▶ Use only Bradford White spare parts! Damage caused by the use of parts not supplied by Bradford White may void the warranty.

Instruct the customer
- ▶ Explain to the customer how the appliance works and how to operate it.
- ▶ Inform the customer that he/she must not carry out any alterations or repairs.

Danger from electric shock
- ▶ Ensure that only an authorized contractor performs electrical work.
- ▶ Before performing electrical work, disconnect the power and secure the unit against unintentional reconnection.
- ▶ Ensure the system has been disconnected from the power supply.

Risk of scalding at the hot water draw-off point

- When the water heater is in operation, temperatures in excess of 122 °F (50 °C) can occur. To limit the temperature at the tap, install a thermostatic DHW mixing valve.
- Water heated for washing the laundry, dishes and for other cleaning purposes can cause scalding and permanent injuries.
- Children, elderly, and handicapped persons are more likely to be permanently injured by hot water. Never leave such individuals in the tub or shower unattended under any circumstances. Children must not be allowed to operate hot water faucets themselves or to fill a bathtub.
- If the building has occupants in the above groups who operate hot water faucets, or state laws / local ordinances stipulate specific water temperatures, take the following precautions:
  - Use the lowest possible temperature setting.
  - To prevent scalding, install a tempering device, such as an automatic mixing valve, at hot water tap or water heater. Select and install the automatic mixing valve in accordance with the valve manufacturer's recommendations and instructions.
- Water exiting from drain valves can be extremely hot. To avoid injuries:
  - Check that all connections are tight.
  - Direct exiting water away from people.
- Measures must be taken to protect against excessive temperature and pressure! Installation of a T&P safety valve is required.

To protect against corrosion and ensure compliance with the rules for electrical safety, observe the following points:

- Use metal fittings for potable water heating systems with plastic piping.
- Use only original accessories from the manufacturer.
- When installation of the water heater is complete, inspect the ground conductor (including metal fittings).

Maintenance
Customers are advised to:

- Sign a maintenance and inspection contract with an authorized contractor. Inspect and maintain the water heater as necessary and on a yearly basis. Service as needed.
- Use only genuine spare parts.

Flooding

- After a flood, do not use the appliance if any part has been submerged. Damage to appliances that have been submerged can be quite severe and pose numerous safety risks.
- Every appliance that has been submerged must be replaced.

For your safety

- Do not store or use gasoline or other flammable, combustible or corrosive vapors and liquids in the vicinity of this or any other appliance.

DANGER: Fatal accidents!
Carbon monoxide poisoning.
- Carefully plan where you install the heater. Correct combustion air supply and flue pipe installation are very important. If a gas appliance is not installed correctly, fatal accidents can result such as carbon monoxide poisoning or fire.

DANGER:
Carbon monoxide poisoning.
- Exhaust gas must be vented to outside using approved vent material. See table 8, page 13 (In Canada use only ULCS636 approved material). Vent and combustion air connector piping must be sealed gas-tight to prevent flue gas spillage, carbon monoxide emissions and risk of fire, resulting in severe personal injury or death. Approved vent terminations must be used when penetrating to the outside.

DANGER: Electric shock!
- Field wiring connections and electrical grounding must comply with local codes, or in the absence of local codes, with the latest edition of the National Electric Code, ANSI/NFPA 70, or in Canada, all electrical wiring must comply with the local codes and the Canadian Electrical Code, CSA C22.1 Part 1.

DANGER: Electric shock!
Shock hazard: line voltage is present.
- Before servicing the water heater, unplug power supply cord from outlet. Failure to do so could result in severe personal injury or death.

WARNING: Damage to the appliance from over pressure.
- The heater must be disconnected from the gas supply piping system during any pressure testing of that system at test pressures equal to or more than 0.5 psi.

NOTICE:
- The appliance should be located in an area where leakage of the heater or connections will not result in damage to the area adjacent to the appliance or to lower floors of the structure. When such locations cannot be avoided, it is recommended that a suitable drain pan, adequately drained, be installed under the appliance. The pan must not restrict combustion air flow.

WARNING:
- The maximum inlet gas pressure must not exceed the value specified by the manufacturer and the minimum value listed is for the purpose of input adjustment.

NOTICE:
- If a water heater is installed in a closed water supply system, such as one having a backflow preventer in the cold water supply line, means shall be provided to control thermal expansion. Contact the water supplier or local plumbing inspector on how to control this situation.

WARNING: Fire danger!
- Keep appliance area clear and free from combustible materials, gasoline and other flammable vapors and liquids.

NOTICE:
- Do not obstruct the flow of combustion and ventilation air.

NOTICE: Appliance malfunction!
- If power is lost while appliance is operating. Turn off both water and power for 15 seconds to reset device.

WARNING: Risk of scalding and property damage.
- Precautions must be taken prior to manually operating the relief valve to avoid contact with hot water discharged from the relief valve and to prevent water damage.

NOTICE: Appliance damage!
- Label all wires prior to disconnection when servicing controls. Wiring errors can result in improper and dangerous operation. Verify proper operation after servicing.

WARNING: System damage!
- If a relief valve discharges periodically, this may be due to thermal expansion in a closed water supply system. Contact the water supplier or local plumbing inspector on how to correct this situation. Do not plug the relief valve.

WARNING: Property damage!
- If the water heater is used in a space heating application, all piping and components connected to the water heater must be suitable for use with potable water.

WARNING: Personal Injury from toxic chemicals.
- Toxic chemicals, such as those used for boiler treatment, shall not be introduced into the potable water used for space heating.

WARNING: Personal Injury from toxic chemicals.

- A water heater which will be used to supply potable water shall not be connected to any heating system or component(s) previously used with a nonpotable water heating appliance.

WARNING: Installation in mobile homes.

- Installation in mobile homes shall conform to Title 24 CFR, part 3280 and/or CAN/CSA Z240 MH Series, Mobile Homes.

2 FCC rules

FCC: This device complies with Part 15 of the FCC rules. Operation is subject to the following two conditions: (1) This device may not cause harmful interference, and (2) this device must accept any interference received, including interference that may cause undesired operation.

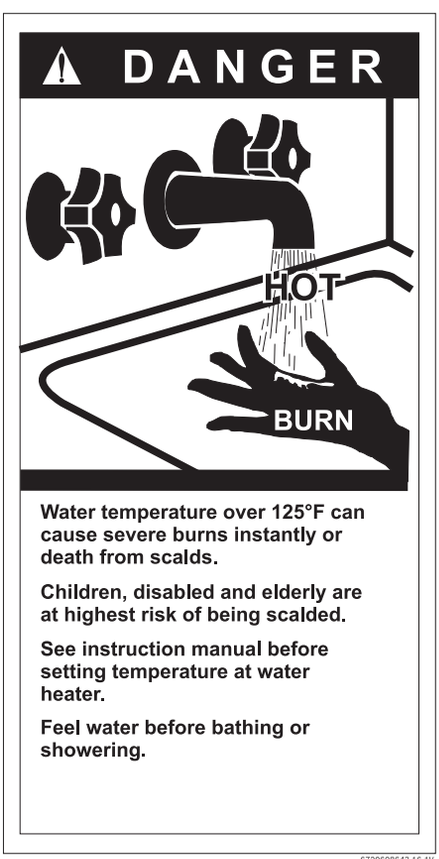

Fig. 1

The chart below shows the relationship between water temperature and time until there is a risk of scalding. It can be used as the basis for determining the safest water temperature for your application.

Temperature	Time to severe scalding[1)]
120 °F (48 °C)	longer than 5 minutes
125 °F (51 °C)	1.5 to 2 minutes
130 °F (54 °C)	approx. 30 seconds
135 °F (57 °C)	approx. 10 seconds
140 °F (60 °C)	less than 5 seconds
145 °F (62 °C)	less than 3 seconds
150 °F (65 °C)	approx. 1.5 seconds
155 °F (68 °C)	approx. 1 second

Table 2 Approximate time-temperature relationship until there is a risk of scalding

1) Source: Moritz, A.R. and Henriques, F.C., Jr. (1947). Studies of thermal injury. II. The relative importance of time and surface temperature in the causation of cutaneous burns, Am J of Pathol, 23, 695-720.

3 Appliance details

3.1 Features

Parts

- Key Pad interface control.
- High power pre-mix compact burner with low NOx emissions.
- Modulating Gas Valve with constant gas:air ratio control.
- Modulating water valve for improved comfort and temperature control.

High quality materials for long working life

- Copper heat exchanger.
- High efficiency Ceramat Burner.
- Compact space saver: mounts on a wall with a supplied bracket.

Features

- Easily removable one-piece cover.
- On/Off and Temperature control switches.
- Reset button.
- Program button (Selectable temperature default).
- Failure codes for easy diagnostics and repair.
- Real-time diagnostics for troubleshooting/informational purposes.
- Built in freeze prevention.

Note: The freeze prevention kit is designed to provide protection for the water heater down to approximately 5°F for short term conditions only. It will not protect the appliance in areas where the temperature is routinely expected to be below freezing.
- The freeze prevention kit will not protect plumbing outside the appliance from freezing. Precautions should be taken.

Bradford White is constantly improving its products, therefore specifications are subject to change without prior notice.

3.2 Specifications (Technical data)

Approved in US/Canada

Technical characteristics	Units	RTG 199 ME
Capacity		
Maximum flow rate at a 45 °F (25 °C) rise	GPM (l/min)	7.3 (27.7)
Maximum flow rate at a 55 °F (30.6 °C) rise	GPM (l/min)	6.0 (22.7)
Maximum flow rate at a 75 °F (41.7 °C) rise	GPM (l/min)	4.4 (16.6)
Maximum flow rate at a 90 °F (50 °C) rise	GPM (l/min)	3.7 (13.9)
Maximum output	BTU/hr (kW)	160,500 (47)
Maximum input	BTU/hr (kW)	199,000 (58.3)
Thermal efficiency (Efficiency in %)	%	> 83%
Minimum Input	BTU/hr (kW)	19,900 (5.8)
Temperature Control		
Selection range	°F (°C)	100 - 140 (38 - 60)
Default temperature	°F (°C)	122 (50)
Stability	°F (°C)	± 2 (± 1)
Gas Requirement		
Gas connection	inches	¾ "
Peak load inlet gas pressure[1)]		
Propane	water column	8” - 13”
Natural Gas	water column	3.5” - 10.5”
Water		
Hot water connection	inches	¾ "
Cold water connection	inches	¾ "
Minimum water flow[2)]	GPM (l/min)	0.5 (1.9)
Minimum recommended water pressure	PSI (bar)	30 (2.07)
Minimum well pressure	PSI	40
Water valve material		Polymer (PPS) (Polypropylene Sulfide)
Connections:		Bottom of heater
Combustion		
CO level	ppm	≤ 250 (measured)
CO_2 level (set from factory)	%	see table 36
Dimensions		
Depth	inches (mm)	11 ¼ (286)
Width	inches (mm)	17 $^{7}/_{8}$ (452)
Height	inches (mm)	30½ (775)
Weight	pounds (kg)	67 (30.5)
Gas types		
Natural Gas		

Table 3

Technical characteristics	Units	RTG 199 ME
LP Gas		
Voltage		
Nominal	V AC	120
Frequency	Hz	60
Amperage		
Idle	mA	40
Operation	A	≤ 2.5
Noise	db (A)	45 - 65
Water protection[3)]	IP	X4D

Table 3

1) To measure Gas Pressure, see Measuring Gas Pressure, chapter 4.14, page 32.
2) Activation varies with inlet water temperatures from 0.5 - 1.6 gallon/minute (1.9 - 6.1 l/m).
3) Protection against water drops.

If appliance is installed at elevations above 2000ft, refer to chapter 4.3.8 Fan speed adjustment.

Safety devices

- Flame failure device (ionization flame rod sensor)
- Overheat prevention (temperature limiter)
- Inlet temperature sensor
- Outlet temperature sensor
- Back flow temperature sensor

3.3 Unpacking the heater

Before installing the unit, be certain you have the correct heater for your type of Gas - Propane or Natural Gas. Identification labels are found on the shipping box, and on the rating plate which is located on the right side panel of the cover.

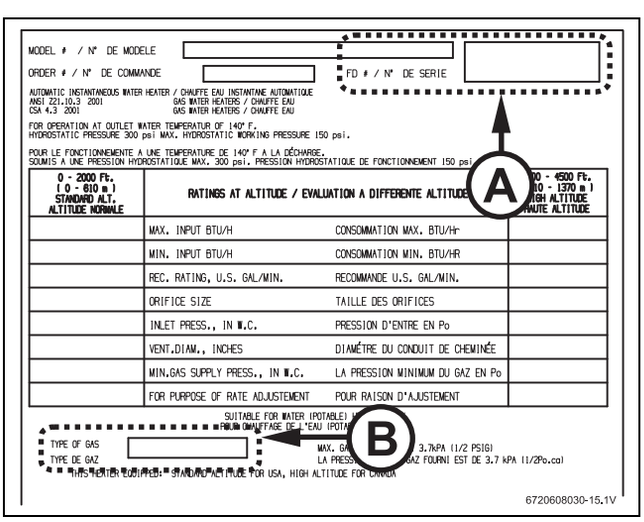

Fig. 2 Rating plate

[A] Serial number
[B] Type of gas

3.3.1 The box includes

- Tankless water heater
- Bracket for wall hanging the heater
- Installation manual
- Energy Guide label (in the front cover)

The RTG 199ME is not approved or designed for:

- **Manufactured (mobile) homes, boats or any mobile installation. (Modular homes are acceptable for installation).**
- **Use above 8000 ft A.S.L. altitude (see page 22).**
- **Outdoor installation without installation of Outdoor kit.**
- **Applications where inlet water temperature is higher than 140 °F (60 °C). A 3-way valve or mixing valve must be installed before the appliance if inlet water temperature exceeds this limit.**

.

3.3.2 Remove front cover

▶ Loosen the two Phillips head screws located on bottom rear of cover.

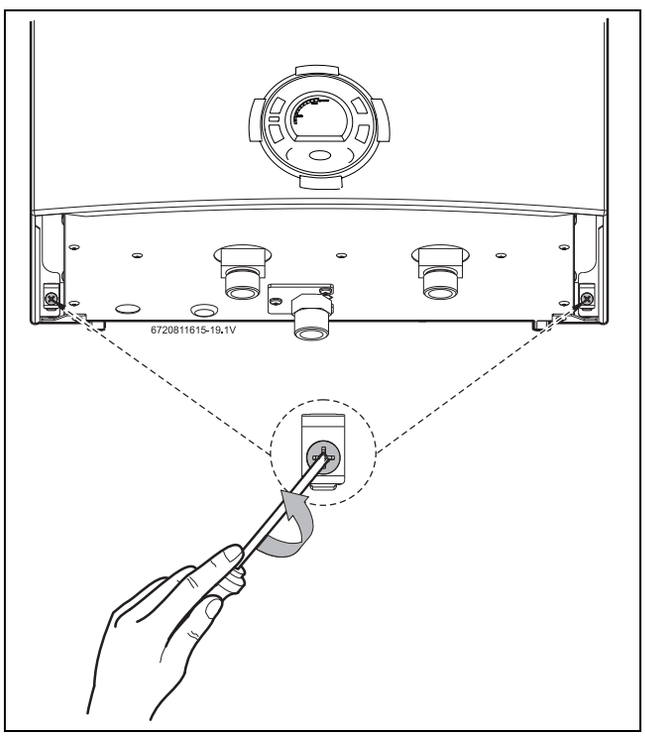

Fig. 3 Loosen the two screws

▶ Lift front cover panel upward and remove.

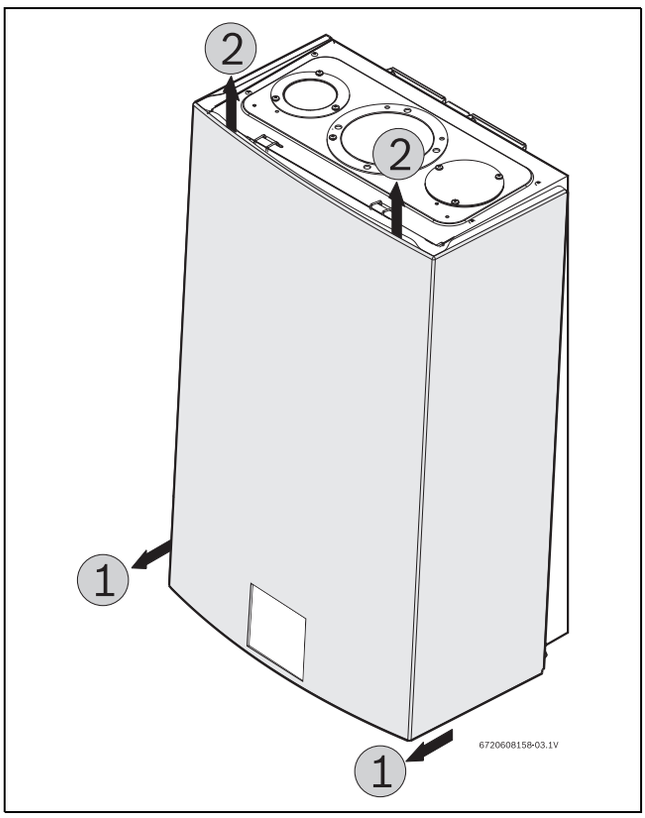

Fig. 4 Remove the front cover

3.3.3 Remove combustion cover (service only)

▶ Open the four clips and remove the combustion cover.

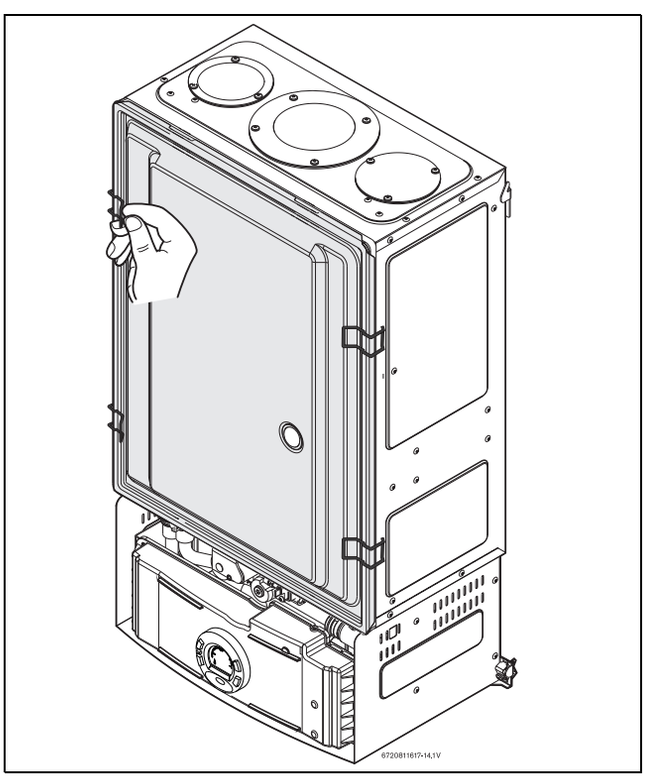

Fig. 5 Remove the combustion cover

3.4 General rules to follow for safe operation

- **1.** You must follow these instructions when you install your heater. In the United States: The installation must conform with local codes or, in the absence of local codes, the National Fuel Gas Code ANSI Z223.1/NFPA 54.
  In Canada: The Installation must conform with CSA B149.(1,2) INSTALLATION CODES and /or local installation codes.
- **2.** Carefully plan where you install the heater. Correct combustion air supply and vent pipe installation are very important. If not installed correctly, fatal accidents can occur, such as carbon monoxide poisoning or fire.
- **3.** When the unit is installed indoors and ROOM SEALED (twin pipe) it is permitted to be located in bathrooms, bedrooms and occupied rooms that are normally kept closed. See chapter 4.3 (page 11). If the unit will be installed indoors and use indoor combustion air, the place where you install the heater must have enough ventilation. **The National Fuel Gas Codes do not allow UNSEALED gas fired water heater installations in bathrooms, bedrooms or any occupied rooms normally kept closed.** See chapter 4.4 (page 24).
- **4.** You must correctly vent your heater. See chapter 4.3 (page 11) on VENTING.
- **5.** The appliance and its gas connection must be leak tested before placing the appliance in operation.
  The appliance must be isolated from the gas supply piping system by closing its individual manual gas shutoff valve (not supplied with heater) during any pressure testing at pressures in excess of ½ Psig (3.5 kPa).
- **6.** Keep water heater area clear and free from combustibles and flammable liquids. Do not locate the heater over any material which might burn.
- **7. Correct gas pressure** is critical for the proper operation of this heater. Gas piping must be sized to provide the required pressure at the maximum output of the heater, while all the other gas appliances are in operation. Check with your local gas supplier, and see the section on connecting the gas supply. See chapter 4.9 (page 27).
- **8.** Should overheating occur or the gas supply fail to shut off, turn off the gas supply at the manual gas shut off valve, on the gas line. Note: manual gas shutoff valve is not supplied with the heater but must be field installed.
- **9.** Do not use this appliance if any part has been underwater. Immediately call a qualified service technician to inspect the appliance and to replace any part of the control system and any gas control which has been underwater.
- **10.** Failure to install heater correctly may lead to unsafe operation and void the warranty.

3.5 Dimensions and minimum installation clearances

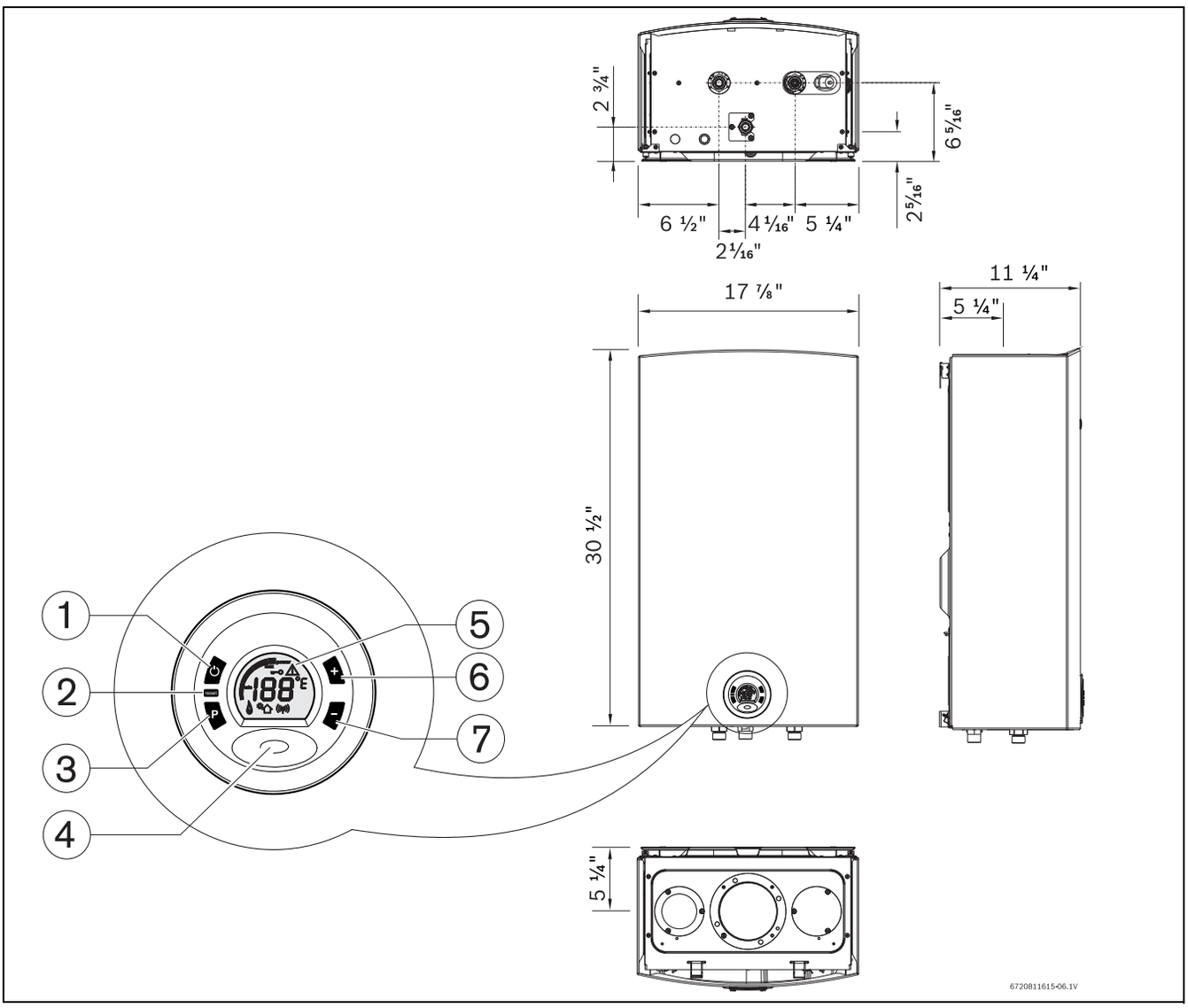

Fig. 6 Dimensions

[1] On/Off button
[2] Reset button
[3] Program key
[4] Power ON or stand-by LED
[5] LCD display
[6] Up button
[7] Down button

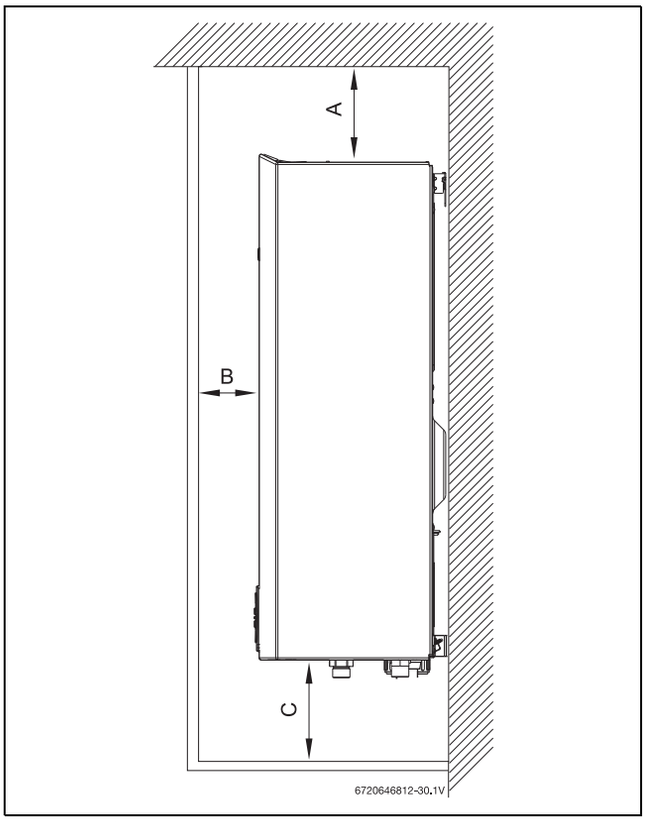

Fig. 7 Side view

For servicing access, a 2ft clearance is recommended to the front cover.

	Model RTG 199ME
TOP (A)	12”
FRONT (B)	1”
BACK	0”
SIDES	1”
FLOOR (C)	12”

Table 4 Minimum clearances

4 Installation instructions

4.1 Specialized tools

The following specialized tools may be required for installation:

- Manometer
- Multi-meter
- Combustion Gas Analyzer

4.2 Introduction

Please follow these instructions. Failure to follow instructions may result in:

- ▶ Damage or injury.
- ▶ Improper operation.
- ▶ Loss of warranty.

DANGER:

- ▶ The water heater must be installed by a qualified installer in accordance with these instructions. If improperly installed, a hazardous condition such as explosion or carbon monoxide poisoning could result. Manufacturer is not responsible for improperly installed appliances.

Common installation practice is to first determine the venting/combustion air point of termination, then design the piping layout back to the heater.

4.3 Venting

NOTICE:

- ▶ Do not reduce the exhaust or combustion air vent pipe sizes.
- ▶ Do not common vent with any other vented appliance or stove.

DANGER: Flue gas poisoning!

- ▶ Failure to vent the exhaust gases to the outside with sealed stainless steel vent pipe (AL29-4C) may result in dangerous flue gases filling the structure in which it is installed.

WARNING:

- ▶ Do not mix vent pipe or joining methods from different manufacturers.

WARNING:

- ▶ Approved terminators must be used for inlet and exhaust vent systems to prevent rain from entering the appliance. Failure to do so may result in damage to the appliance. This failure is not covered under the manufacturer’s warranty.

CAUTION:

- ▶ The vent system must be installed by a qualified installer in accordance with these instructions. If improperly installed, a hazardous condition such as explosion or carbon monoxide poisoning could result. Manufacturer will not be responsible for improperly installed appliances.

NOTICE:

- In areas where outside temperatures routinely come close to freezing, sealed combustion operation is required. Concentric termination or separate terminations for combustion and vent, must be installed on the same wall or roof surface; however, never facing the direction of prevailing winds. Failure to do so may result in heat exchanger freezing and bursting. This failure is not covered under the manufacturer's warranty.

WARNING: Appliance malfunction!

- Protect the exhaust and inlet from leaves and debris by installing a screen on the end of the termination. ¼ " mesh minimum opening recommended on screen.

4.3.1 Vent material

Establish vent clearances that comply with the vent manufacturer's specifications. In all cases, follow local codes. See table 5:

Item	Diam.	Material
Exhaust Vent	3 or 4 inches	Sealed single wall stainless steel (AL29-4C)
Intake Vent	PVC	Sealed PVC or any other rigid pipe

Table 5 Venting Specifications

Horizontal venting systems only:

An optional stainless concentric vent/air intake termination can be used to provide only one penetration point through the exterior wall (see fig. 8, 9 & 10). The concentric vent/air intake kit can be ordered from your local wholesaler. Note: Only tee terminals are approved for use with the concentric vent/air intake kit (see Table 6). Vent piping and tee terminal used with kit must be from the same vent pipe manufacturer. The appliance can also be installed with separate air intake and exhaust piping (see Fig.16).

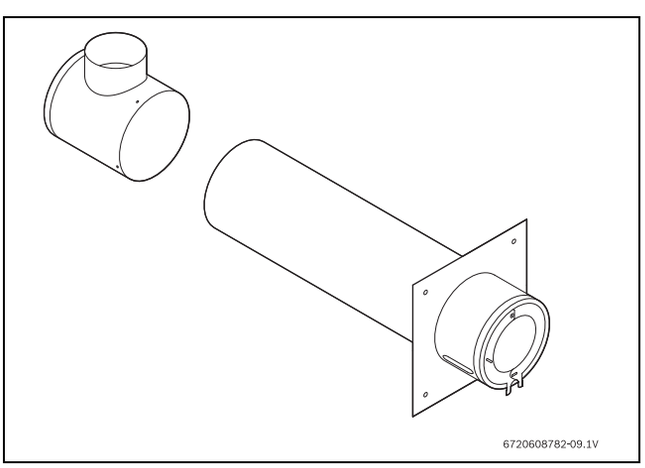

Fig. 8 Concentric kit

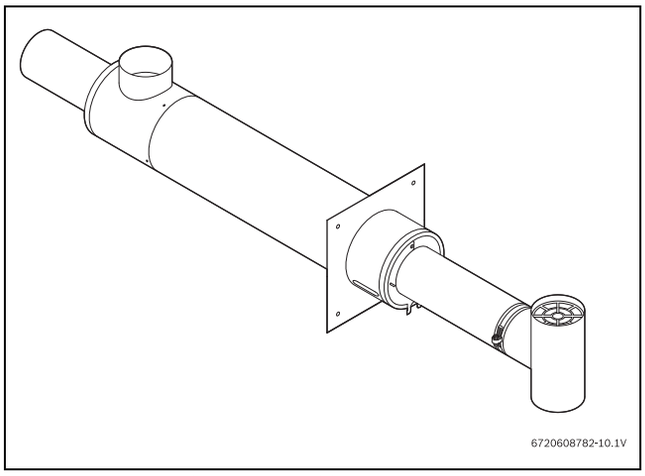

Fig. 9 Concentric kit vent assembly

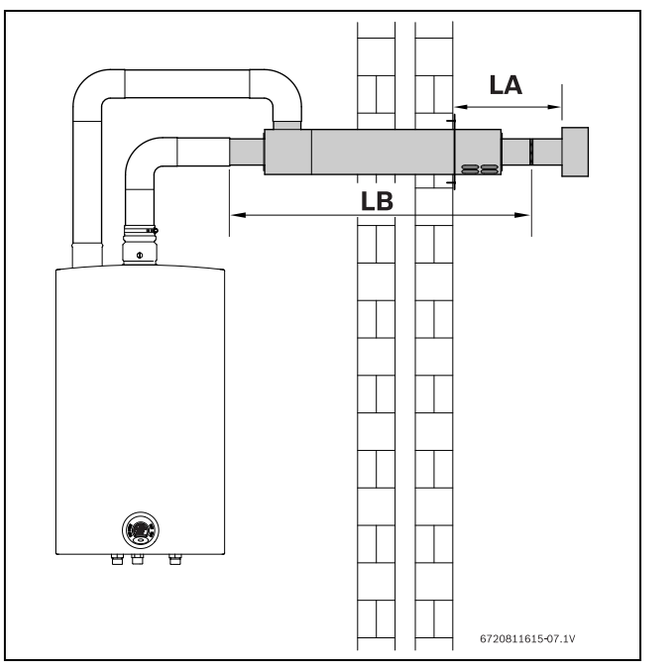

Fig. 10 Concentric kit installation

[LA] 12 inches
[LB] 3 inches stainless steel pipe

4.3.2 Vent specifications

Install appliance as close to point of vent termination as possible. The exhaust piping must vent directly to the outside of the structure. Horizontal sections of vent must pitch upward towards termination ¼" for every foot of horizontal length, to prevent the pooling of condensate, and be supported at 4 foot intervals with overhead hangers. Exception: horizontal run between last elbow and termination must pitch down to termination 1/4" per foot. Note: For horizontal terminations, venting must terminate once it penetrates to the outside of the structure. There must be no sections of vent pipe exposed to the outdoors other than the termination. Note: Listed thimbles or collars are necessary where venting passes through wall and ceiling partitions. If the vent system passes through combustible areas where the vent clearance requirements cannot be maintained, consult local codes. The distance to combustibles using this chase technique is 1 inch. Note: Type-B vent must never be used as the actual exhaust vent system for the appliance, as it is not gas tight and illegal for use with this appliance. This will create a serious health hazard and void the warranty.

3" VENTING	**Z flex**	**Protech**	**Heat Fab**
3" 90° elbow	2SVEEWCF0390	FSELB9003	9314
3" Tee Terminal	2SVSTTF03	FSTT3	9390TEE
3" Horizontal Terminal	2SVSTB03	FSTB3	N/A
3" horiz. terminal with damper	2SVSHTD03	N/A	N/A
3" Vertical Terminal	2SVSRCF03	FSRC3	5300CI

Table 6 3" Terminator Part Numbers

4" VENTING	**Z flex**	**Protech**	**Heat Fab**
4" 90° elbow	2SVEEWCF0490	FSELB9004	9414
4" Tee Terminal	2SVSTTF04	FSTT4	9490TEE
4" Horizontal Terminal	2SVSTB04	FSTB4	N/A
4" horiz. terminal with damper	2SVSHTD04	FSRC4	5400CI
4" vertical terminal	2SVSRCF04	N/A	N/A

Table 7 4" Terminator Part Numbers

For specific questions concerning vent material, specifications, usage or installation, please contact the vent manufacturer directly.

Company	Contact info
Z-flex	www.z-flex.com 800-654-5600
ProTech Industries	www.protechinfo.com 800-766-3473
Heat-Fab	www.heatfab.com 800-772-0739

Table 8 Vent manufacturers

Condensate drain requirements

An external condensate drain (not supplied with the heater) must be installed under the following conditions:

- All vertical terminating vent installations.
- Horizontal terminating vent installations where the total linear vent length is greater than 10 feet (3.1 m) for 3" and 5 feet (1.5 m) for 4".
- Vent installations where any section of the exhaust vent pipe passes through an unconditioned space.

Twin pipe termination clearances

The minimum clearance between exhaust vent and combustion air inlet terminations for twin pipe penetration is 3 feet.

Minimum combustion air and exhaust pipe length

The minimum exhaust pipe length is 1 foot (0.3m) of straight vent pipe. The minimum combustion air pipe length is one 90° elbow.

Maximum combustion air and exhaust pipe length

The following tables display the maximum allowable straight pipe lengths for combustion air and exhaust piping with consideration to the number of elbows used. Reduce the equivalent length for each elbow used from the maximum allowable length depending on the system used.

Venting	**Maximum allowable total vent Length**	**Maximum allowable Exhaust Length**	**Maximum allowable Intake Length**	**Elbow Equivalency**	
				90°	**45°**
3"	57 ft	28.5 ft	28.5 ft	5 ft	2.5 ft
4"	122.5 ft	61.25 ft	61.25 ft	5 ft	2.5 ft

Table 9 Maximum Allowable Exhaust and Combustion Air Lengths

Use of elbows

It is recommended to limit the amount of elbows used in the exhaust and combustion air piping to reduce friction in the air flow. The following lists the maximum amount of 90° elbows allowed in either the exhaust or combustion air piping:

Max. number of 90° elbows	**3" venting**	**4" venting**
Max number of elbows	5	7

Table 10

Two 45° elbows are equal to one 90° elbow. Any combination of 45° and 90° elbows may be used in the vent system as long as the combination does not exceed the maximum listed in table 9 above.

Calculation example for 3" venting:
Exhaust

System used	Concentric
Number of 90° elbows needed:	1
Number of 45° elbows needed:	2

Table 11

Calculation of example	
Max. length	28.5’
90° elbow reduction	- 5’
sub-total =	23.5’
45° elbow reduction	- 5’
Total =	18.5’

Table 12

For this example, the maximum allowable exhaust pipe length is **18.5 feet**.

Combustion air

System used	Concentric
Number of 90° elbows needed:	2
Number of 45° elbows needed:	1

Table 13

Calculation of example	
Max. length	28.5’
90° elbow reduction	- 10’
sub-total =	18.5’
45° elbow reduction	- 2.5’
Total =	16’

Table 14

For this example, the maximum allowable combustion air pipe length is **16 feet**.

Calculation example for 4" venting:
Exhaust

System used	Twin pipe
Number of 90° elbows needed:	2
Number of 45° elbows needed:	2

Table 15

Calculation of example	
Max. length	61.25’
90° elbow reduction	- 10’
sub-total =	51.25’
45° elbow reduction	- 5’
Total =	46.25’

Table 16

For this example, the maximum allowable exhaust pipe length is **46.25 feet**.

Combustion air

System used	Twin pipe
Number of 90° elbows needed:	1
Number of 45° elbows needed:	2

Table 17

Calculation of example	
Max. length	61.25’
90° elbow reduction	- 5’
sub-total =	56.25’
45° elbow reduction	- 5’
Total =	51.25’

Table 18

For this example, the maximum allowable combustion air pipe length is **51.25 feet**.

Required direct vent terminal clearances (twin pipe / concentric penetration)

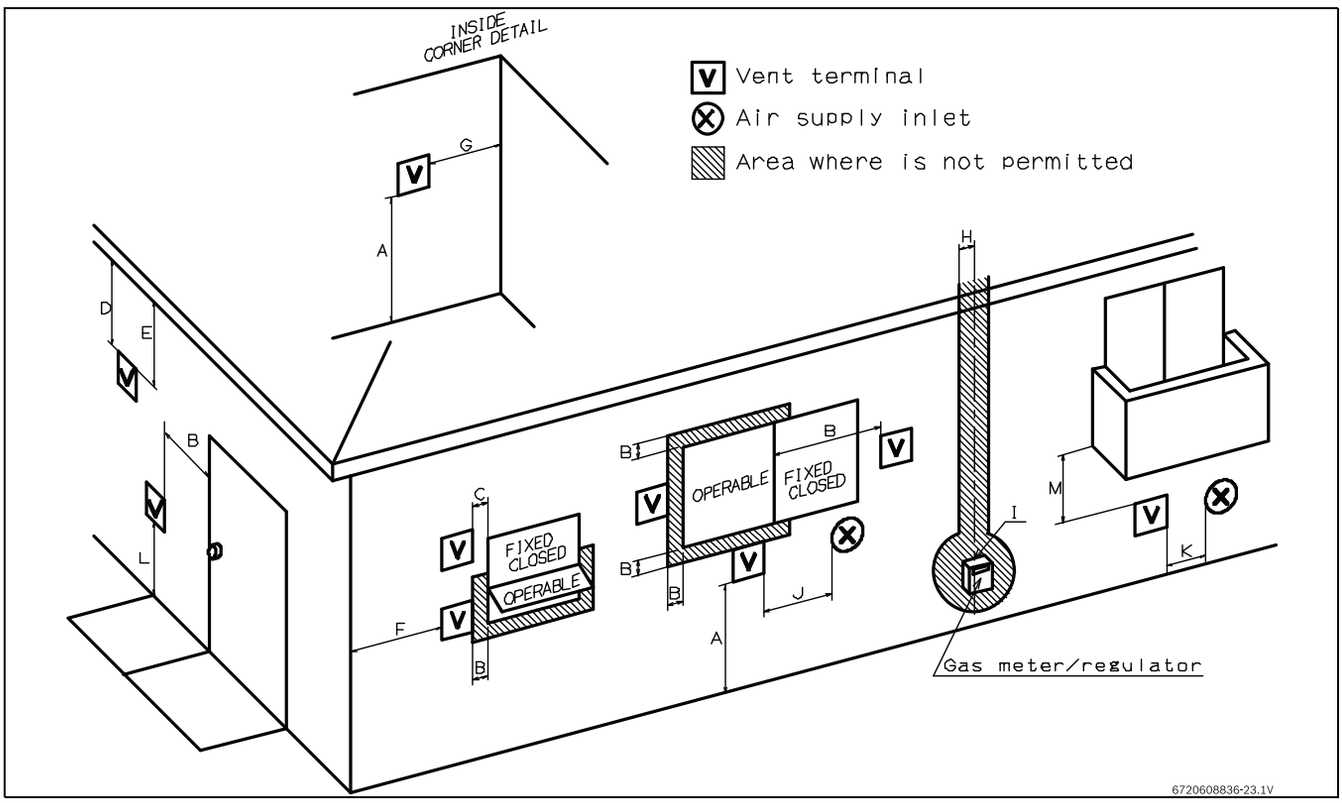

Fig. 11

		Canadian installations[1)]	U.S. installations[2)]
A	Clearance above grade, veranda, porch, deck or balcony	12 in.	12 in.
B	Clearance to window or door that may be opened	36 in.	12 in.
C	Clearance to permanently closed window	*	*
D	Vertical clearance to ventilated soffit located above the vent termination within a horizontal distance of 2 feet (61cm) from the center line of the termination	*	*
E	Clearance to unventilated soffit	*	*
F	Clearance to outside corner	*	*
G	Clearance to inside corner	*	*
H	Clearance to each side of center line extended above meter/ regulator assembly	36 in. within a height 15 feet above meter/ regulator assembly	*
I	Clearance to service regulator vent outlet	36 in.	*
J	Clearance to non-mechanical air supply inlet to building or the combustion air inlet to any other application	36 in.	12 in.
K	Clearance to mechanical air supply inlet	72 in.	36 in. above if within 10 feet horizontally
L	Clearance above paved sidewalk or paved driveway located on public property	84 in. [3)]	*
M	Clearance under veranda, porch deck or balcony	12 in. [4)]	*

Table 19

1) In accordance with the current CSA B149.1 Natural Gas and Propane Installation Code.

2) In accordance with the current ANSI Z223.1 / NFPA 54 National Fuel Gas Code.

3) A vent shall not terminate directly above a sidewalk or paved driveway that is located between two single family dwellings and serves both dwellings.

4) Permitted only if veranda, porch, deck or balcony is fully open on a minimum of two sides beneath the floor.

[*] For clearances not specified in ANSI Z223.1 / NFPA 54 or CSA-B149.1, one of the following shall be indicated:
a) A minimum clearance value determined by testing in accordance with section 2.20, or;
b) A reference to the following footnote:
“Clearance in accordance with local installation codes and the requirements of the gas supplier.”

Required other than direct vent terminal clearances (single pipe penetration)

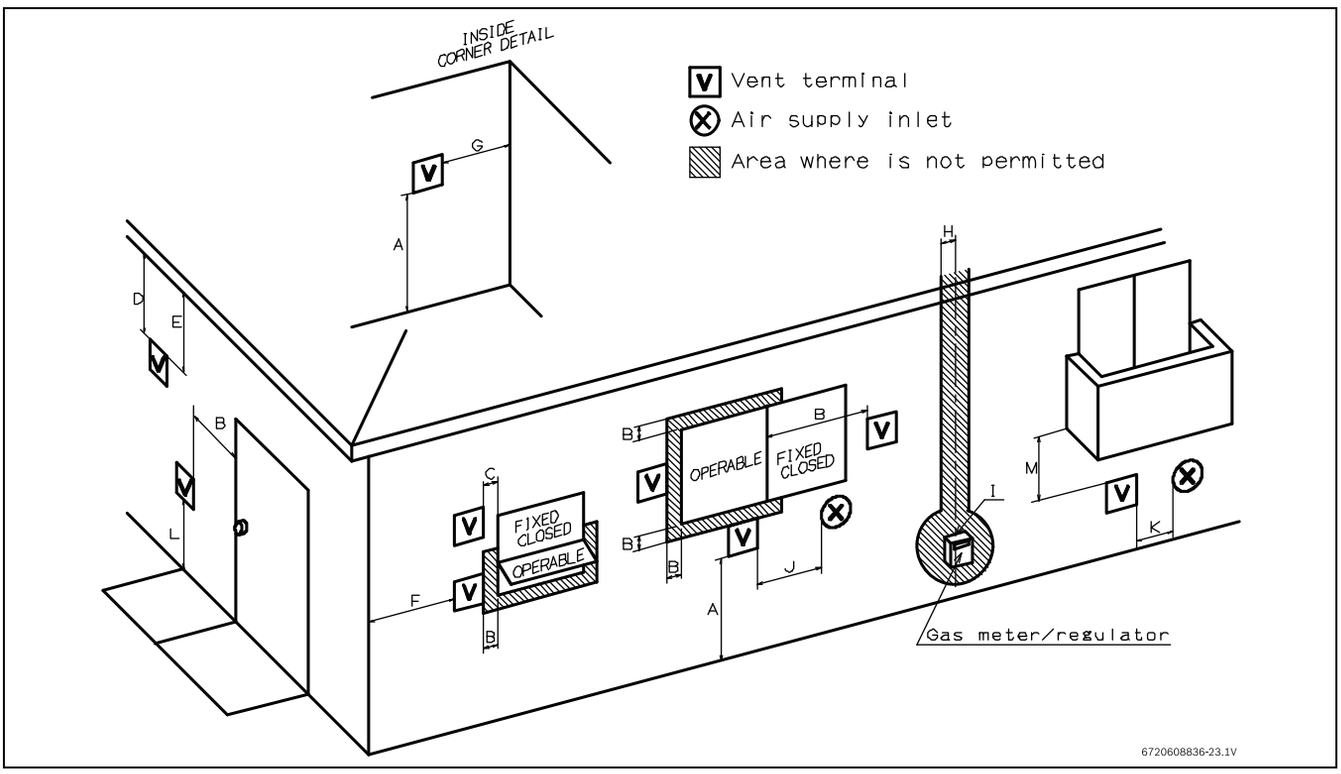

Fig. 12

		Canadian installations[1)]	U.S. installations[2)]
A	Clearance above grade, veranda, porch, deck or balcony	12 in.	12 in.
B	Clearance to window or door that may be opened	36 in.	4 feet below or to side of opening; 1 foot above opening
C	Clearance to permanently closed window	*	*
D	Vertical clearance to ventilated soffit located above the vent termination within a horizontal distance of 2 feet (61cm) from the center line of the termination	*	*
E	Clearance to unventilated soffit	*	*
F	Clearance to outside corner	*	*
G	Clearance to inside corner	*	*
H	Clearance to each side of center line extended above meter/ regulator assembly	36 in. within a height 15 feet above meter/ regulator assembly	*
I	Clearance to service regulator vent outlet	36 in.	*
J	Clearance to non-mechanical air supply inlet to building or the combustion air inlet to any other application	36 in.	4 feet below or to side of opening; 1 foot above opening
K	Clearance to mechanical air supply inlet	72 in.	36 in. above if within 10 feet horizontally
L	Clearance above paved sidewalk or paved driveway located on public property	84 in. [3)]	84 in.
M	Clearance under veranda, porch deck or balcony	12 in. [4)]	*

Table 20

1) In accordance with the current CSA B149.1 Natural Gas and Propane Installation Code
2) In accordance with the current ANSI Z223.1 / NFPA 54 National Fuel Gas Code
3) A vent shall not terminate directly above a sidewalk or paved driveway that is located between two single family dwellings and serves both dwellings.
4) Permitted only if veranda, porch, deck or balcony is fully open on a minimum of two sides beneath the floor.

[*] For clearances not specified in ANSI Z223.1 / NFPA 54 or CSA-B149.1, one of the following shall be indicated:
a) A minimum clearance value determined by testing in accordance with section 2.20, or;
b) A reference to the following footnote:
“Clearance in accordance with local installation codes and the requirements of the gas supplier.”

4.3.3 Vent configuration examples

Below are approved examples of vertical and horizontal venting installations.

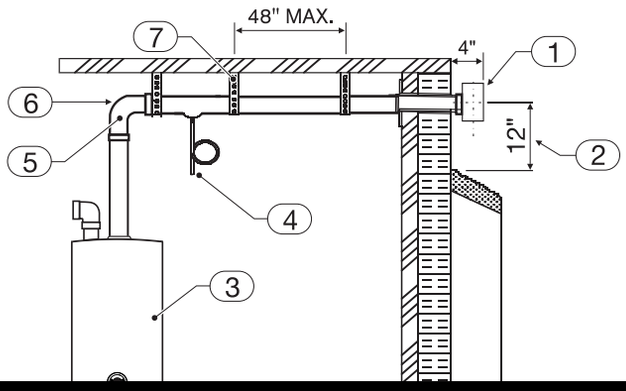

[1]
[2]
[3] App
[4] Drain t
[5] Elbow (no
[6] Horizontal ru
[7] Hanger strap

(twin pipe direct vent)

Fig. 14 Horizontal venting installation (combustion air piping not shown)

[1] Termination
[2] Minimum above ground or normally expected snow accumulation level
[3] Appliance
[4] Elbow (note: minimum 1ft of straight vent pipe required)
[5] Horizontal run ¼ " per foot down to termination

WARNING:

- Single pipe penetration should be used in n
  freezing climates only!

Be **xamples of vertical venting installations.**

Impo

Note: Pr zontal runs down toward the heater, ¼ " per foot.

4.3.8 Fan speed adjustment

NOTICE: IMPORTANT INFORMATION!
- ▶ Natural gas heaters with installation altitudes below 2,000 ft above sea level disregard this section.

Installation adjustment:
After installing the tankless water heater, the fan speed values for minimum power (P2) and maximum power (P1) may need adjustment due to variations in altitude and vent pipe length. Failure to make necessary adjustments to fan speed values may result in improper operation of the appliance.

First calculate the total equivalent vent length. This is the straight pipe length of both exhaust and combustion air plus the number of elbows used. To determine the length equivalency of each elbow refer to table 9. Use the equivalent vent length value to determine the appropriate fan speed values found in table 23 and 24. Refer to page 23 on how to adjust the fan speeds if an adjustment is necessary. After changing fan speed values, proceed to chapter 7.4 to confirm CO_2 values are within specified ranges.

Altitude (above sea level)	Total equivalent vent length[1)]	Minimum power fan speed (P2)	Natural Gas Maximum power fan speed (P1)	Liquid propane Maximum power fan speed (P1)	
0 - 2000 ft (0 - 610 m)	3.5 - 32 ft	7	No modification required	No modification required	For operation at elevations above 2,000 ft (610 m) the equipment ratings shall be reduced at the rate of 4% for each 1,000 ft (305 m) above sea level
	33 - 57 ft	8			
2000 - 4500 ft (610 - 1372 m)	3.5 - 32 ft	8*	54*	47*	
	33 - 57 ft	8*	55*	48*	
4500 - 8000 ft (1372 - 2439 m)	3.5 - 32 ft	9*	55*	48*	
	33 - 57 ft	9*	55*	49*	
* Above 2000 ft, CO2 levels must be checked with a combustion gas analyzer, see section7.4 for instructions.					

Table 23 Fan speed adjustment for 3" piping

1) Full equivalent length (inlet + outlet piping + fittings)

Altitude (above sea level)	Total equivalent vent length[1)]	Minimum power fan speed (P2)	Natural Gas Maximum power fan speed (P1)	Liquid propane Maximum power fan speed (P1)	
0 - 2000 ft (0 - 610 m)	2.25 - 59 ft	7	No modification required	No modification required	For operation at elevations above 2,000 ft (610 m) the equipment ratings shall be reduced at the rate of 4% for each 1,000 ft (305 m) above sea level
	60 - 122.5 ft	8			
2000 - 4500 ft (610 - 1372 m)	2.25 - 59 ft	8*	54*	47*	
	60 - 122.5 ft	8*	55*	48*	
4500 - 8000 ft (1372 - 2439 m)	2.25 - 59 ft	9*	55*	48*	
	60 - 122.5 ft	9*	55*	49*	
* Above 2000 ft, CO2 levels must be checked with a combustion gas analyzer, see section7.4 for instructions.					

Table 24 Fan speed adjustment for 4" piping

1) Full equivalent length (inlet + outlet piping + fittings)

Adjusting minimum power fan speed (P2)

To select fan speed:

- Press ON/OFF button into ON.
- Immediately following, press and hold simultaneously buttons + or − and P for 3 seconds, until display reads P2.

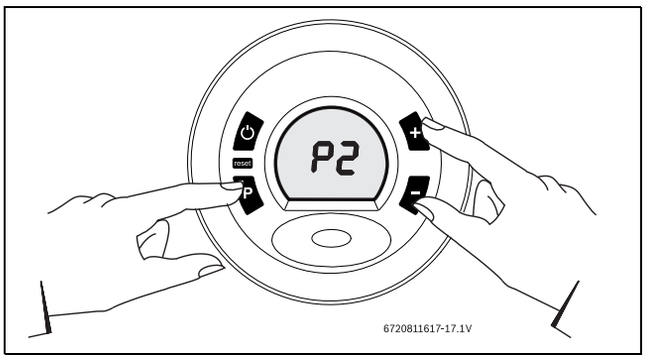

Fig. 27

- Press P to enter P2 adjustment. The current setting will appear on the display (factory default).
- Press + or − to choose the fan speed suitable with your installation, see table 23 and table 24.
- Press and hold (± 5 sec.) “Program” button P until the display flashes, then the selected value is memorized.

Proceed directly to chapter 7.4 to confirm CO_2 values are within range.

Adjusting maximum power fan speed (P1)

To select fan speed:

- Press ON/OFF button into ON.
- Immediately following, press and hold simultaneously buttons + or − and P for 3 seconds, until display reads P2.

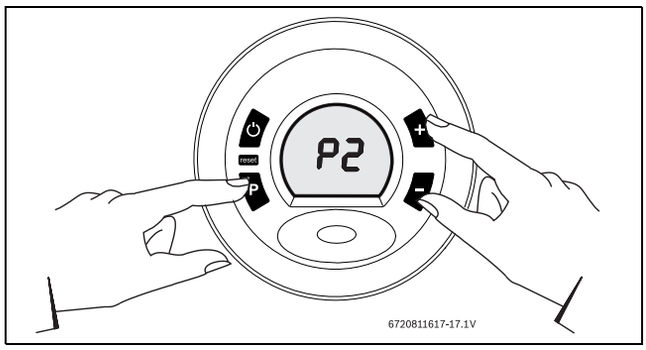

Fig. 28

- Press the minus button − to display P1.
- Press “Program” button P to enter P1 adjustment. The current setting will appear on the display.
- Press + or − to choose the fan speed suitable with your installation, see table23 and table 24.
- Press and hold (± 5 sec.) “Program” button P until the display flashes, then the selected value is memorized.

Proceed directly to chapter 7.4 to confirm CO_2 values are within range.

Attention residents of the Commonwealth of Massachusetts:

In the Commonwealth of Massachusetts the following regulation went into effect on 12/30/2005:

(a)For all side wall horizontally vented gas fueled equipment installed in every dwelling, building or structure used in whole or in part for residential purposes, including those owned or operated by the Commonwealth and where the side wall exhaust vent termination is less than seven (7) feet above finished grade in the area of the venting, including but not limited to decks and porches, the following requirements shall be satisfied:

1. INSTALLATION OF CARBON MONOXIDE DETECTORS. At the time of installation of the side wall horizontal vented gas fueled equipment, the installing plumber or gas fitter shall observe that a hard wired carbon monoxide detector with an alarm and battery back-up is installed on the floor level where the gas equipment is to be installed. In addition, the installing plumber or gas fitter shall observe that a battery operated or hard wired carbon monoxide detector with an alarm is installed on each additional level of the dwelling, building or structure served by the side wall horizontal vented gas fueled equipment. It shall be the responsibility of the property owner to secure the services of qualified licensed professionals for the installation of hard wired carbon monoxide detectors.

a.In the event that the side wall horizontally vented gas fueled equipment is installed in a crawl space or an attic, the hard wired carbon monoxide detector with alarm and battery back-up may be installed on the next adjacent floor level.

b. In the event that the requirements of this subdivision can not be met at the time of completion of installation, the owner shall have a period of thirty (30) days to comply with the above requirements; provided, however, that during said thirty (30) day period, a battery operated carbon monoxide detector with an alarm shall be installed.

2.APPROVED CARBON MONOXIDE DETECTORS. Each carbon monoxide detector as required in accordance with the above provisions shall comply with NFPA 720 and be ANSI/UL 2034 listed and IAS certified.

3. SIGNAGE. A metal or plastic identification plate shall be permanently mounted to the exterior of the building at a minimum height of eight (8) feet above grade directly in line with the exhaust vent terminal for the horizontally vented gas fueled heating appliance or equipment. The sign shall read, in print size no less than one half (1/2) inch in size, "GAS VENT DIRECTLY BELOW. KEEP CLEAR OF ALL OBSTRUCTIONS".

4. INSPECTION. The state or local gas inspector of the side wall horizontally vented gas fueled equipment shall not approve the installation unless, upon inspection, the inspector observes carbon monoxide detectors and signage installed in accordance with the provisions of 248 CMR 5.08(2)(a)1 through 4.(b)

EXEMPTIONS: The following equipment is exempt from 248 CMR 5.08(2)(a)1 through 4:

1. The equipment listed in Chapter 10 entitled "Equipment Not Required To Be Vented" in the most current edition of NFPA 54 as adopted by the Board; and

2. Product approved side wall horizontally vented gas fueled equipment installed in a room or structure separate from the dwelling, building or structure used in whole or in part for residential purposes.

(c) MANUFACTURERS REQUIREMENTS - GAS EQUIPMENT VENTING SYSTEM REQUIRED. When the manufacturer of Product Approved side wall horizontally mounted gas equipment provides a venting system design or venting system components with the equipment, the instructions provided by the manufacturer for the installation of the equipment and the venting shall include:

1. Detailed instructions for the installation of the venting system or the venting system components: and

2. A complete parts list for the venting system design or venting system.

(d)MANUFACTURER REQUIREMENTS - GAS EQUIPMENT VENTING SYSTEM NOT PROVIDED. When the manufacturer of a product approved side wall horizontally vented gas fueled equipment does not provide the parts for the venting of flue gases, but identifies "special venting systems," the following requirements shall be satisfied by the manufacturer:

1. The referenced "special venting system" instructions shall be included with the appliance or equipment installation instructions; and
2. The "special venting systems" shall be product approved by the Board, and the instructions for that system shall include a parts list and detailed installation instructions.
(e) A copy of all installation instructions for all products approved side wall horizontally vented gas fueled equipment, all venting instructions, all parts lists for venting instructions, and/or all venting design instructions shall remain with the appliance or equipment at the completion of the installation.

4.4 Combustion air requirements

CAUTION:
- In areas where outside temperatures routinely come close to freezing, sealed combustion operation is required. Use a concentric termination or separate terminations for combustion and vent, which must be installed on the same wall or roof surface, however never facing the direction of prevailing winds. Failure to do so may result in heat exchanger freezing up and bursting. This failure is not covered under the manufacturer's warranty.

CAUTION:
- When installed in an environment where corrosive chemicals or dirty air (e.g. hair salons, car washes) are present the twin pipe system is required.

Twin pipe and Concentric pipe

The water heater is designed as a sealed combustion appliance. It is recommended that the combustion air be provided by a dedicated 3” or 4” pipe from the outside (twin pipe) or by connecting to the Concentric vent kit (see Fig.8, 9 & 10). The combustion air pipe may be PVC or any other rigid sealed 3" or 4" pipe. The combustion air piping must pitch down 1/4 inch per foot towards termination to prevent rain water from entering the appliance. In twin pipe penetrations, the combustion air inlet, whether terminating vertically or horizontally, must be located in such a manner as to provide a minimum 3 foot clearance from the exhaust vent termination. See Fig.11 and 12 Letter I, page 15.
For the maximum length of the combustion air pipe, see Table 9.

CAUTION:
- Terminations must prevent rain and debris from entering the combustion air and exhaust vent piping.

Single pipe

WARNING:
- Single pipe venting is forbidden in manufactured (mobile) home installations.

Note: This appliance requires 9950 cubic feet of available combustion air, or a minimum of 1243 square feet of space with an 8 foot ceiling to operate. If the large amount of air space, which equates to about half of most average sized homes, is not available, the appliance must pull air from the outside (see twin pipe above).

Although it is permissible to draw combustion air from inside the structure, it is not the manufacturer’s recommended installation method. Always install a 3 inch elbow on the top of the combustion air inlet adaptor to prevent foreign objects from falling into the unit.
If a single pipe installation is utilized, follow guidelines below for providing adequate combustion air for the water heater as well as any other appliances that may consume air in the space. Always follow local codes if they are more stringent.

This Installation Manual specifies the minimum vertical vent pipe and the amount of combustion air required for this unit. When all requirements are followed, the unit will operate properly and safely. However, there may still be a risk of freezing due to negative draft if the other combustion appliances in the building are not supplied with sufficient combustion air. A wood stove or furnace can pull its combustion air from the heater's vent pipe, allowing the cold incoming air to freeze the cold water in the heat exchanger. Supplying more combustion air for all combustion appliances is the solution. A HVAC specialist should be consulted to design solutions for providing more combustion air. Observe the following guidelines:

Installations in structures that have been tightly constructed (air infiltration rate of 0.40 ACH or less) must be provided with combustion air per the National Fuel Gas Code. Consult a HVAC specialist if your air infiltration rate is questionable.

The space must have two permanent openings, one commencing within 12 inches of the top and one commencing within 12 inches of the bottom of the enclosure.

- **Appliances located in unconfined spaces:**
  - **a)** An unconfined space is one whose volume is greater than 50 cubic feet (1.42 cubic meter) per 1000 BTU/hr (292.81 Watts) of the combined rating of all appliances installed in the space. That would be 9950 cubic feet (281.8 cubic meters) for the water heater alone.
  - **b)** In unconfined spaces in buildings of conventional frame, masonry, or metal construction, infiltration air is normally adequate to provide air for combustion.
- **Appliances located in confined spaces:**
  The confined space must be provided with two permanent openings, one commencing within 12 inches (304.8mm) of the top and one commencing within 12 inches (304.8mm) of the bottom of the enclosure. Each opening must have a minimum free area of one square inch per:
  - 1000 BTU/hr (292.81 Watts) if all air is taken from inside the building
  - 2000 BTU/hr (585.62 Watts) if all air is taken from the outside by horizontal ducts
  - 4000 BTU/hr (1171.24 Watts)if all air is taken from the outside by direct openings or vertical ducts

Or the confined space must be provided with one permanent opening or duct that is within 12 inches (304.8mm) of the ceiling of the enclosure. This opening must have a minimum free area of one square inch per:
- 3000 BTU/hr (878.43 Watts) if all air is taken from the outside by a direct opening or vertical duct.

Louvers, grills and screens have a blocking effect, when used, increase the sizes of your openings by 300% for wood louvers (as wood type will reduce the free air by 75%) and 43% for metal louvers (as metal will reduce the free air by 30%). Refer to the National Fuel Gas Code for complete information. In buildings of tight construction all air should be taken from outside.

4.5 Proper location for installing your heater

Carefully select the location of the water heater. For your safety and for proper heater operation, you must provide combustion air to the heater and a proper exhaust vent system.
Follow the guidelines below:

- **1.** Locate the heater where venting, gas and plumbing connections are feasible and convenient.
- **2.** The hot water lines should be kept short and insulated to save energy. Centrally locating the water heater is recommended to keep hot water distribution times even throughout the structure.

NOTICE: Risk of appliance freezing!

- The water in this water heater is cold and always remains cold except for the times the burner is on. In the event of power outage in conjunction with freezing temperatures, it is recommended that the heater be drained.
  See chapter 7.2, page 37 “Winterizing” for draining instructions.

WARNING:

- Flammable materials, gasoline, pressurized containers, or any other items or articles that are potential fire hazards must NOT be placed on or adjacent to the heater. The appliance area must be kept free of all combustible materials, gasoline and other flammable vapors and liquids.

4.6 Heater placement and clearances

The water heater design is approved for installation on a combustible wall (see chapter 4.7 Mounting installation) provided the floor covering below the heater is noncombustible.
For installations in an alcove or closet, maintain the minimum clearances to combustible and non-combustible materials. See fig. 6, page 10.

4.7 Hanging appliance on the wall

WARNING: Severe personal injury and property damage!
Before mounting appliance:

- Check that there are no loose or damaged parts inside the appliance.
- Confirm that the gas type of the heater matches the gas supply you will be connecting the heater, see Fig.2, page 8.

Front cover should be removed (see instructions on page 8) in order to inspect components visually.

WARNING:

- Do not install this appliance on a carpeted wall. The heater must be mounted on a wall using appropriate anchoring materials.

NOTICE: Risk of appliance freezing!

- In areas where outside temperature is routinely below 32°F (0 °C) and the heater is to be installed on the inside of an exterior wall, a minimum 2" air gap or rigid insulation between the heater back and the wall is recommended.

If wall is sheathed with plaster or drywall, it is recommended that two support boards, either 1"x 4" or 1/2" (minimum) plywood first be attached across a pair of studs, see fig. 29, page 25.

- Secure the wall mounting bracket provided with the heater to a wall surface. The heater must be kept level on the wall surface, see fig. 30, page 25.
- Hang the appliance on the bracket, see fig. 31, page 26.

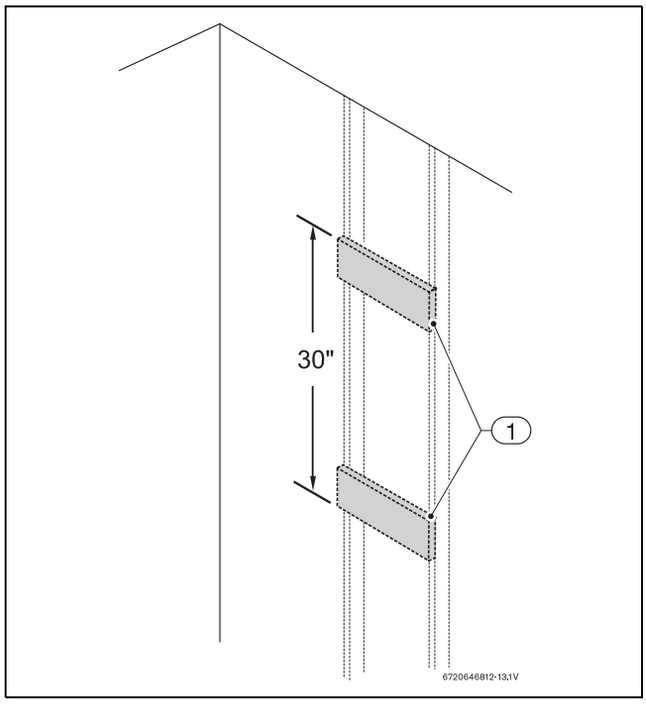

Fig. 29 Distance between support boards

[1] Studs 16" (406mm) on center

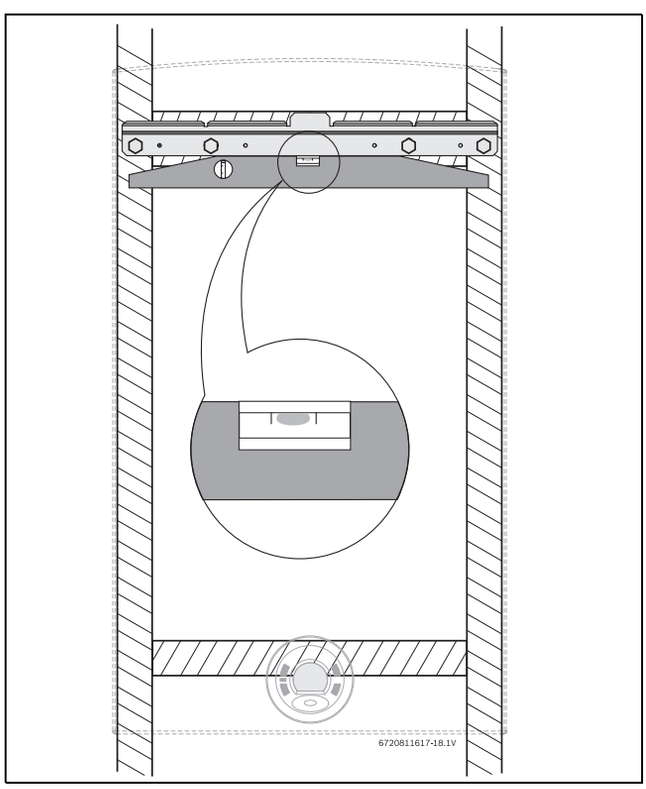

Fig. 30 Leveling wall mounting bracket

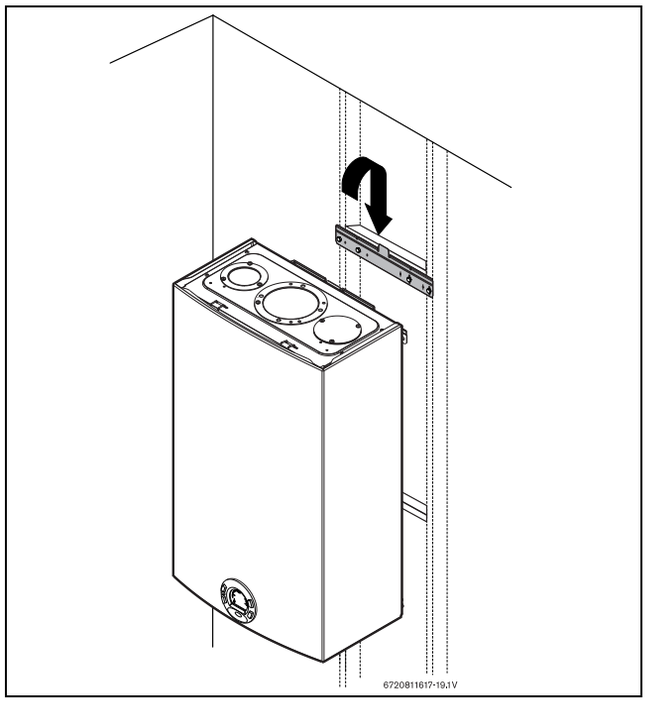

Fig. 31 Mounting the heater

CAUTION: Personal injury and property damage.
- Appliance must be installed vertically.

4.8 Mounting installation

When installing this appliance the unit must be additionally secured at the bottom of the water heater as shown in fig. 32. Use the included screws to secure the brackets at the bottom of the water heater to the wall. If the wall is sheathed with plaster or drywall, it is recommended that a support board be first attached across a pair of studs at the bottom of the unit as shown in fig. 29.

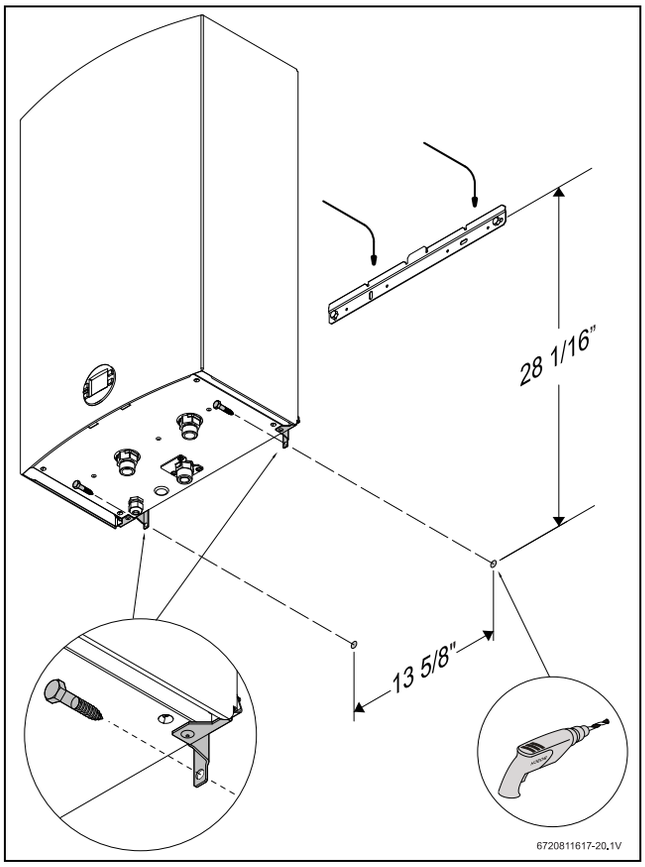

Fig. 32 Mounting the heater

4.9 Gas piping & connections

Before connecting the gas supply, check the rating plate on the right side of the heater to be sure that the heater is rated for the same gas to which it will be connected. Example rating plate can be found in fig. 2, page 8.
In the United States: The installation must conform with local codes or, in the absence of local codes, the National Fuel Gas Code ANSI Z223.1/ NFPA 54.
In Canada: The Installation must conform to CGA B149 INSTALLATION CODES and/or local installation codes.

DANGER: Explosion hazard!
- ▶ DO NOT connect to an unregulated or high pressure propane line or to a high pressure commercial natural gas line.

DANGER: Explosion hazard!
- ▶ The heater must be isolated from the gas supply piping system during any pressure testing of that system at test pressures equal to or more than 0.5 psig. If overpressure has occurred, such as through improper testing of the gas lines or malfunction of the supply system, the gas valve must be checked for safe operation.

GAS CONNECTIONS

- ▶ Install a manual gas shut off valve on the gas supply line within easy reach of the appliance.
- ▶ Install a union when connecting gas supply.
- ▶ The minimum internal diameter required for any appliance connector is ¾ ", see chapter 4.9.1 for more details on pipe sizing.
- ▶ Undersized flexible appliance connector not permitted.
- ▶ National Fuel Gas Code requires that a sediment trap (drip leg) be installed on gas appliances not so equipped. The drip leg must be accessible and not subject to freezing conditions. Install in accordance with the recommendations of the serving gas supplier, see fig. 2.

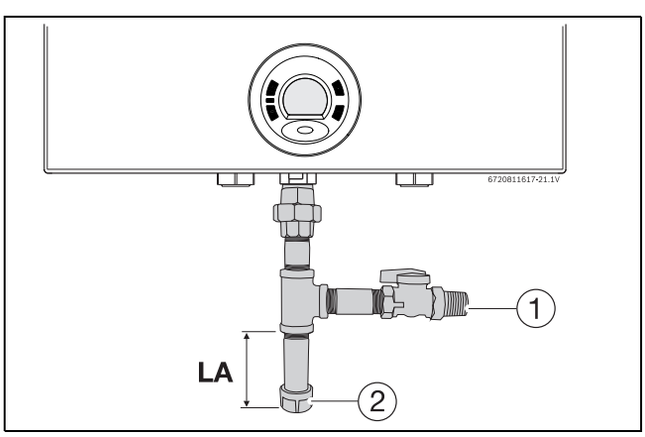

Fig. 33 Gas connection

[1] Gas supply
[2] Cap
[LA] Minimum 3"

Once connections are made, check for gas leaks at all joints. Apply some gas leak detection solution to all gas fittings. Bubbles are a sign of a leak. A combustible gas detector may also be used to detect for leaks.

DANGER: Explosion hazard!
- ▶ If you detect a leak, shut off the gas. Tighten appropriate fittings to stop leak. Turn the gas on and check again with a gas leak detection solution. Never test for gas leaks using a match or flame.

GAS LINE SIZING

The gas supply piping for a single heater should be sized for a maximum draw of 199,000 BTU/hr. Measure the length of gas supply line from the building's gas main to the heater and use the chapter 4.9.1 and 4.9.2, page 28 or the gas line manufacturer's sizing tables to determine the pipe diameter necessary. If there are more gas drawing appliances on the line, size the gas line according to the total maximum amount of BTU draw input rating of for all appliances combined.

Note: Undersizing the gas line may result in diminished hot water flow rate and temperature. See chapter 4.14, page 32 for the procedure to measure gas pressure. Proper gas pressure must be confirmed at time of installation.

4.9.1 Gas Line Sizing Tables for NATURAL GAS

For your convenience see below for an excerpt from gas line sizing tables for a single NG appliance. For details see the current NFPA 54.

Specified pipe lengths are for one RTG 199ME, which has a maximum input rating of 199,000 BTUs. The gas supply system must be sized for the combined total maximum BTU/hr load requirements of all gas appliances running simultaneously.

The tables below show the maximum capacity of the gas supply pipe in cubic feet per hour. Please contact your local gas supplier for the energy content of the gas to determine the BTU/hr capacity. Use 1,000 BTU/cubic foot for rough estimations.

Maximum pipe capacity in cubic feet of Natural Gas per hour for gas pressures of 14" W.C. (0.5 psig) or less and a pressure drop of 0.3" W.C. (0.75mbar) based on 0.60 specific gravity gas).

Nominal Iron Pipe Size, inches	Internal Diameter inches	Length of Black iron Pipe (Schedule 40 Metallic Pipe), Feet									
		10	20	30	40	50	60	70	80	90	100
3/4	0.824	273	188	151	129	114	104	95	89	83	79
1	1.049	514	353	284	243	215	195	179	167	157	148
1-1/4	1.380	1060	726	583	499	442	400	368	343	322	304
1-1/2	1.610	1580	1090	873	747	662	600	552	514	482	455

Table 25

Maximum pipe capacity in cubic feet of Natural Gas per hour for gas pressures of <2.0 psig (55" WC or 138 mbar) and a pressure drop of 3.0" W.C. (7.5 mbar) based on 0.60 specific gravity gas).

Nominal Iron Pipe Size, inches	Internal Diameter inches	Minimum Gas Pressure 8.0" WC (20 mbar) Length of Black Iron Pipe (Schedule 40 Metallic Pipe), Feet									
		10	20	30	40	50	60	70	80	90	100
1/2	0.622	454	312	250	214	190	172	158	147	138	131
3/4	0.824	949	652	524	448	397	360	331	308	289	273
1	1.049	1787	1228	986	844	748	678	624	580	544	514

Table 26

Maximum pipe capacity in cubic feet of Natural Gas per hour for gas pressures of 14" W.C. (0.5 psig or 25 mbar) or less and a pressure drop of 0.5" W.C. (1.25mbar) based on 0.60 specific gravity gas).

Tube size, inches	EHD*	Length of Corrugated Stainless Steel Tubing (CSST), Feet									
		10	20	30	40	50	60	70	80	90	100
1	30	330	231	188	162	144	131	121	113	107	101
1	31	383	269	218	188	168	153	141	132	125	118
1 - 1/4	37	639	456	374	325	292	267	248	232	219	208
1 - 1/4	38	746	526	442	386	347	318	295	277	262	249

Table 27

* EHD = Equivalent Hydraulic Diameter. The greater the value of EHD, the greater the gas capacity of the tubing.

4.9.2 Gas Line Sizing Tables for LP GAS

For your convenience see below for an excerpt from gas line sizing tables for a single LP appliance. Their intended use of is for pipe sizing between the 2nd stage (low pressure) regulator and the appliance. For details see the current NFPA 54 or NFPA 58.

Specified pipe lengths are for one RTG 199ME which has a maximum input of 199,000. The gas supply system must be sized for the combined total maximum BTU/hr load requirements of all gas appliances running simultaneously.

The tables below show the maximum capacity of the gas supply pipe in thousands of BTU per hour of Undiluted LP Gas at 11" W.C (0.4 psig or 27.4 mbar) based on a pressure drop of 0.5" W.C (1.25 mbar).

Nominal Iron Pipe inches	Internal Diameter inches	Length of Black iron Pipe, Feet							
		10	20	30	40	50	60	80	100
1/2	0.622	291	200	160	137	122	110	101	94
3/4	0.824	608	418	336	287	255	231	212	197
1	1.049	1150	787	632	541	480	434	400	372

Table 28

Tube size, inches	EHD*	Length of Corrugated Stainless Steel Tubing (CSST), Feet									
		10	20	30	40	50	60	70	80	90	100
3/4	23	254	183	151	131	118	107	99	94	90	85
3/4	23	303	216	177	153	137	126	117	109	102	98
1	30	521	365	297	256	227	207	191	178	169	159
1	31	605	425	344	297	265	241	222	208	197	186

Table 29

* EHD = Equivalent Hydraulic Diameter. The greater the value of EHD, the greater the gas capacity of the tubing.

Nominal Iron Pipe inches	Internal Diameter inches	Length of Semirigid (soft) Copper ACR Tubing, Feet				
		10	20	30	40	50
5/8	0.527	188	129	104	89	79
3/4	0.652	329	226	182	155	138

Table 30

Maximum Capacity of Semi-Rigid (flexible, non corrugated) Tubing in Thousands of BTU/hr of Undiluted Liquefied Petroleum Gases (at 11 inches Water Column Inlet Pressure).(Based on a Pressure Drop of 0.5 Inch Water Column)* Source National Fuel Gas Code NFPA 54, ANSI Z223.1 - No Additional Allowance is necessary for an ordinary number of fittings.

4.10 Water connections

NOTICE:

- This heater is not approved for preheated water applications exceeding 140°F (60°C).

NOTICE:

- In applications where inlet water temperature can exceed 140°F (60°C), a 3-way valve or mixing valve must be installed before the appliance to prevent water exceeding 140°F (60°C) from entering the appliance.

- When facing the heater, the ¾ ” cold connection is on the bottom right and the hot connection is on the bottom left. Centrally locating the water heater is recommended to keep hot water distribution times even throughout the structure.

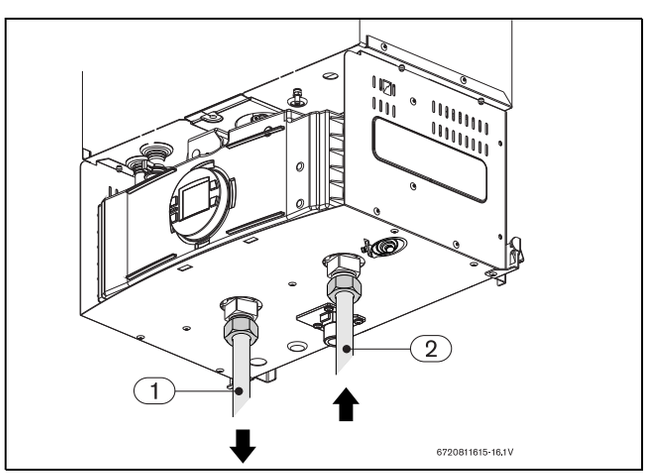

Fig. 34

[1] Cold connection
[2] Hot connection

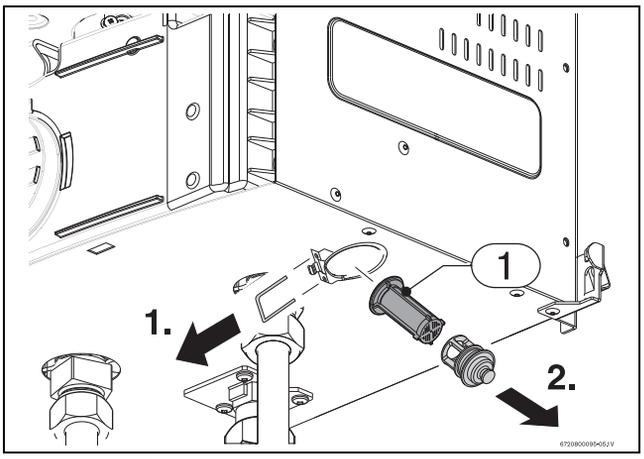

Fig. 35 Water filter

[1] Water filter

- The use of unions when connecting both water pipes to the inlet and outlet connections is required. This will facilitate any necessary servicing.
- Plastic or PEX type plumbing line materials are not suitable for connecting directly to the water heater.
- Never sweat any piping directly to or beneath the water connections, as damage will occur to the internal water valve from heating of the pipe.
- Keep water inlet and outlet pipes to no less than ¾" (19.05mm) diameter to allow the full flow capacity.
- If the cold and hot connections to the heater are reversed, the heater will not function. Be certain there are no loose particles or dirt in the piping. Blow out or flush the lines before connecting to the water heater.
- Full port shutoff valves should be installed on both the cold water supply and hot water outlet lines to facilitate servicing the heater (see fig. 36).
- For installation on a private well system with the use of a pressure tank, the lowest pressure range setting recommended is 40-60 psi (2.75 - 4.15bar).

4.11 Water quality

Water quality can have an impact on appliance longevity and may void the manufacturer's warranty.
For water analysis data call your local water department, or if on a well, have well water analyzed periodically. If water quality exceeds one or more of the values specified below, consulting a local water treatment professional for water softening/conditioning options is recommended.

Description	Max. Levels	
pH	pH	6.5 - 8.5
TDS (total Dissolved Solids)	mg/l or ppm	500
Total hardness	mg/l or ppm	100 (6 grains)
Aluminum	mg/l or ppm	2.0
Chlorides	mg/l or ppm	250
Copper	mg/l or ppm	1.0
Iron	mg/l or ppm	0.3
Manganese	mg/l or ppm	0.05
Zinc	mg/l or ppm	5.0

Table 31

Connecting the pressure relief valve (PRV)

A listed pressure relief valve must be installed at the time of installation. No valve is to be placed between the PRV and the heater. No reducing coupling or other restriction may be installed in the discharge line. The discharge line must be a minimum of 4” above a drain and installed such that it allows complete drainage of both the PRV and the line. The discharge line must be placed where it will not cause any damage.
The location of the PRV must be readily accessible for servicing or replacement, and be mounted as close to the water heater as possible. See fig. 36. To install the PRV, a suitable fitting connected to an extension on a “T” fitting can be sweated to the hot water line. Support all piping.

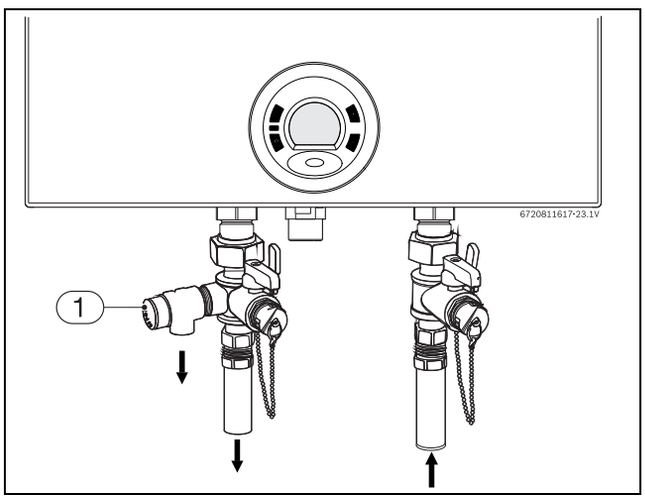

Fig. 36 Plumbing Connections (with shutoff valves) and Pressure Relief Valve

4.12 Domestic hot water recirculation

Although recirculation directly through the tankless water heater is allowed, temperature stability is improved by recirculating through a tank as shown in fig. 37. By using the design in fig. 37, there is no recirculation of hot water through the tankless water heater and therefore, does not affect the heat exchanger warranty. Direct recirculation through the tankless water heater is permissible, however, the heat exchanger warranty is reduced; contact manufacturer for further installation requirements. The following drawing is provided to outline one possible recirculation design using the water heater in conjunction with an electric storage tank. This schematic is for illustration only and must not be used for actual Installation without appropriate engineering and technical advice from a properly licensed professional in the locality where the installation is made.

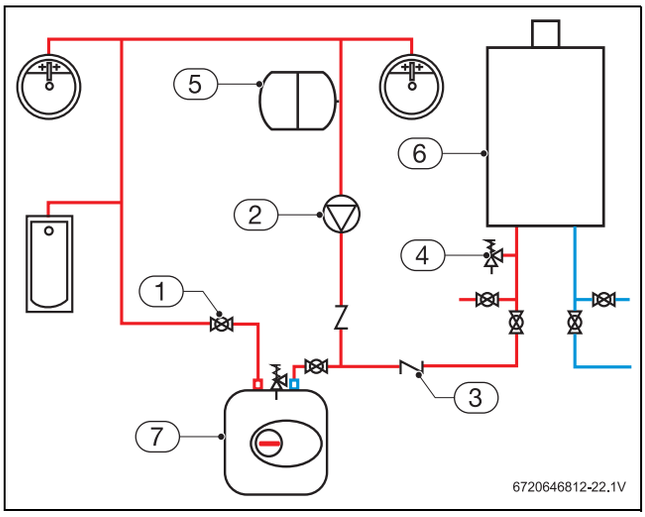

Fig. 37 Recirculation application

[1] Full port isolation valve
[2] Circulator pump on timer
[3] Check valve
[4] PRV
[5] Expansion tank
[6] Tankless water heater - RTG 199ME
[7] Electric storage tank

The use of a small electric tank after heater (4-6 gallon size) should be used for this application and designed so the pump will circulate the water through the tank and the building's hot water return loop only. Timed or thermostatically controlled operation of the pump is commonly done. Contact manufacturer if further information is needed.

4.13 Space heating applications

CAUTION:
- If the set point temperature is above 120°F, precautions should be taken to protect users of potable water from scalding.

CAUTION:
- Propylene glycol may be used for freeze prevention ONLY on the space heating side of the heat exchanger. Do not use ethylene glycol (automotive antifreeze).

CAUTION:
- The use of a flow switch is recommended to ensure DHW priority and to prevent “cold-blow” situations when the tankless water heater is used with an air-handling system. The flow switch should be used to disable the blower on the air-handling system when domestic water is used.

CAUTION:
- Ensure the primary pump is properly sized to provide adequate flow for the system heat load. Ensure the primary pump is properly sized to provide adequate flow for the system heat load.

For Pump sizing please refer to the pressure drop curves, fig. 38. Also remember to account for system piping pressure loss. A minimum of 1.7 GPM is recommended to provide adequate flow through the water heater when determining the size of the primary pump.

Bradford White tankless water heaters are approved for use in combination DHW and space heating applications (open-loop setup). These water heaters are not approved for use in space heating only applications (closed-loop setup). Applications of combination DHW and space heating in an open loop configuration is acceptable if plumbed similar to fig. 39. Use of this tankless water heater in a combination DHW and space heating application will result in the product warranty being reduced to 3 years.

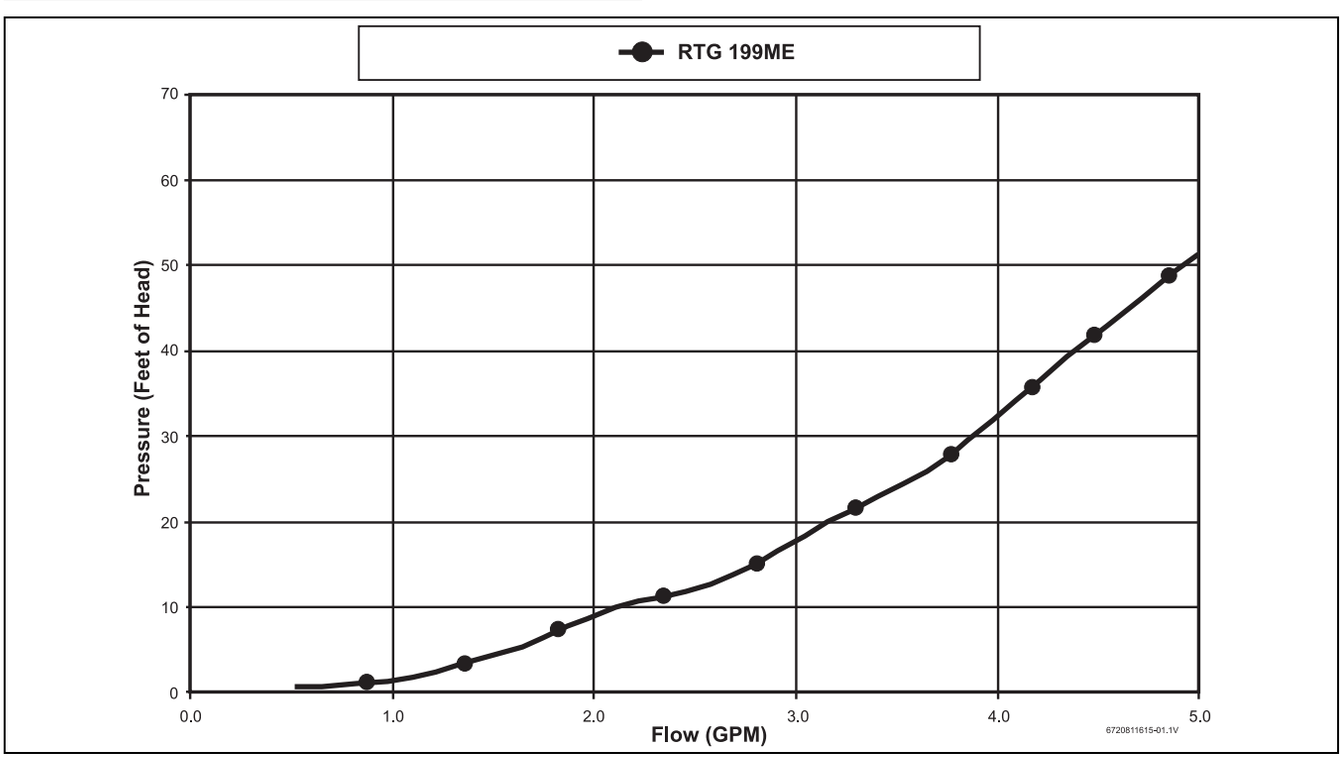

Fig. 38 Pressure drop curve

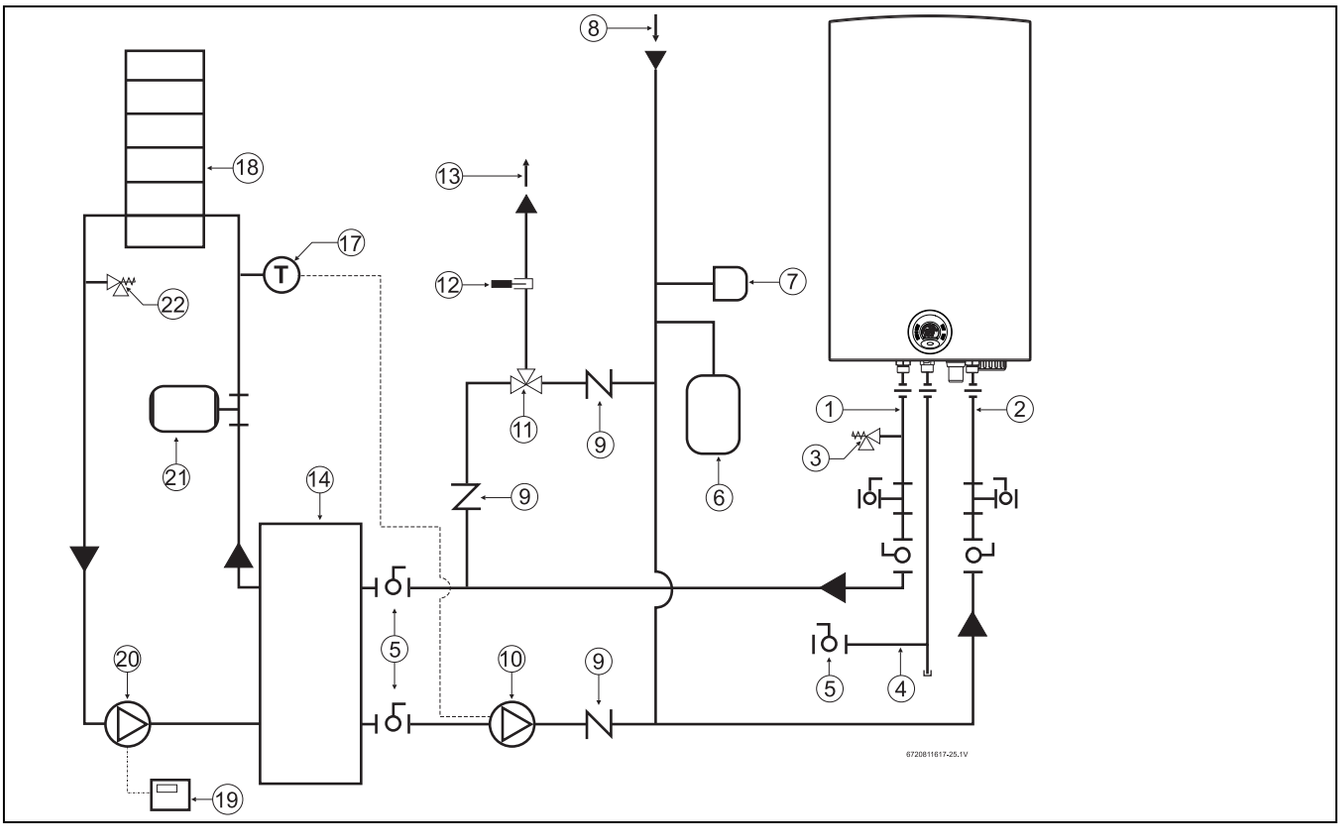

Fig. 39 Space heating diagram

[1] Hot water outlet
[2] Cold water inlet
[3] Pressure relief valve
[4] Gas supply
[5] Shut off gas valve
[6] Thermal expansion tank (as required)
[7] Atmospheric vacuum breaker
[8] Cold inlet
[9] Check valve
[10] Pump
[11] Thermostatic mixing valve
[12] Thermometer (optional)
[13] DHW outlet
[14] Water to water heat exchanger
[17] Thermostat
[18] Space heating zone
[19] Zone controller
[20] Space heating pump
[21] Expansion tank
[22] Pressure relief valve

4.14 Measuring gas pressure

Confirm gas pressure upon installation.

Connecting manometer

- Shut off gas supply at installer supplied shutoff valve for this water heater.
- Remove front cover and locate inlet gas pressure test port (see Fig.41).
- Loosen screw inside left test point fitting (do not remove) and connect manometer tube to test point.

Static Pressure Test

- Turn gas supply back on.
- Record static gas pressure reading in table 33.

Operating Pressure Test

- Press ON/OFF button into ON.
- Immediately following, press and hold simultaneously buttons + or − and P for 3 seconds, until display reads P2.

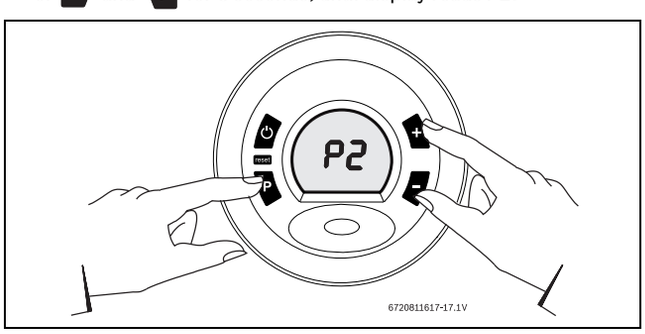

Fig. 40

- Press P to enter P2 adjustment. The current setting will appear on the display (factory default).
- Press + or − until P1 appears.

Note: While in this mode the appliance will run constantly at maximum power and allow maximum water flow.

For inlet gas pressure adjustment consider the following table:

Gas type	NG	LPG
p_{in}	3.5” WC	8” WC

Table 32 Minimum inlet gas pressure under full operation

- Operate all other gas appliances (except heater) on same gas piping system at maximum output.
- Turn on high volume of hot water flow (at least 6 gpm) (1tub and 2 sinks should be sufficient) and burner will light. If heater display reverts to P2, open more hot water fixtures to allow sufficient flow. Press + until P1 reappears on the display.

▶ Record lowest operating gas pressure reading in table 33.

Gas pressures lower than 3.5" W.C. for Natural Gas or 8" W.C. for LPG will result in insufficient degree rise to the hot water being used, reduced hot water volume, possible error code faults and must be corrected. See Gas Connections, chapter 4.9, page 27.

P1 fan speed:
Factory default: NG: 54, LP: 46
Lowering P1 fan speed reduces the maximum BTU input.
As a temporary measure if the gas pressure in P1 is below specification, lower P1 fan speed incrementally until minimum inlet gas pressure reaches specified range (table 32). After upgrading gas line, reset appliance to P1 factory default setting (NG: 54, LP: 46) or setting from Section 4.3.8.

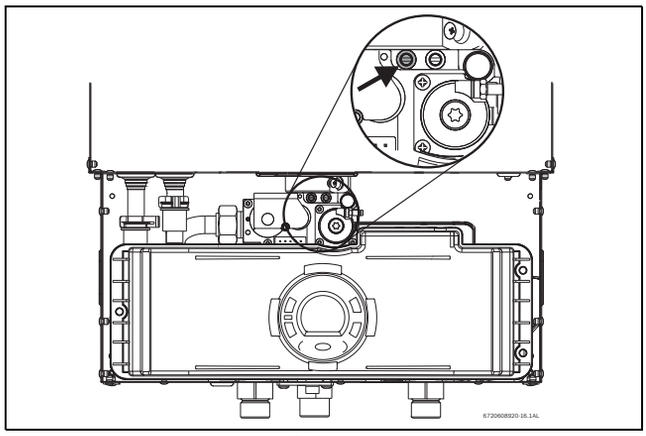

Fig. 41 Gas pressure test port (left tapping)

Static Gas Pressure Reading (see chapter 4.14) **enter here: _____ Date: _____**
Operating Gas Pressure Reading (see chapter 4.14) **enter here: _____ Date: _____**

Table 33

5 Electrical connections

5.1 Electrical power supply

WARNING:
▶ For safety reasons, disconnect the power supply cord to the heater before any service or testing is performed.

WARNING:
▶ This heater must be electrically grounded in accordance with the most recent edition of the National Electrical Code. NFPA 70. In Canada, all electrical wiring to the heater must be in accordance with local codes and the Canadian Electrical Code, CSA C22.1 Part 1. Do not rely on the gas or water piping to ground the metal parts of the heater.

The water heater requires an electrical power supply from a 120VAC / 60Hz properly rated receptacle and must be properly grounded.
The heater is wired as shown in the wiring diagram (chapter 10, Fig.66).

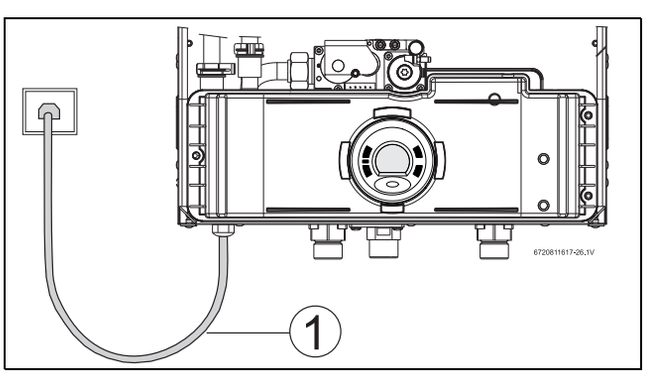

Fig. 42 Connecting power supply cord

[1] Power cord length: 3ft.

Note: The outlet the appliance is plugged into should be clear from possible water damage.

5.2 Position of the fuses in control unit

To check fuses, proceed as follows:

▶ Remove the front cover, see fig. 4, page 9.
▶ Remove the three screws from the control unit.

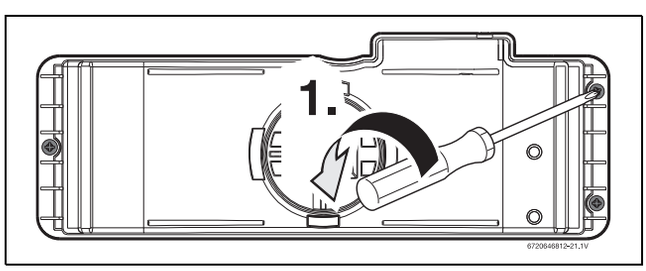

Fig. 43

▶ Remove the six screws from the back cover of the control unit, see fig. 44, pos. 2.

▶ Check the fuses in the printed circuit board, see fig. 44, pos. 3.

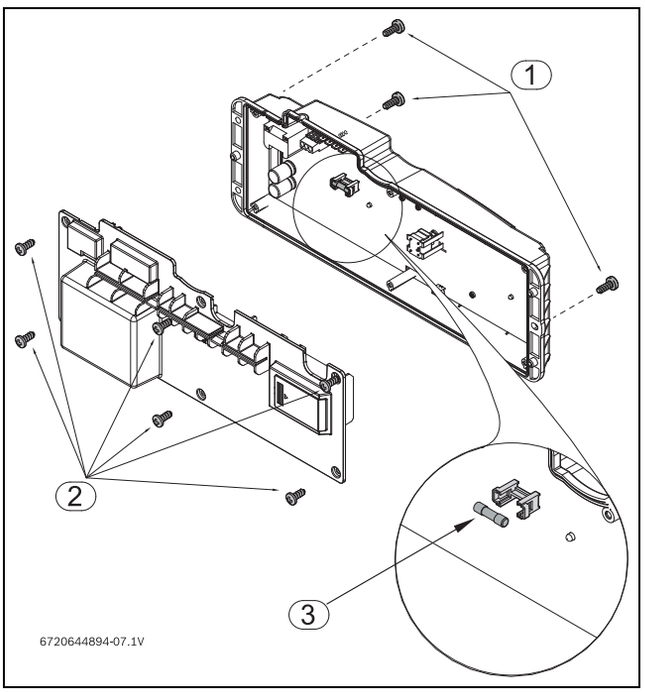

Fig. 44 Fuses position

▶ After checking the fuses, reinstall all parts in reverse order.

6 Operation instructions

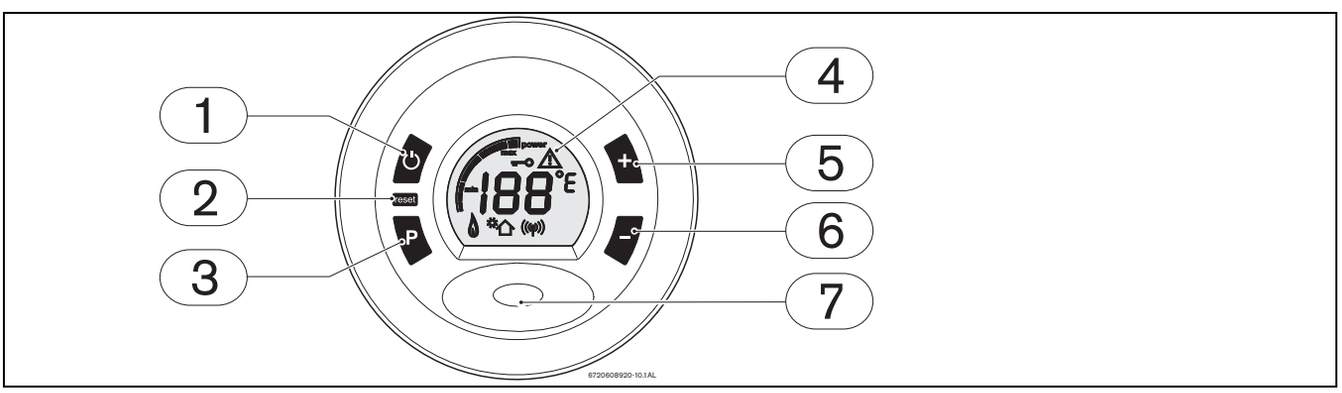

Fig. 45

[1] On/Off button
[2] Reset button
[3] Program Key
[4] LCD display
[5] Up button
[6] Down button
[7] Power On or stand-by LED

6.1 Description LCD Display

WARNING:

▶ Do not use any cleaning aggressive or corrosive agents to clean the window.

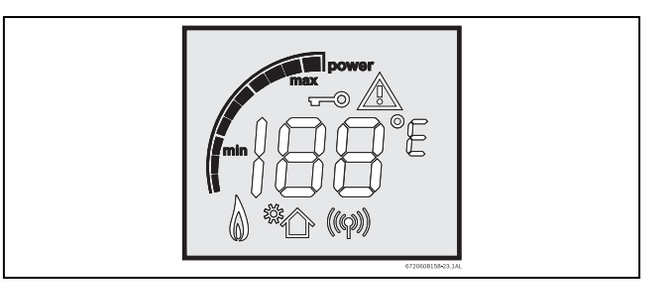

Fig. 46 Power bar indicator (input)

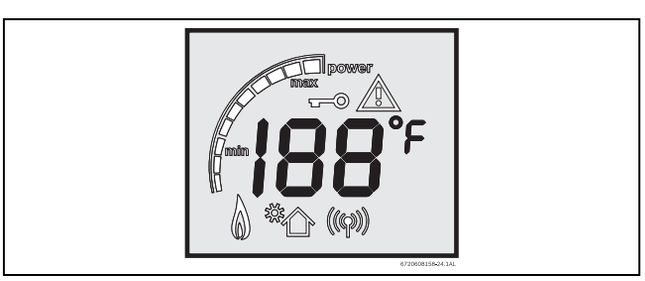

Fig. 47 Temperature indicator

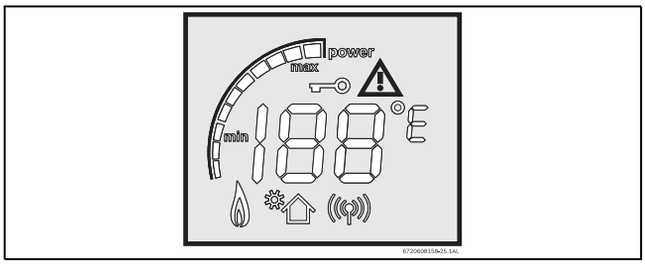

Fig. 48 Error indicator

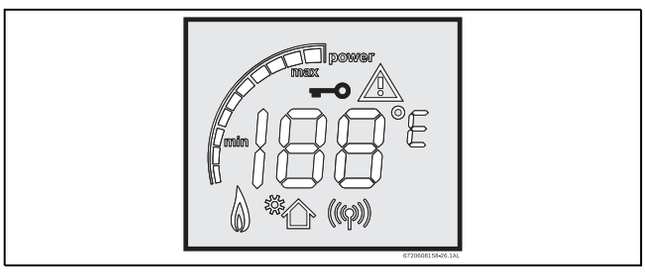

Fig. 49 Locked condition indicator (only with remote control)

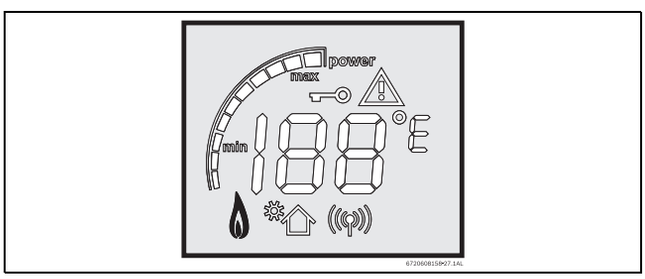

Fig. 50 Flame indicator

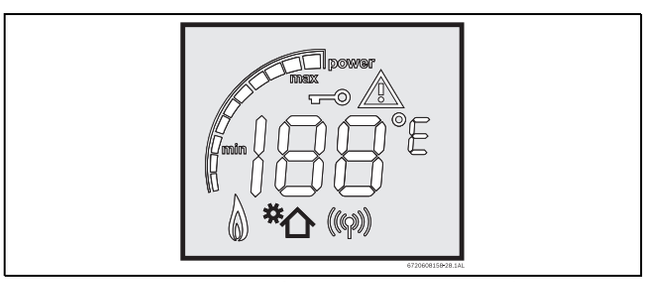

Fig. 51 Solar mode indicator (see chapter 6.4, page 35)

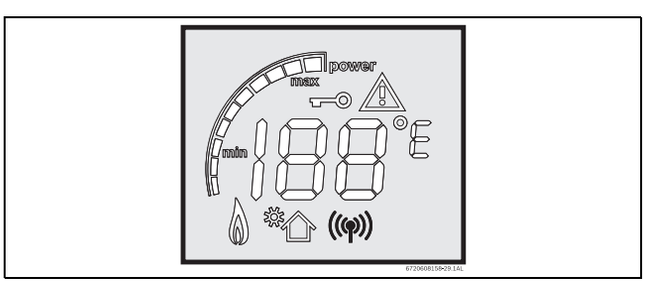

Fig. 52 Remote control indicator

6.2 For your safety read before operating your water heater

DANGER: Explosion hazard!

- ▶ If you do not follow these instructions exactly, a fire or explosion may result causing property damage, personal injury or loss of life.

A. This appliance is equipped with electronic ignition for lighting the main burner. When turning the heater on, follow these instructions exactly.

WHAT TO DO IF YOU SMELL GAS

- ▶ Turn off the gas shut-off valve.
- ▶ Open windows and doors.
- ▶ Do not try to light the appliance.
- ▶ Do not touch any electrical switch, telephone, and do not use outlets.
- ▶ Extinguish all open flames. Do not smoke! Do not use lighters!
- ▶ Warn all occupants of the building. Do not ring doorbells!
- ▶ If you can hear gas leaking, leave the building immediately.
- ▶ Prevent others from entering the building and notify the police and fire department from outside the building.
- ▶ From outside the building, call the gas utility company and a trained and certified installer.

B. Use only your hand to press the on/off control switch. Never use tools. If control switch is jammed, close the gas supply and call a qualified service technician. Forceful repair may result in a fire or explosion.
C. Do not use this appliance if any part has been under water. Immediately call a qualified service technician to inspect the appliance and to replace any part of the control system and any gas control which has been under water.

6.3 Power

On

- ▶ To start the appliance press the On/Off button.

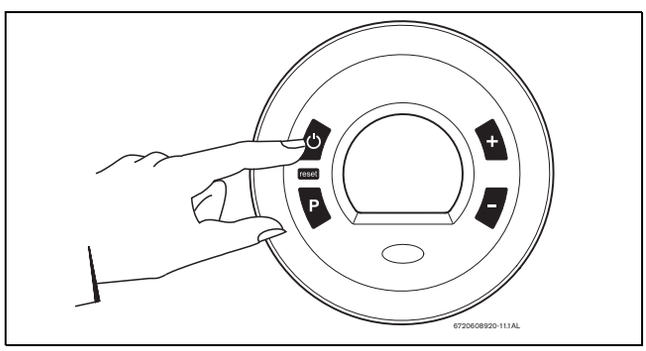

Fig. 53

Off

- ▶ To shut down the appliance press the On/Off button again.

6.4 Temperature selection

To select hot water temperature:

- ▶ Press buttons + or − in order to reach desired temperature.

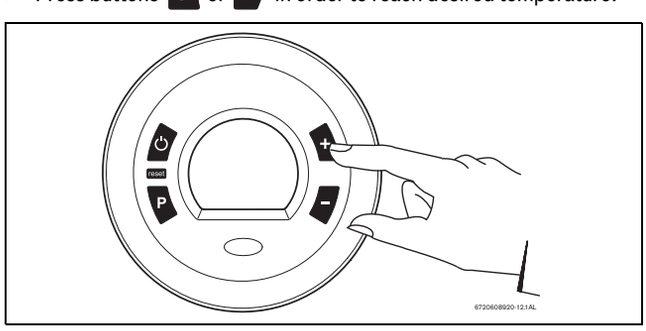

Fig. 54

Setting the water temperature

The desired temperature of the hot water can be adjusted on the front control panel of the heater.
The water heater has an electronically controlled gas valve that modulates the burner input in response to both varying hot water flow rates and/or changes in any incoming and outgoing water temperatures.

Note: The water heater, running at minimum BTU, may still achieve temperatures above the desired set temperature. Low flowing fixtures are the leading cause of this type of temperature overshoot. To combat

this symptom, clean fixtures or replace with higher flowing ones if necessary.

Saving water resources:

- ▶ Make sure you close all the taps after any use. Avoid leaving the taps dripping. Repair any leaking tap.
- ▶ Define the temperature you want, in the appliance or with the remote control. This way you have the precise water flow needed (mixing cold water to regulate temperature will increase the water flow with consequent waste of water).

The water heater will not ignite if inlet water temperature exceeds the set point temperature less 9 °F (5 °C). In this condition, the solar mode indicator will show on the LCD display. See fig. 51, page 35.

Solar mode activation formula	Example:
Temp. inlet > Temp. set - 9 °F (5 °C)	104 °F (40 °C) > 112 °F (44 °C) - 9 °F (5 °C)

Table 34

WARNING: Appliance damage!

- ▶ In applications where inlet water temperature can exceed 140°F (60°C), a thermostatic or mixing valve must be installed before the appliance to prevent water exceeding 140°F (60°C) from entering the appliance.

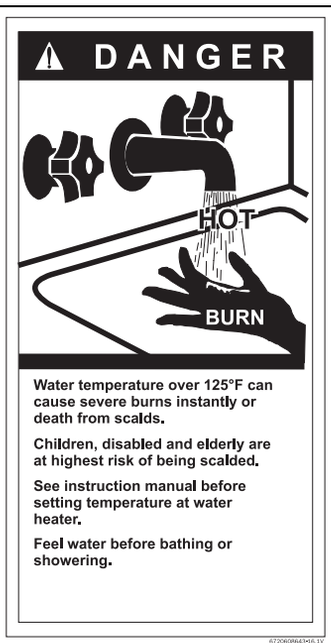

Fig. 55

6.5 Operation

- ▶ When a hot water tap is opened, main burner ignites and LCD displays indication .

Fig. 56

- ▶ LCD flashes until selected temperature is reached.
- ▶ Power bar indicates power percentage in use.

6.6 Reset button

If the LCD shows the error symbol ⚠ do not shut off power or unplug the heater. Follow instructions below to reset error first.
Record the error code on LCD and consult "Problem solving" chapter 9.1, page 44.

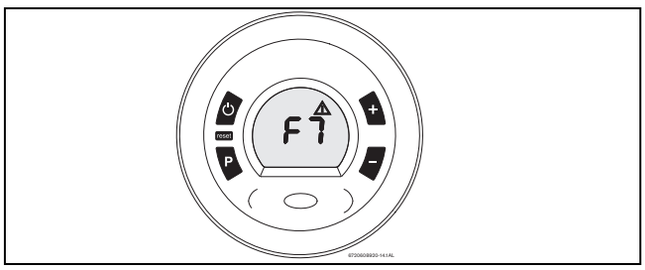

Fig. 57

After following instructions indicated in "Troubleshooting" section,

- ▶ press reset button firmly in order to return heater to normal operation.

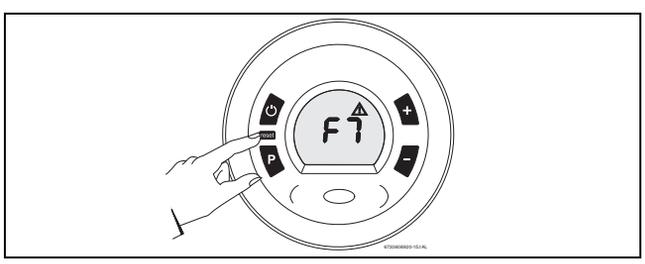

Fig. 58 Reset button

If the problem persists, contact your installer.

6.7 Program button

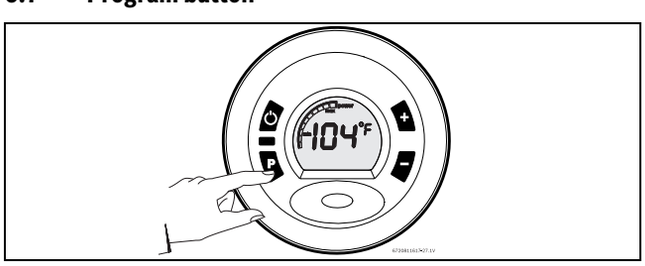

Fig. 59 "Program" key

6.7.1 Memorizing selected temperature

- ▶ Press buttons + or − to select desired temperature.
- ▶ Hold "Program" button for 3 seconds to save temperature.

When LCD stops blinking, temperature is saved in memory.

Using "Program" function

In order to select memorized temperature

- ▶ Press "Program" key.

LCD shows pre-memorized temperature, which is now the hot water selected temperature.

6.8 Locked condition

This condition is only valid for appliances with one or more remote controls installed.

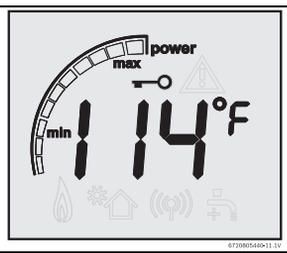

Fig. 60 Locked condition

Whenever LCD shows , the temperature setting cannot be adjusted because the appliance is in use by a user which already selected a different temperature. Appliance will be automatically unlock 5 minutes after closing hot water tap.

7 Maintenance and service

DANGER:
- ▶ Always shut off the electrical power supply, shut off the manual gas valve and shut off the water valves whenever servicing.

NOTICE:
- ▶ Inspect and clean the complete water heating system once a year.
- ▶ Carry out a maintenance as necessary. Immediately repair all faults to avoid damage to the system.

Annual maintenance table		
		Every year
1.	Inspect venting system	X
2.	Inspect combustion chamber	X
3.	Inspect burner	X
4.	Inspect condensate trap	X
5.	Inspect water filter	X

Table 35 Annual maintenance

7.1 Annual maintenance

(To remove front cover, see page 9.)

Venting System
- Venting system - inspect inside of flue pipe for any blockage or restriction. Observe burner flames during heater operation. (front cover must be removed). Inspect the combustion air inlet pipe for blockage or debris. Inspect combustion air and exhaust terminations for blockage or debris. Inspect the combustion chamber for blockage or debris.

Combustion Chamber
- Inspect burner observation window (Fig.70, #13, page 50) for cracks or spillage of flue gases. Observe burner flames during heater operation. Flames should be steady and blue with no signs of yellowing. Yellow burner flames are an indication of improper combustion. Refer to Section 4.4, page 24, chapter 4.3, page 11 of this manual to verify exhaust system and combustion air supply meets manufacturer's specifications

Pressure Relief
- Manually open the pressure relief valve to ensure proper operation

Inlet Water Filter
- Verify the inlet filter screen is clean and undamaged. The inlet water filter is located on the bottom of the appliance, to the right of the cold water inlet fitting. (See Fig.35, page 30). Close installer supplied water shutoff and remove wireform spring clip from filter. Remove filter, clean and or replace if damaged

Descaling
- In areas where the water supply has a high mineral content, the heat exchanger should be flushed with a descaling solution. Scale build up will shorten the life of the water heater and damage resulting from scale is not covered under warranty. Refer to section7.3 for detailed instructions on descaling the heat exchanger

Fin Coils
- Inspect heat exchanger fin coils for soot build-up or blockage. If there is evidence of soot build-up or blockage, the heat exchanger should be removed by a professional and cleaned thoroughly

7.2 Winterizing for seasonal use

The water heater must not be installed in a location where it may be exposed to freezing temperatures. If the heater must be left in a space which is likely to experience freezing temperatures, all water must be drained from the heater. If precautions are not taken, resulting damage will not be covered under the warranty. NOTE: Use of agents such as anti-freeze is not permitted and voids the warranty, as they may cause damage to the water heater's internal components.

1. Press ON/OFF switch on the water heater to turn OFF the heater and unplug power supply cord. The display should be blank.
2. Shut off gas supply to heater.
3. Shut off the water supply to the water heater using installer supplied shutoff valve.
4. Open hot water taps to drain and relieve pressure from the plumbing system. If water continues to flow after 5 minutes, a crossover of the hot and cold water pipes is present and must be corrected before proceeding.
5. Disconnect inlet and outlet water pipes from the water heater. Place a small bucket underneath the water heater to catch residual water remaining inside the water heater.
6. Using an air compressor, blow short bursts of air (100psi max) through the inlet water connection until there is no water present coming through the outlet water connection of the heater.
7. Reconnect water fittings and return heater to service when danger of freezing has passed.
8. Empty condensate trap (if applicable).

7.3 Mineral scale build-up

Periodic descaling may be necessary in areas with high mineral content in the water. Scale buildup in the heat exchanger may result in lower flow rates, error codes of A7 and E9 and boiling sounds in the heat exchanger.
A water softener is required if the water hardness exceeds 6 grains/gal (103 mg/l) calcium carbonate. Damage to the water heater resulting from hard water/scale deposits will not be covered under warranty.

Descaling using a pump
- ▶ Disconnect electrical supply from the water heater.
- ▶ Shut off the water supply to the water heater using (installer supplied) shutoff valve.
- ▶ Open hot water taps to drain and relieve pressure from the plumbing system.
- ▶ Drain water from the unit's heat exchanger by disconnecting inlet and outlet water connections from the heater.
- ▶ Connect a line (A) from the outlet of the circulating pump (installer supplied) to the inlet water fitting on the water heater (see fig. 61.)
- ▶ Using another line (B), connect the water outlet fitting on the water heater. Route the other end of this line into a descaling reservoir.

- Using a 3rd line (C) from the descaling reservoir, connect to the inlet side of circulating pump. Install a filter on the end of the line in the descaling reservoir.
- Make sure all connections are "water tight.".
- Fill tank with descaling solution so both lines inside are submersed. We recommend a straight white vinegar solution. If using a commercial descalant, refer to manufacturer's instructions for proper dilution ratio.
- Operate the circulating pump.
- Make sure there are no leaks and the solution is flowing from the descaling reservoir through the heater and returning to the reservoir.
- Run solution through the heater until the solution returning to the descaling reservoir comes out clear. (Changing to a fresh solution may be necessary during this process).
- Disconnect all lines and drain all solution from heat exchanger. Properly discard of solution.
- Position a container below the hot water outlet and connect cold water supply. Open cold water supply shutoff valve and flush heat exchanger with clean water.
- Shut cold water shutoff valve and reconnect hot water supply to the water heater.
- Reconnect electrical supply to unit, open water shutoff valves, and return the unit to service.

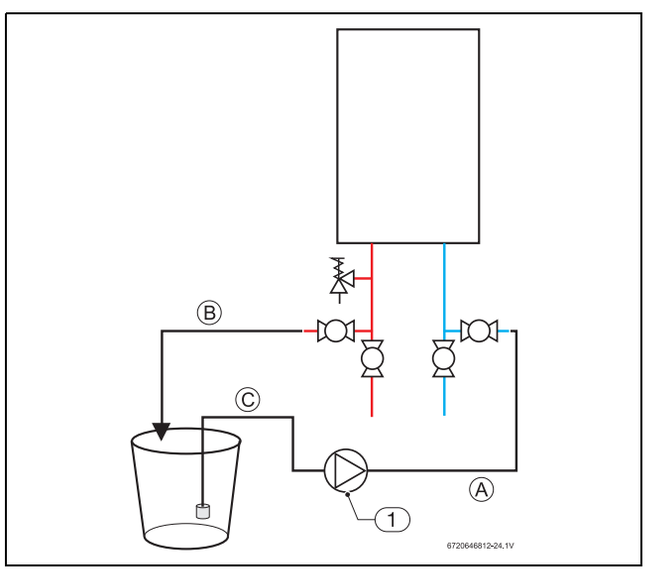

Fig. 61

[1] Pump

7.4 Adjusting CO2

The CO2 can only be adjusted by a certified gas technician with a calibrated CO2 analyzer.

CO_2 adjustment is required in Natural Gas installations where energy content is less than 900 BTU/cuft, and in installations with repeated unresolved EA and EC errors (ref. to page 44 “Problem solving”).

CAUTION:

- One factor that may affect CO_2 levels is improper gas pressure. Please see Chapter4.14 for the procedure to measure gas pressure and record your findings below:

Static Gas Pressure: [ ] “ WC

P1 Operating Pressure: [ ] “ WC

The P1 minimum operating gas pressure is 3.5" WC for Natural Gas and 8" WC for Propane. Do not proceed in adjusting CO_2 until pressure is at or above these levels, but not to exceed 10.5" WC for Natural Gas and 13" WC for Propane.

A. Once Gas Pressure is adequate

- Press ON/OFF button to turn OFF the heater.
- Remove brass flat head screw on the exhaust collar as seen in Fig.62.
- Insert CO_2 analyzer probe into the measuring port. The tip of the probe should be in the center of the flue pipe (approx 1.5" inserted). Avoid air gaps between probe and measuring port as they can alter readings.

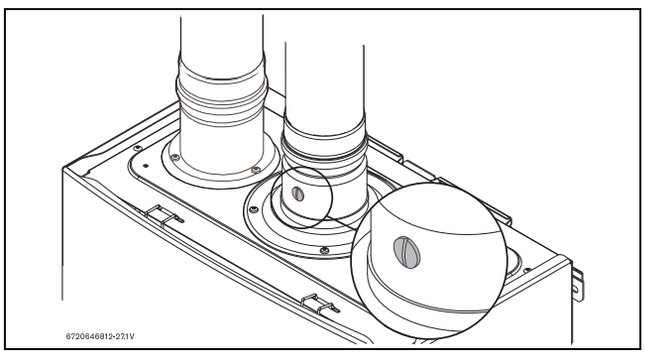

Fig. 62 Measuring port

- Press the ON/OFF button to turn ON the heater.
- Immediately following, press and hold simultaneously buttons + or − and P for 3 seconds, until display reads P2.

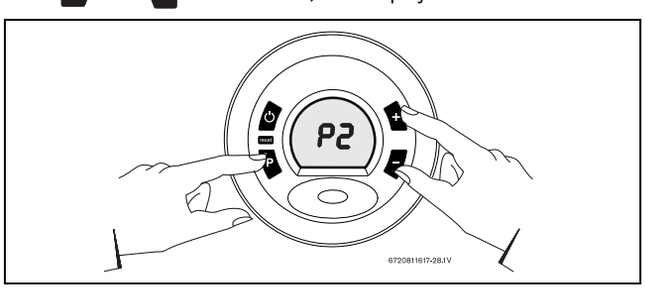

Fig. 63

- Press − button until “P1” appears on display.

B. Measuring CO_2 (Combustion cover Installed):

- Open all hot water taps to achieve a flow rate of at least 6 gpm. (1 tub and 2 sinks should be sufficient). If heater display reverts back to P2, open more hot water fixtures to allow sufficient flow. Press + until P1 reappears on the display.
- Record the CO_2 reading in P1 below. (Analyzer reading may take several minutes to stabilize).
- Press the ‘+’ button until P2 appears. Unit will ramp down to low fire and the water flow should decrease.
- Record the CO_2 reading in P2 below.

P1 CO_2 Reading: [ ] % CO_2

P2 CO_2 Reading: [ ] % CO_2

Note: When making adjustments, make sure combustion cover is installed.

		CO_2 range (%)	Max. CO level (measured)
		Nat. Gas	
max. input	P1	6.3 % - 6.9 %	< 250 ppm
min. input	P2	2.3 % - 2.6 %	< 60 ppm
		LP Gas	
max. input	P1	8.7 % - 9.3 %	< 250 ppm
min. input	P2	2.7 % - 3.0 %	< 60 ppm
*** Values above are for climate controlled conditions. Inputs such as gas pressure, heating value of the gas, humidity and temperature of combustion air all impact CO and CO_2 values. Changes in these inputs can result in different CO and CO_2 values on the same appliance.**			

Table 36 CO_2 & CO target numbers

C. Adjusting CO_2:

Note: **P1 adjustment will change the P2 reading. Confirm the P1 value BEFORE adjusting the P2 level.**

1. If P1 CO_2 level is off:

- ▶ Loosen yellow painted Phillips screw (1) and cover should rotate down (2) revealing a recessed brass slotted screw. Fig.64, page 39.
- ▶ Turning the slotted screw counter clockwise will raise P1 CO_2 levels and clockwise will lower P1 CO_2 levels. Adjustments to the slotted screw will also change P2 CO_2 levels.
- ▶ After bringing the P1 CO2 readings in proper range, press the + button to enter the P2 mode. Verify CO_2 readings in P2 mode.

2. If P2 CO_2 level is off:

- ▶ Remove yellow painted #40 Torx cover from the front of the gas valve. (Fig.65, page 39) A plastic #40 Torx screw will be revealed.
- ▶ Turning the plastic #40 Torx screw counter clockwise will lower P2 CO_2 levels and clockwise will raise P2 CO_2 levels.

Note: This screw adjustment is very sensitive and should be made in small increments. It may take several minutes for readings to stabilize.

3. Verify both P1 and P2 CO_2 readings are within the ranges specified in table36. Repeat steps 1 and 2 as necessary until CO_2 values are within the specified ranges.

Final Readings

P1 CO_2 Reading: [ ] % CO_2

P2 CO_2 Reading: [ ] % CO_2

D. Returning to Service:

1. Return slotted screw cover to original position.
2. Reinstall Torx cover.
3. Remove CO_2 analyzer probe and reinstall flathead screw with gasket in exhaust collar.
4. Press ON/OFF button to turn OFF the heater and then turn ON the heater.
5. Heater is ready for normal operation.

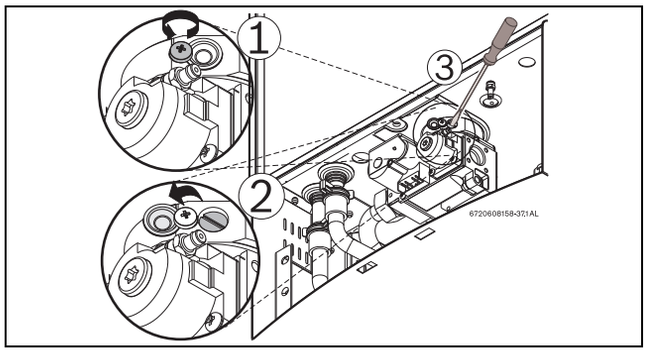

Fig. 64 Adjusting P1 CO_2 level

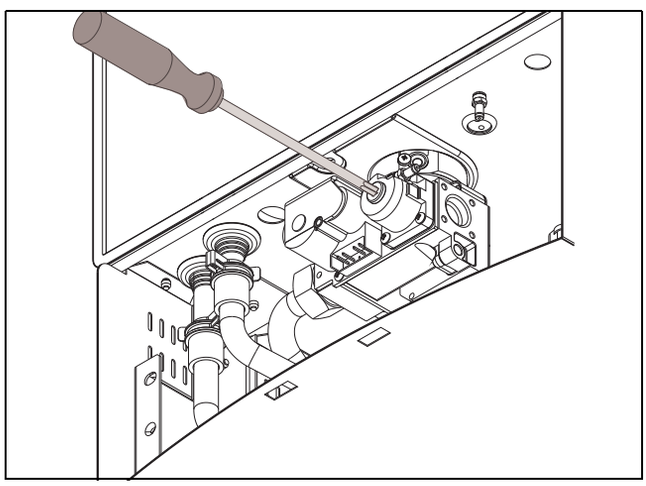

Fig. 65 Adjusting P2 CO_2 level

7.5 Program values

This section describes details on programming the appliance. For most applications the factory default values will provide robust and stable operation. Only adjust the factory settings if the installation requires changes as indicated in the appropriate section of this manual.

Refer to chapter 7.6 Control board diagnostics (page 41) regarding how to access these P-modes.

CAUTION: Appliance malfunction!

- Misadjusted program values can lead to appliance malfunction, errors, and service calls.

Program	Description	Factory Default	MIN	MAX	Comment
P1	Maximum Power	NG: 54, LP: 46	21	NG: 55, LP: 49	see chapter 4.14, page 32 note: reducing P1 values below maximum will reduce maximum power of the appliance.
P2	Minimum Power	7	7	20	see chapter 4.3.8, page 22
P3	Remote Controls installed	_0	_0	6	Not available
P4	Access to Diagnostic Mode	E	0d	10f	see chapter 7.6, page 41
P5	Cascade Mode	NO	NO	CC	contact manufacturer for details
P6	Temperature Unit	°F	°F	°C	
P7	Gas type selection	LP or NG			Preset from factory. Contact manufacturer for details.
P8	Back light	dE	dE	On	dE turns back light off after 60 seconds from last button pushed, ON turns backlight on permanently.
P9	Fan Purge				Runs secondary fan and primary fan when P9 is selected by depressing the “P” - button
PH	Cascading type	IC	IC	SC	This menu is only available when cascade mode is selected CC. Contact manufacturer for details.
PC	Primary/Secondary mode	CS	CS	Cn	

Table 37 Program values, factory default settings and ranges.

7.6 Control board diagnostics

1. Press ON/OFF button into ON.
2. Immediately following, press and hold simultaneously buttons + or − and P for 3 seconds, until display reads P2.
3. Press P to enter P2 adjustment. The current setting will appear on the display. If not, repeat process.
4. Press and release the P button on the control panel until the display reads 'P4'. You are now in the diagnostic mode of the control board.
5. When the display reads 'P4', press and release the + button once again and the display should read 'E'.
6. Use the + and − button on the control board to cycle through different diagnostic modes available.
7. Once in the selected diagnostic mode of your choice, press and release the P button to display the diagnostic information.

EXAMPLE: to read the flow rate in gallons per minute while the unit is flowing water, cycle to the '3d' mode and press the P button. A reading of 25 on the display would indicate the heater is reading a flow rate of 2.5 gallons/minute.

8. Once the information is obtained, press the P button again to return to the diagnostic mode menu and scroll to addition diagnostic information.
9. Press ON/OFF button to turn OFF the appliance and back ON again to return heater to normal function.

Diagnostic menu	
E	Entry/Exit into sub-modes
0d	Heat exchanger water temperature
1d	Inlet water temperature (°F)
2d	Outlet water temperature (°F)
3d	Water flow (gallons/min)
4d	Bypass control monitor (°F) [0d - 2d]
5d	Fan speed (Hz)
6d	Burner power (%)
7d	Maximum power (kW)
8d	Back flow temperature (°C)
9d	Exhaust temperature (°C)
1F	Most recent error/failure
2F	2nd most recent error
3F	3rd most recent error
4F	4th most recent error
5F	5th most recent error
6F	6th most recent error
7F	7th most recent error
8F	8th most recent error
9F	9th most recent error
10F	10th most recent error
1P*	Appliance type - Cd (Condensing) Appliance type - nC (Non condensing)
2P*	Appliance power - 175 / 199 (kBTU/hr)

*Table 38 * Settings define from factory*

Diagnostic menu	
3P*	Temperature range - H (100-140°F) Temperature range - C (100-184°F)
H0	Numbers of hours - mode 0
H1	Numbers of hours - mode 1
H2	Numbers of hours - mode 2

*Table 38 * Settings define from factory*

7.6.1 Working hours

To see how many hours the appliance has worked, please enter the “Diagnostic menu” (chapter 7.6);

- ▶ Select the sub-mode “H0”.
  Write the number that shows in the display.
- ▶ Select the sub-mode “H1”.
  Write the number that shows in the display.
- ▶ Select the sub-mode “H2”.
  Write the number that shows in the display.

After checking the sub-modes H0, H1 and H2, introduce the values in the table below;

Working hours		
Number in H0	_____	_____ +
Number in H1	_____ (X 100) =	_____ +
Number in H2	_____ (X 10 000) =	_____
(H0 + H1 + H2) = Total of hours		_____

Table 39

Example:
Calculation of number of working hours,

Working hours		
Number in H0	60	60 +
Number in H1	5 (X 100) =	500 +
Number in H2	0 (X 10 000) =	0
(H0 + H1 + H2) = Total of hours		560

Table 40

8 Troubleshooting

CAUTION:
- If you are unable to perform the tasks listed below, or need additional assistance please contact your original installer or a licensed gas technician.

8.1 Introduction

Many of the questions customers ask regarding operation of this unit can be answered by following the troubleshooting steps as outlined below. For best results, perform each step before proceeding to the next. The suggested solutions may require that the cover be taken off. (See fig. 3, page 8).

8.2 Burner does not ignite when hot water is turned ON

It is recommended to use “Control board diagnostics” page 41, chapter 7.6 as a tool for problem solving. If the display is showing a blinking two digit code, refer to this section.

1. If the display is blank, verify power to outlet. (120VAC/60Hz properly grounded circuit required). Verify that the heater power button is pressed ON.
2. Verify the fuses in the control board are good. To access fuses, the control board must be removed. See chapter 5.2, page 33.
3. Make sure cold water inlet connection is plumbed to the right side of heater when facing unit. See Fig.34, page 29.
4. A minimum of 0.5 gallons per minute (1.9 l/m) of hot water demand is required to activate the heater. Confirm at least 0.5 gpm flow by timing how long it takes to fill a container. A quart container should fill in 23 seconds or less, from hot water tap only, to activate heater. In unusual circumstances with high inlet water temperatures and low set temperatures, the heater may increase the activation rate above 0.5 gpm to avoid overheating at low flows. Gradually increase water flow (hot water demand) through the heater to determine if the heater activates with higher flow.
5. Clean inlet filter screen per chapter 7.1, page 37.
6. Inspect the water path for obstructions. Make sure all shower heads, faucet aerators and whole house filters are clear of debris.
7. Check for plumbing crossover. A crossover in the hot and cold plumbing pipes creates back pressure on the water flowing through the heater. Therefore, a higher flow rate than normal is needed to force the heater to activate. To check for a plumbing crossover, shut off the cold water supply to the water heater. Then open all of the hot water taps served by the heater. Wait 10 minutes and check for water flow at each tap. There should be no water flowing. Any continuous flow of water, small or large, indicates a crossover is present and must be corrected. Consult a professional plumber for help in correcting a crossover. Failing single lever faucet mixing valves are common causes of plumbing crossovers.
8. With the power button pressed switch turned to OFF and the power supply cord unplugged, remove the unit's front cover (See fig. 3, page 8). Check wire connections between the water valve, control unit and electrode set.
9. Water heater in solar mode. If inlet water temperatures exceed the water heater's set temperature, the burners will not ignite and the solar mode indicator will show on the display. See fig. 51, page 35.

8.3 Water is too hot

1. Selected temperature on the unit is too high. To lower output temperature, see chapter 6.4, page 35.
2. Clean inlet filter screen per chapter 7.1, page 37 to increase flow through the heater.
3. Inspect the water path for obstructions. Make sure all shower heads, faucet aerators and whole house filters are clear of debris.
4. Confirm the heater's gas type coincides with the type of gas being supplied. See fig. 2, page 8 for location of rating plate.
5. Avoid restrictive outlets. Clean all shower heads and faucet aerators. It may be necessary to upgrade to higher flow rate shower heads if allowable by local code.
6. In areas where the water has a high mineral content, periodic descaling may necessary. See chapter7.3, page 37 for directions.

8.4 Water is not hot enough

1. Selected temperature on the unit is too low. To raise output temperature, see chapter6.4, page 35.
2. Clean inlet filter screen. See chapter7.1, page 37 to increase flow through the heater.
3. Inspect the water path for obstructions. Make sure all showerheads, faucet aerators and whole house filters are clear of debris.
4. Confirm the heater's gas type coincides with the type of gas being supplied. See fig. 2, page 8 for location of rating plate.
5. Check inlet gas particle screen for blockage at gas inlet connection on bottom of unit.
6. Verify gas pressure is in accordance with specifications in chapter4.14, page 32. A gas pressure reading is needed to proceed further. Contact your original installer or a local certified gas technician to obtain this reading.
7. Cold water is mixing into the hot water lines (plumbing crossover). A plumbing crossover can unintentionally mix cold water with the hot water leaving the heater. The end result is a cooler water temperature than desired. To check for a plumbing crossover, shut off the cold water supply to the water heater. Then open all of the hot water taps served by the heater. Wait 10 minutes and check all taps for water flow. There should be no water flowing. Any continuous flow of water, small or large, indicates a crossover and must be corrected. Consult a professional plumber for help in correcting a crossover. Failing single lever faucet mixing valves are common causes of plumbing crossovers.

8.5 Low water flow/pressure

1. Too many hot water applications are being used simultaneously or too much flow is demanded. The water heater will effectively support two 2.0-2.5 GPM shower heads simultaneously or multiple sink applications. Greater draws will result in a water pressure drop and reduced flow at taps.
2. Ensure that gas pressure is in accordance with specifications in chapter4.14, page 32. A gas pressure reading is needed to proceed further. Contact your original installer or a local certified gas technician to obtain this reading. If gas pressure is inadequate, the water heater will close its motorized water valve, reducing the hot water flow rate in an attempt to reach the selected output temperature.
3. If selected temperature on the unit is set too high for the demanded flow rate, the water heater will close its motorized water valve, reducing the hot water flow rate in an attempt to reach the selected output temperature. Lowering the selected temperature will allow the motorized water valve to open up for increased water flow rate.
4. Clean inlet filter screen per chapter7.1, page 37.
5. Inspect the water path for obstructions. Make sure all shower heads, faucet aerators and whole house filters are clear of debris.

8.6 Hot water temperature fluctuates at tap

1. Hot water is very hot out of the water heater, requiring mixing in cold water in order to attain a usable hot water temperature. The addition of too much cold will overpower hot water flow from the tankless water heater.
   If this slows the flow through the tankless water heater below its activation point, it will shut off the burners. The end result is nothing but cold water coming out of the outlet.
2. Unbalanced pressure in water lines. Any restriction in the water heater, such as a clogged inlet filter screen, can result in unequal pressures between the cold and hot water lines. In such cases, when mixing in the higher pressure cold water at the tap, the lower pressure hot water can be overpowered. This will shut down the burners because the hot water flow rate fell below the minimum flow rate required for activation. Verify inlet filter screen is clean and clear of debris. See chapter7.1, page 37 for inlet filter cleaning instructions.
3. Heater deactivated by temperature balancing valves. If the outlet water temperature is set too high, the heater can produce temperatures that are too hot. A temperature balance shower valve will automatically mix in cold water to reduce the hot water temperature. In the event of any temperature instability at a fixture using a temperature balancing valve, refer to the valve manufacturer for instructions on internal adjustment setting. An adjustment should be made to minimize the amount of cold water the valve is adding. Additionally, the temperature setting on the heater can be lowered to prevent the temperature balance valve from mixing in too much cold.
4. Inlet water pressure is erratic due to fluctuating supply water pressure. For installation on a private well system with the use of a pressure tank, the lowest pressure range setting recommended is 40 - 60 psi (2.75 - 4.15 bar). Consult your installer or local plumber for effective ways to maintain constant water pressure to the appliance when on a well system.

8.7 Noisy burner/heater during operation

1. Sealed combustion leak. Make sure combustion cover is securely fastened. Ensure the exhaust vent adaptor is properly sealed with supplied gasket. Leaky seals create improper combustion resulting in noise.
2. Improper venting. Venting that is unsealed, the wrong material, too big in diameter or too long in run will result in unstable burner flames and noise. Ensure venting is in accordance with specifications in chapter4.3, page 11.
3. Lack of adequate combustion air. Drawing combustion air from a room area of inadequate size will result in unstable burner flames and noise. Improper piping of combustion air to the outside or insufficient space will result in unstable burner flames and noise. Ensure adequate combustion air is provided from the unit in accordance with specifications in Section4.4, page 24 Combustion Air Requirements.
4. Cross contamination. Ensure that intake and exhaust terminations maintain required clearances as stated in chapter 4.3, page 11. Cross contamination between intake and exhaust may cause unstable burner flames and noise.
5. Lack of gas pressure. Inadequate gas pressure will cause the fuel-to-air mixture (CO_2) to be out of adjustment. This will result in unstable burner flames and noise. Ensure gas pressure is in accordance with specifications in Section4.14, page 32 Measuring Gas Pressure. A gas pressure reading is needed to proceed further. Contact your original installer or a local certified gas technician to obtain this reading.
6. Verify proper CO_2 readings per chapter7.4, page 38. CO_2 adjustments must be done by a certified gas technician with a calibrated combustion gas analyzer.

9 Problem solving

9.1 Error code diagnostics

To remove error code from the display, press the reset button.

Display	Cause	Solution
A2	Fault in the flue gas limiter. Temperature above 230°F (110°C) inside the cabinet.	1. Check continuity of the flue gas limiter (see fig. 70, page 50). Go to steps two and three to determine flue gas limiter fault and repair it. 2. Check for flue gas leakage around the top and bottom seals of heat exchanger, use mirror to check around the rear as well as the viewing window. 3. Unplug heater and check that flue gas limiter connector and spade connections are secure. 4. Check the wiring harness connections on the control board.
A3	Wire harness defect.	1. Check wire harness. 2. Measure resistence loose on wire harness nearby the overmolding, must be 115 - 120 ohm. 3. Check diagnostic menu > 1P, “nC” must be showed on the display.
A4	Backflow temperature sensor defect - happens if sensor is disconnected or short circuit.	1. Check backflow temperature sensor connection. See fig. 70, #14, page 50. 2. Replace exhaust temperature sensor. 3. Check sensor (ref. page 48, chapter 11).
A7	Outlet temperature sensor fault (Temperature below 36°F or above 210°F).	1. Sensor may trip if water temperature drops below 36°F to protect heater from freezing conditions. Any damage due to freezing conditions is not covered under warranty. 2. In areas where water has a high mineral content, periodic descaling may necessary. 3. Check wire connections at outlet temperature sensor. 4. Check sensor (ref. page 48, chapter 11).
(Flashing) A9	Outlet temperature sensor not sensing expected output temperature. (Status message, not an error).	1. Check gas pressure, see chapter 4.14, page 32. Low gas pressure may prevent the heater from reaching desired output temperature. 2. Check supply voltage. It must be 120VAC and properly grounded. 3. Check wire connections at outlet temperature sensor. 4. Possible defective control unit call manufacturer for further instructions.
C6	Primary fan rotation too low in operation.	1. Disconnect power supply cord and check wire connection on back side of fan and the connectors on the control board. 2. Check supply voltage. It must be 120VAC and properly grounded. 3. Check venting specifications are met, see chapter 4.3, page 11. Long vent lengths, venting with more than three elbows, blocked vent or combination venting may cause this failure. 4. Ensure intake and exhaust terminations maintain the required clearances stated in the manual. Cross contamination between intake and exhaust may cause the fan to alter its rotational speed. 5. Check gas pressure. Low gas pressure may cause the fan to change its speed to meet desired temperature. 6. Possible defective control unit call manufacturer for further instructions.

Table 41

** By installer or service technician only.*

Display	Cause	Solution
C7	No rotational speed sensor signal from primary fan.	1. Disconnect power supply cord and check wire connections on back side of fan and the two connectors on the control board. 2. Check supply voltage. It must be 120VAC and properly grounded. 3. Possible defective component in fan or defective control unit call manufacturer for further instructions.
(Flashing) CA	Water flow signal over specified maximum value. Water flow > 10 gallon/min. (Status message).	1. Disconnect power supply cord and check wire connections on water valve and the two connectors on the control board. 2. Excessive water pressure and flow. Ensure water pressure is less than 150psi and flow rate is below 10 gallons per minute.
E1	Over-temperature detected by outlet temperature sensor. Temperature > 185°F	1. In areas where water has a high mineral content, periodic descaling may be necessary. See chapter7.3, page 37 for directions. 2. Check wire connections at outlet temperature sensor. 3. Check sensor (ref. page 47, chapter 10).
E2	Inlet temperature sensor fault.	1. Check wire connections at inlet temperature sensor. 2. Sensor may trip if water temperature drops below 36°F (2°C). Protect heater from freezing conditions as any damage due to freezing conditions is not covered under warranty. 3. Check sensor (ref. page 48, chapter 11).
E4	Backflow temperature sensor over 309°F. The appliance will close the burner and lock (non-volatile).	1. Check inlet/outlet vent pipes. 2. Check if secondary fan connections are disconnected. 3. Check if venting specifications are met. Long vent lengths, venting with more than three elbows, blocked vent or combination venting may cause this failure. See chapter 4.3, page 11. 4. Call manufacturer for further instructions.
E9	Overheat sensor (ECO) open circuit (resets when cooler temperatures are detected 220°F/104 °C).	1. Disconnect power supply cord and check wire connections on the overheat sensor (fig. 70, #11, page 50) and the two connectors on the control board. 2. Check white wire connections at the overheat sensor. Clean terminals with an eraser. If badly corroded, replace sensor and wire harness. 3. Check that venting specifications are met, see chapter 4.3, page 11. Long vent lengths, venting with more than three elbows, blocked vent or combination venting may cause this failure. 4. In areas where water has a high mineral content, periodic descaling may necessary, see chapter 7.3, page 37. 5. Unplug power supply cord to the water heater. Open a hot water tap for several minutes to allow cold water to pass through heat exchanger. Close hot water tap and disconnect lead wires to overheat sensor. Using a multimeter, check continuity through overheat sensor contacts. Replace sensor if open.

Table 41

** By installer or service technician only.*

Display	Cause	Solution
EA	No flame ionization detected with water flow.	1. Verify that all manual gas shut off valves are open. 2. Check gas type. See fig. 2, page 8. 3. Reset error code and open a water tap to cycle the heater in an effort to purge air. Cycling hot water tap on and off multiple times may be necessary. If heater still faults with EA error code, have a licensed gas technician properly purge air out of the gas line leading to the water heater. 4. Check three wire connections to ignition group on the lower front of the heat exchanger are secure. 5. Check gas pressure. See chapter 4.14, page 32. 6. Check venting specifications are met. Improper venting may cause premature failure of the flame sensor rod. See chapter 4.3, page 11. 7. Check that the minimum power fan speed has been adjusted to the proper value. See page 22. 8. Observe inside the viewing window of the heat exchanger when a hot water tap is opened. Sparking should be followed by a steady blue flame. If flame is unstable/ yellow with proper gas pressure, confirm CO2 readings per chapter 7.4, page 38.
EC	Ionization failure during operation.	1. Check gas type, fig. 2, page 8. 2. Check three wire connections to ignition group on the lower front of the heat exchanger are secure. 3. Verify that venting specifications are met. Improper venting may cause premature failure of the flame sensor rod. See chapter 4.3, page 11. 4. Check gas pressure. See chapter 4.14, page 32. 5. Check and adjust CO2 readings. See chapter 7.4, page 38. 6. Check that the minimum power fan speed has been adjusted to the proper value. See page 22.
E0	Internal hardware/software failure.	1. Disconnect power supply cord and check the two wire and ground connections on control board as well as ground connection on heater chassis. 2. Pressing the wrong combination of buttons on the control unit can create confusion among the microprocessors inside. In this case, the error code should not happen more than once or twice. Turn off the water heater. Turn water heater back on and try resetting error code. Use the reset button (⚠) to reset any error codes. 3. Possible defective control unit call manufacturer for further instructions.
F7	Ionization error at standby.	1. Loose connection to the flame ionization rod. Verify that the thinner wire leading from the control unit is securely connected to the set of electrodes located on the lower front of the heat exchanger. 2. Flame ionization rod or control unit may be damaged. Contact manufacturer for further instruction.
FA	Gas leakage error, gas valve circuit not closing properly.	1. Disconnect power supply cord and check wire connections on gas valve and the two connectors on the control board. 2. Flow water out of a hot water tap above the minimum activation point of 0.5 GPM. Measure voltage at the gas valve wire plug connection. The voltage should measure 24VDC between the left pair of wires and 24VDC between the right pair of wires when the unit is operating. If voltage is not proper, contact manufacturer for further instruction. 3. Gas valve may be defective, contact manufacturer for further instruction.

Table 41

** By installer or service technician only.*

10 Electrical diagram

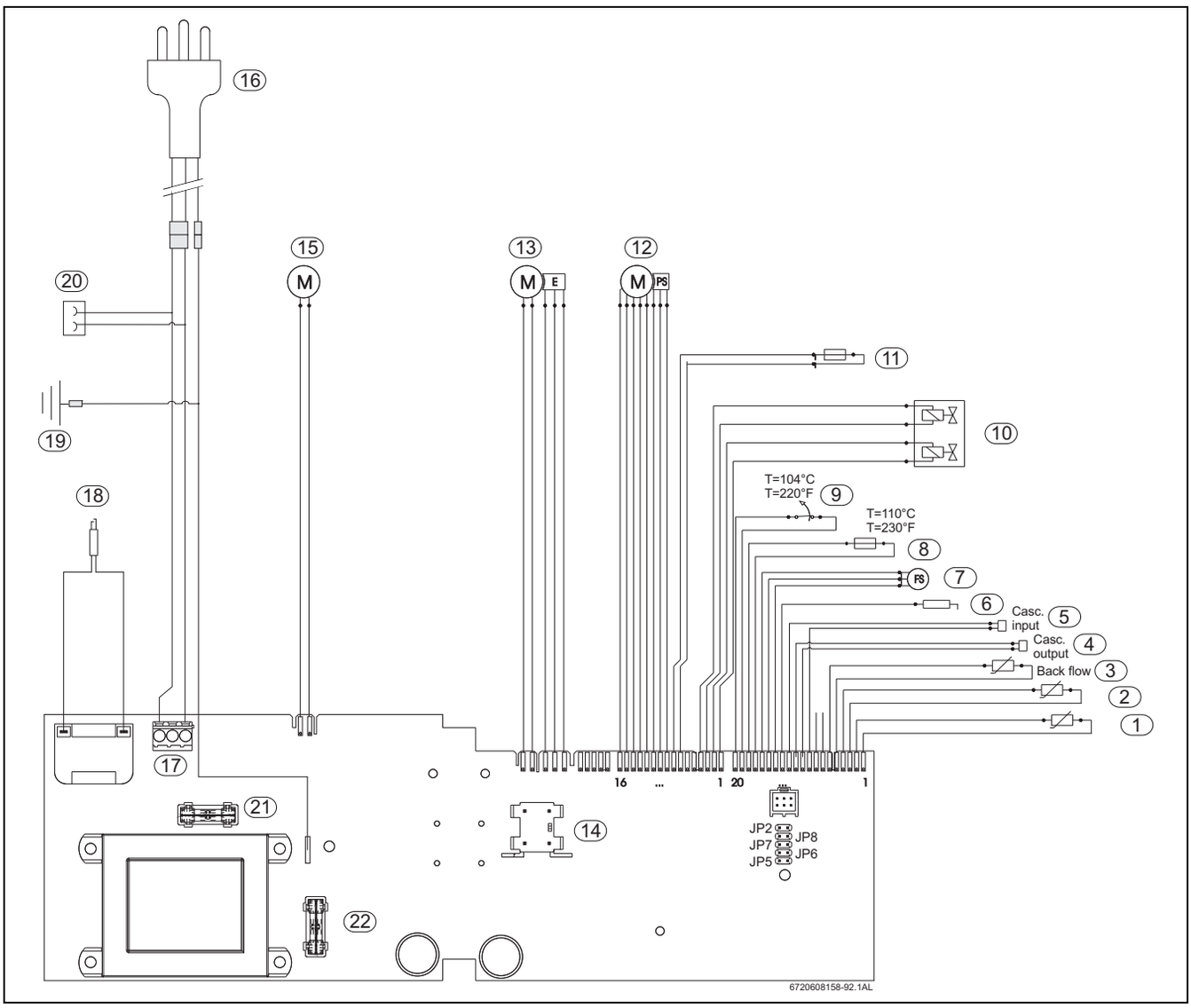

Fig. 66 Electrical scheme

[1] Intlet water temperature sensor
[2] Outlet water temperature sensor
[3] Backflow temperature sensor
[4] Cascading output connection
[5] Cascading input connection
[6] Ionization sensor
[7] Water flow sensor
[8] Flue gas limiter
[9] Heat exchanger overheat sensor (ECO)
[10] Gas valve
[11] Jumper resistance
[12] Water valve
[13] Primary fan
[14] ON/OFF switch
[15] Secondary fan
[16] AC plug
[17] Main connection
[18] Ignition electrodes
[19] Ground post
[20] Antifreeze kit connection
[21] Fuse
[22] Fuse

11 Sensor resistance charts

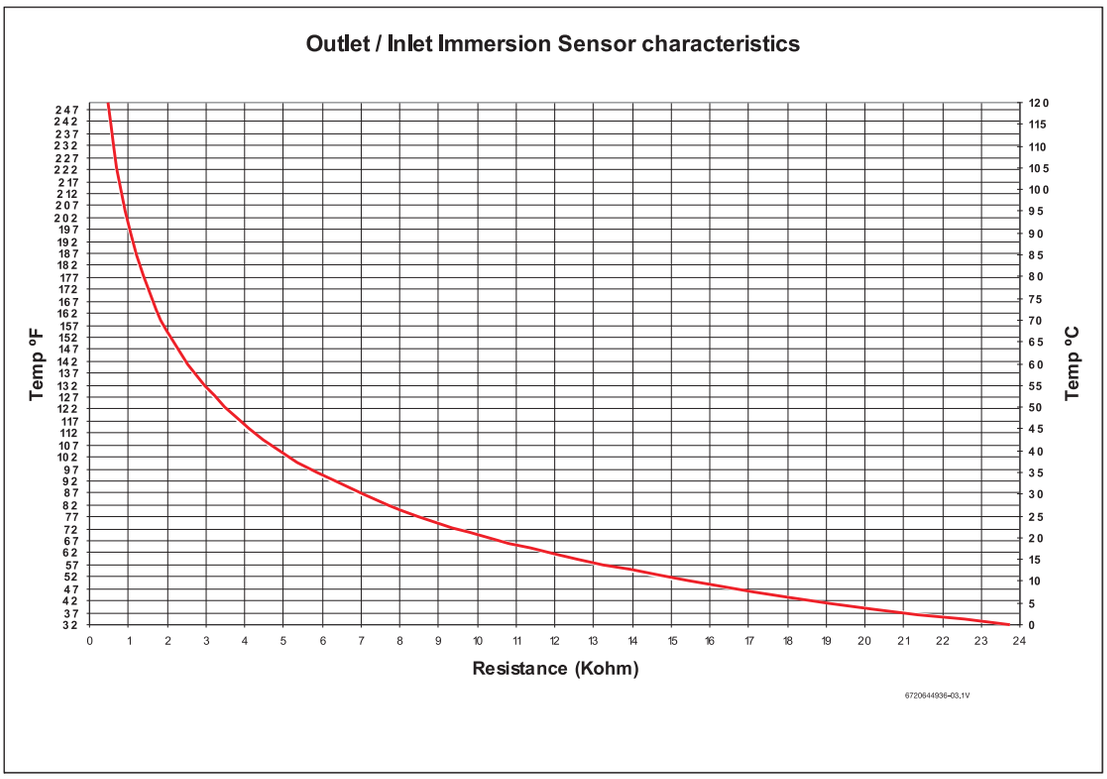

Fig. 67 Outlet / Inlet immersion sensor characteristics

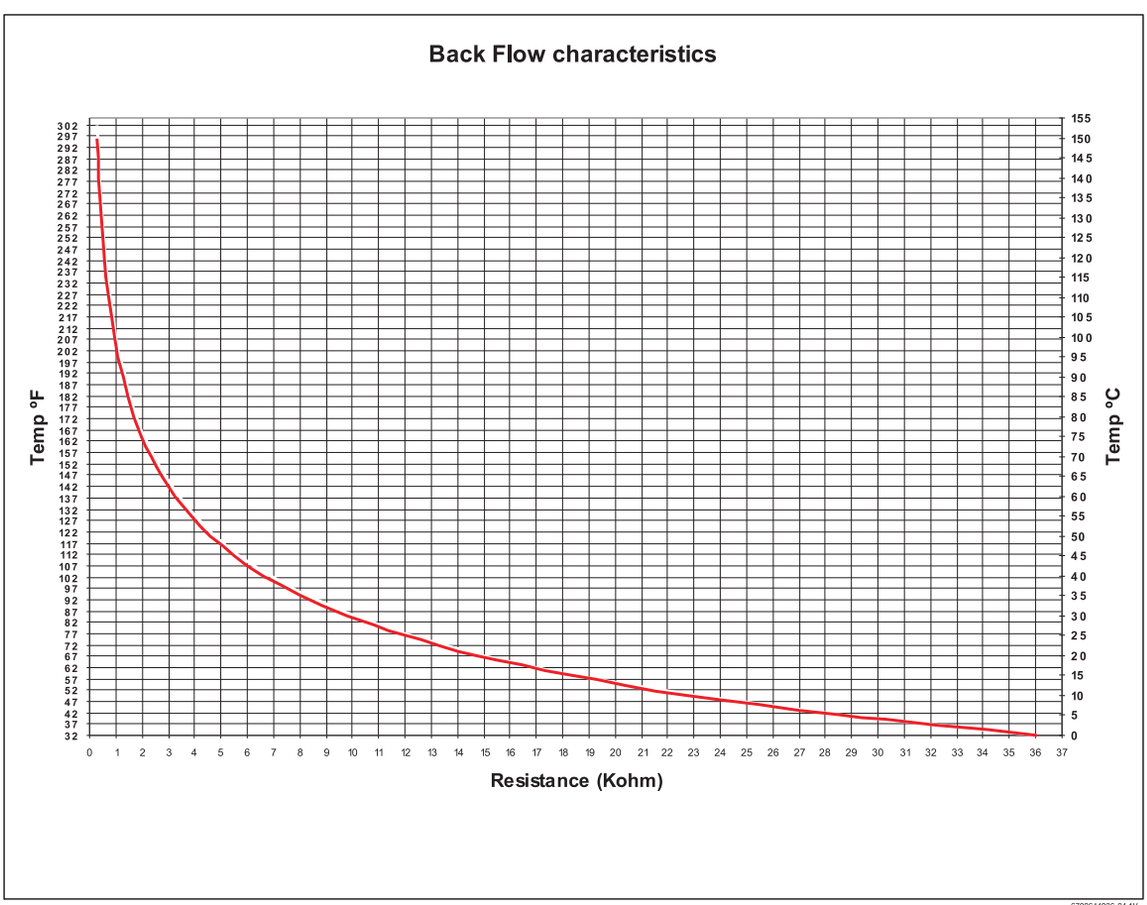

Fig. 68

12 Functional scheme

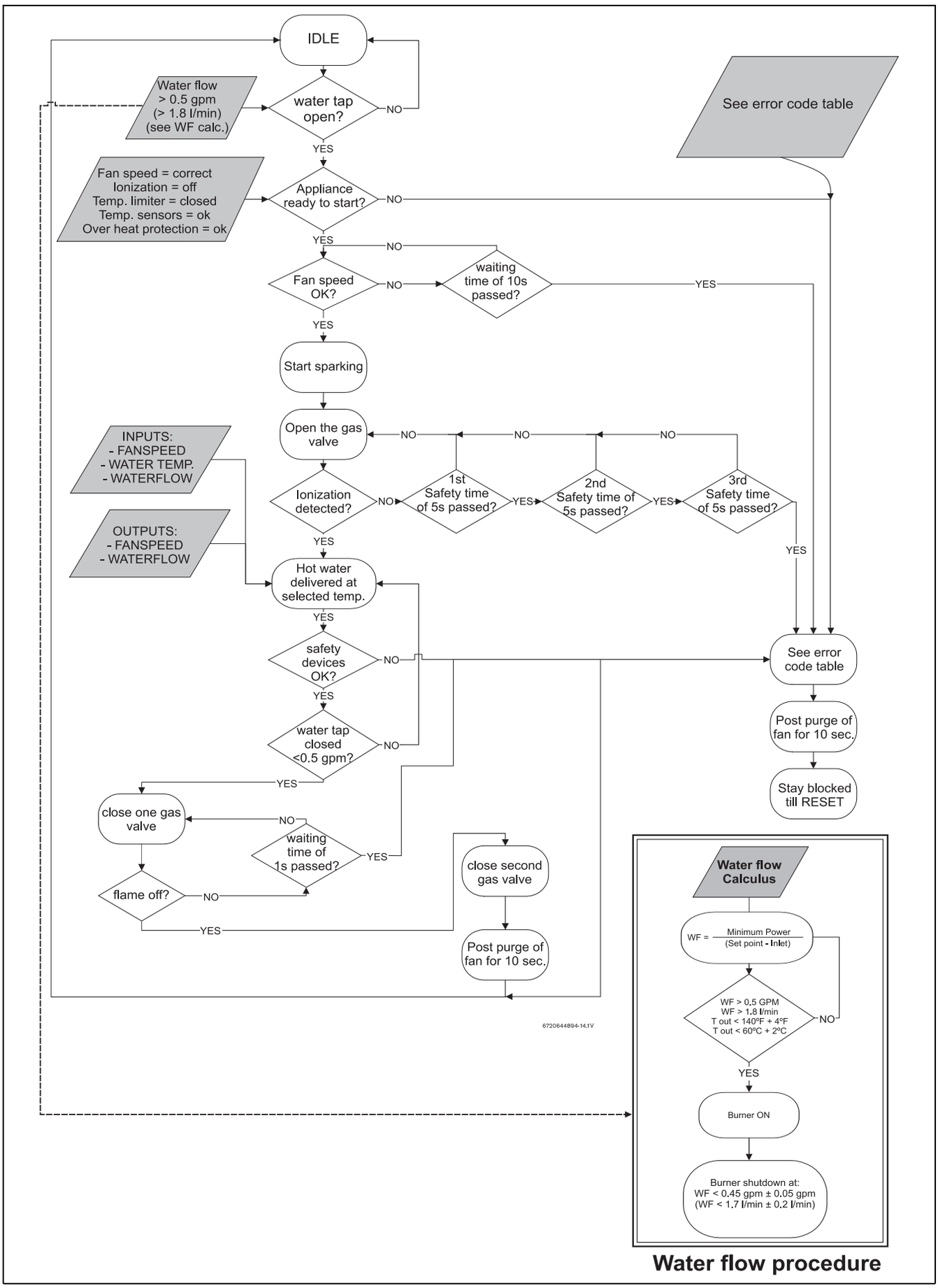

Fig. 69 Functional scheme

13 Interior components diagram

13.1 Interior components

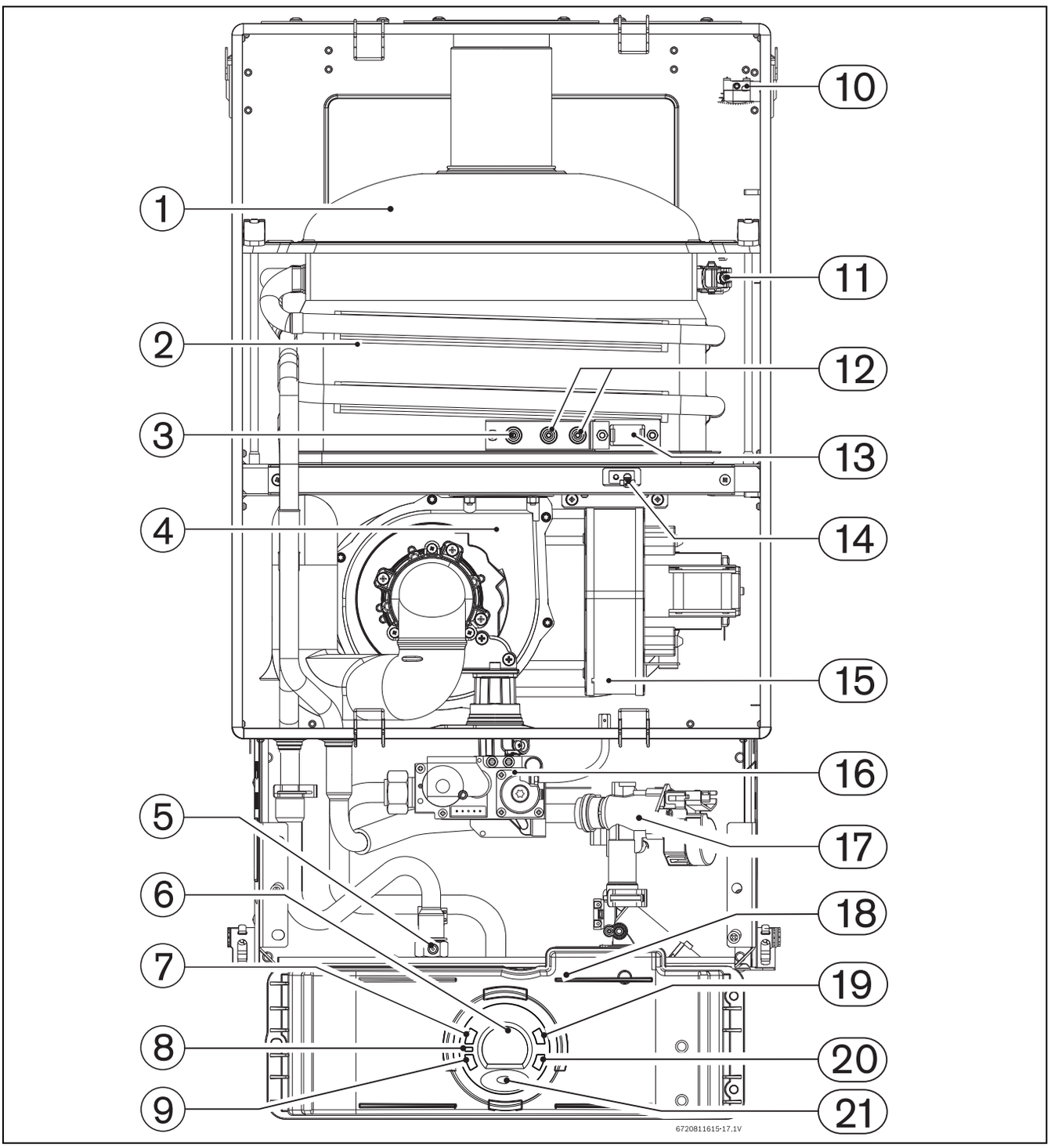

Fig. 70 Components

[1] Flue gas collector
[2] Heat exchanger
[3] Flame sensor
[4] Primary fan (Mixer)
[5] Outlet temperature sensor
[6] LCD display
[7] On/Off button
[8] Reset button
[9] Program key
[10] Flue gas limiter
[11] Heat exchanger overheat sensor
[12] Ignition electrodes
[13] Observation window
[14] Backflow temperature sensor
[15] Secondary air fan
[16] Gas valve
[17] Water valve with engine and temperature sensor
[18] Control unit
[19] Up button
[20] Down button
[21] LED

14 Protecting the environment

Packing

The packing box may be fully recycled as confirmed by the recycling symbol .

Components

Many parts in the heater can be fully recycled in the end of the product life. Contact your city authorities for information about the disposal of recyclable products.

Saving water resources:

- Make sure you close all the taps after any use. Avoid leaving the taps dripping. Repair any leaking tap.
- Define the temperature you want, in the appliance or with the remote control. This way you have the precise water flow needed (mixing cold water to regulate temperature will increase the water flow with consequent waste of water).

15 LIMITED TANKLESS HEATER WARRANTY

BRADFORD WHITE CORPORATION

LIMITED TANKLESS HEATER WARRANTY

WHAT DOES THIS LIMITED WARRANTY COVER?

This limited warranty covers both the heat exchanger and component parts for leakage or other malfunction caused by defects in materials and/or workmanship. It applies to the original consumer purchaser and to any subsequent owner as long as the heater remains installed at its original place of installation and installation is performed by a Bradford White Certified Installer.

WHAT DOES THIS LIMITED WARRANTY NOT COVER?•

1. This limited warranty does not cover leakage or other malfunction caused by:
   a) Defective installation, reinstallation at another location, installation by other than a Bradford White Certified Installer and specifically, any installation which is made:
      i) in violation of applicable state or local plumbing, housing or building codes, or
      ii) without a certified American Gas Association, ASME, or comparable pressure relief valve, or
      iii) contrary to the written instructions furnished with the unit.
   b) Adverse local conditions, and specifically sediment or lime precipitate in the heat exchanger; corrosive elements in the atmosphere; or water quality contrary to the written requirements furnished with the unit.
   c) Misuse, and specifically operations and/or maintenance contrary to the written instructions furnished with the unit, anode removal (if provided), disconnection, alteration or addition of non-approved components or apparatus, operation at settings other than those set forth on the rating plate, or accidental or other exterior damage.
2. This warranty also does not cover:
   a) Production of noise, taste, odors, discoloration or rusty water.
   b) Incidental property damage, loss of use, inconvenience or other incidental or consequential costs.
   c) Costs associated with the replacement and/or repair of the unit, including:
      i) any freight, shipping or delivery charges
      ii) any removal, installation or re-installation charges
      iii) any material, and/or permits required for installation, re-installation or repair
      iv) charges to return the defective heater and/or component part to the manufacturer.

WHAT IS THE PERIOD OF COVERAGE?

This limited warranty runs from date of installation (or without proof of installation, from three (3) months after the date of manufacture) for the period specified on the following table.

TWELVE YEAR LIMITED HEAT EXCHANGER WARRANTY*

A no charge* replacement unit will be provided in the event of a covered failure of the Heat Exchanger.

FIVE YEAR LIMITED PARTS WARRANTY*

All other parts not referenced above are covered for five years from date of original installation.

---

*Note: A warranty product or part is provided exclusive of labor, freight and/or any installation costs. Any product used for other than a single family housing unit application will be warranted for only five (5) years on heat exchanger and one (1) year on parts regardless of any other warranty period specified. Circulated water system will be warranted for three (3) years. All replacement heaters and parts carry the balance of the original warranty, i.e. if an original twelve (12) year warranted heater develops a leak due to defects in materials/workmanship after only eight (8) years, the replacement unit is warranted for four (4) years in this example.

WHAT IS THE DURATION OF THE IMPLIED WARRANTY?

ANY IMPLIED WARRANTIES, INCLUDING THE WARRANTY OF MERCHANTABILITY IMPOSED ON THE SALE OF THE WATER HEATER UNDER THE LAWS OF THE STATE OF SALE ARE LIMITED IN DURATION TO ONE YEAR FROM DATE OF ORIGINAL INSTALLATION.

HOW DOES STATE LAW RELATE TO THE WARRANTY?

Some states do not allow:

1. Limitations on how long an implied warranty lasts.
2. Limitations on incidental or consequential damages.

So the above limitations or exclusions may not apply to you.

This warranty gives you specific legal rights, and you may also have other rights which vary from state to state.

•Restrictions are not applicable to implied warranties in California. See “Special State Provisions” on reverse side.

238-50821-00A (5/14)

Fig. 71

LIMITED TANKLESS HEATER WARRANTY (CONTINUED)

WHAT WILL WE DO TO CORRECT PROBLEMS?

1. If a defect occurs within the heat exchanger warranty period, we will:
   Provide a replacement heater of our manufacture, (or at our option) repair any unit, which develops a leak in the heat exchanger within the warranty period. To obtain a replacement, you must forward both the rating plate from the defective unit to us and a copy of the original sales receipt. If government regulations require the replacement heater to have features not found in the defective heater, you will be required to pay the difference in price represented by those government required features.

2. If a defect occurs within the parts warranty period, we will:
   Provide a replacement part (or at our option repair) any part which fails to function within the parts warranty period. To obtain a replacement, you must forward the defective part to us. If government regulations require the replacement part to have features not found in the defective part, you will be required to pay the difference in price represented by those government required features.

We do reserve the right to verify any claims of defect by inspection.

WHAT WILL WE NOT DO?

We will not:

1. Repair or replace any heater, or part, subject to conditions outlined in “What Does This Limited Warranty Not Cover?”
2. Reimburse any costs associated with repair and/or replacement.
3. Replace and/or repair any heater without complete model/serial number.
4. Replace any heater without prior receipt of actual rating plate from appliance and copy of original sales receipt.

HOW DO YOU GET WARRANTY ASSISTANCE?

Upon discovering a defect or problem, you should:

1. Contact either the Bradford White Certified Installer or dealer, or
2. Contact us--
   BRADFORD WHITE CORPORATION
   WARRANTY SUPPORT GROUP
   200 LAFAYETTE STREET
   MIDDLEVILLE, MI 49333
   1-800-531-2111

CALIFORNIA RESIDENTS CALL 1-800-538-2020
Please have model number and serial number ready.

WHAT SHOULD YOU DO TO KEEP THE WARRANTY IN EFFECT?

To facilitate warranty assistance, you should:

1. Follow all instructions enclosed with the product.
2. Retain all bills of sale or receipts for proof of installation, etc.
3. Contact your installer, dealer or our Warranty Department as soon as any problem or defect is noticed.
4. When necessary, allow us, or our chosen representative, to inspect the unit.
5. For your reference, fill in the Model and Serial Number found on the units Rating Plate:

Model Number _____

Serial Number _____

Date of Installation _____

Name of Installer _____

SPECIAL STATE PROVISIONS

For heaters installed in California or Oregon, Paragraphs 2(c) (i) (iv) of the paragraph “WHAT DOES THIS WARRANTY NOT COVER?” does not apply.
All other terms and conditions of this warranty apply as stated.

PLEASE RETAIN THIS WARRANTY IN A SAFE LOCATION FOR FUTURE REFERENCE.

238-50821-00A (5/14)

Fig. 72

16 Installer Checklist to be completed by installer upon installation

Serial Number (8 digit serial number is located on rating plate on right side panel)	— — — — — — — —
Gas Pressure Reading [1]	
Static	
Operating	
Water Pressure	
Building Water Pressure	
Range if on Well system	
Installing Company	
Installer name	
Address	
Phone	

Table 42

1) See Chapter 4.14, page 32 and gas pressure table (to be filled out by installer)

Installation manual should be left with the owner after the installation is tested and completed.

Notes

6720811615

BRADFORD WHITE®
WATER HEATERS

Ambler, PA

For U.S. and Canada field service,
Contact your professional installer or
local Bradford White representative.

Sales/**800-523-2931**
*Fax/**215-641-1670***
*Parts Fax/**215-641-2180***

Technical Support/**800-334-3393**
*Fax/**269-795-1089***

Warranty/**800-531-2111**
*Fax/**269-795-1089***

International:
Telephone/**215-641-9400**
*Telefax/**215-641-9750***

BRADFORD WHITE-CANADA™ INC.
A SUBSIDIARY OF BRADFORD WHITE CORPORATION

Mississauga, ON

Sales/**866-690-0961**
905-238-0100

*Fax/**905-238-0105***
Technical Support/**800-334-3393**

Email
parts@bradfordwhite.com
techserv@bradfordwhite.com

www.bradfordwhite.com