DORN BRACHT

Bathtub - CL.1

Deck valve counter-clockwise closing hot - platinum matte

Article number: 20 004 706-06



- 1-1/4" hole diameter
- Flange 2-3/8" x 1-7/8"

Codes & Standards

- NSF/ANSI 372
- ASME A112.18.1/CSA B125.1
- NSF/ANSI/CAN 61
- ADA

- Fittings group in compliance with DIN 4109: 1
- (ADA)



platinum matte

Discontinued items available to order until 31.12.9999

Bathtub - CL.1
Deck valve counter-clockwise closing hot - platinum matte
Article number: 20 004 706-06

Dimensional drawing

mm [inches]

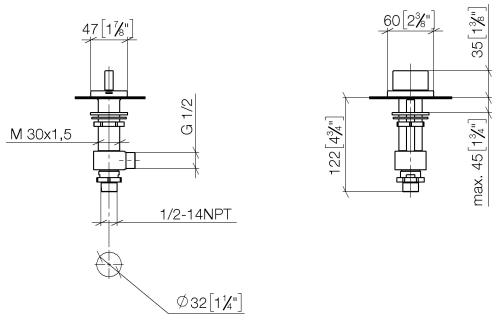

All dimensions in mm / inch = mm x 0,0394

Flow rate chart

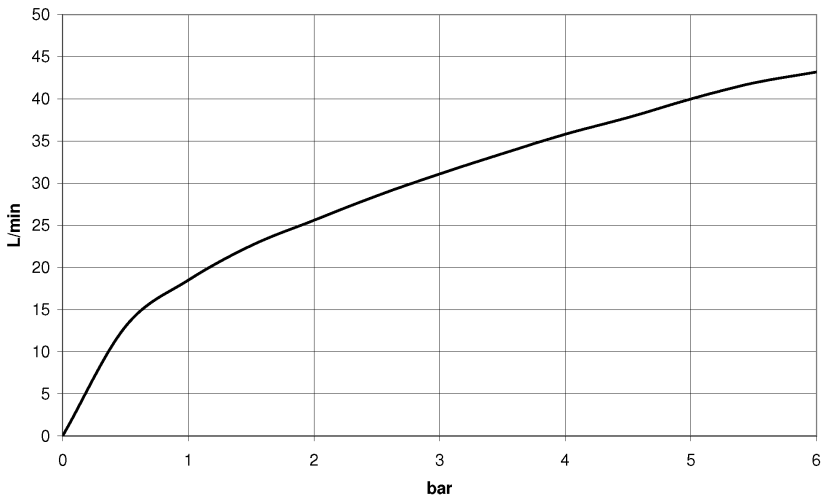

Bathtub - CL.1
Deck valve counter-clockwise closing hot - platinum matte
Article number: 20 004 706-06

Other surface finishes



polished chrome

20 004 706-00



Dark Platinum matte

20 004 706-99

More custom finish options are available via special production (xTra Service). Please see our finish matrix for availability and pricing or contact a Dornbracht representative.

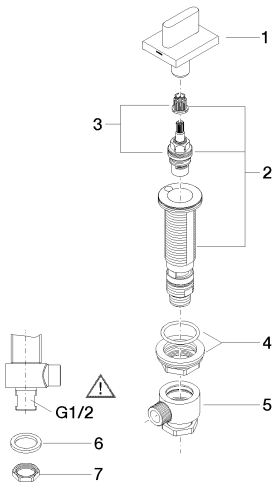

Spare parts list

Number	Item Number	Designation	Number of units
1	90 20 70 051 07-06	handle (hot)	1
2	04 17 11 058 52 90	side panel	1
3	90 90 03 152 00 90	top	1
4	04 23 10 032 78 90	fixing set	1
5	04 17 11 023 10 90	distributor	1
6	04 23 30 040 00-06	threaded connector	1
7	09 30 11 059 90	disc	1
8	09 23 10 012 90	nut	1