3155CT / 3155SSCT

COMMERCIAL EXTRA HEAVY-DUTY
PLASTIC TOILET SEAT



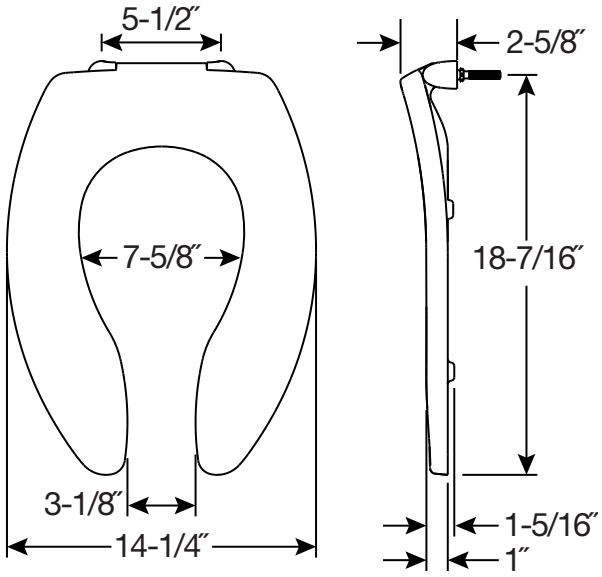

FEATURES:

- **Stay·Tite®**
  Commercial Fastening System™
  Never Loosens. Guaranteed.
- **DuraGuard® Antimicrobial ***
  Built-in seat protection™
- **Self-Sustaining Check**
  Hinges (3155SSCT)
  Keeps seat upright for standing use or cleaning

*Antimicrobial property that is built in to the toilet seat to inhibit the growth of bacteria. Does not protect users or others against bacteria, viruses, germs, or other disease organisms. Always clean and wash this product thoroughly before and after each use.

SPECIFICATIONS:

Size: Elongated

Material: Plastic

Style: Open Front less Cover

Ring Bumpers: Four

Hinges: Plastic Non Self-Sustaining Check Hinges (3155CT) or Self-Sustaining Check Hinges (3155SSCT) with Non-Corroding 300 Series Stainless Steel Posts and Pintles

Hardware: Stay·Tite® Commercial Fastening System™

Codes & Standards: Complies with IAPMO/ANSI Z124.5 Performance Standards Heavy-Duty Commercial

Bemis Manufacturing Co. reserves the right to make revisions without notice to product specifications. ©06.2025

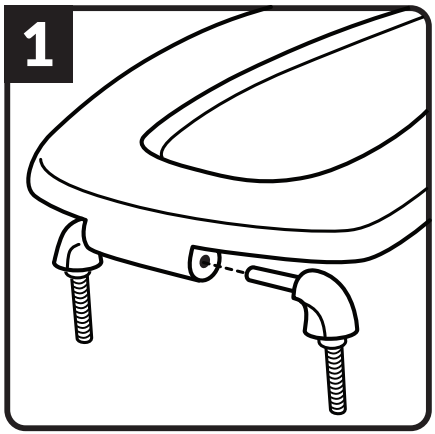

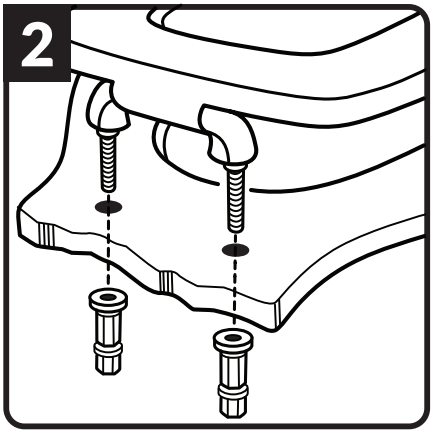

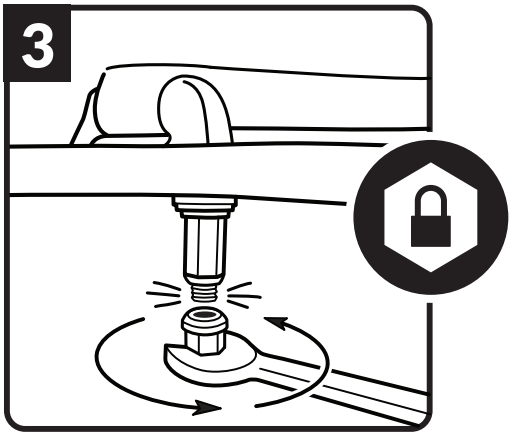

1B5153060

BEMIS

STAY·TITE®

COMMERCIAL FASTENING SYSTEM™

INSTALLATION INSTRUCTIONS

1. Insert hinges into seat.
2. Place seat on bowl and ***lightly*** finger-tighten nuts.
3. Holding seat centered on bowl, use a 5/8" wrench on the lower part of nuts and alternately tighten them until lower nuts **SNAP OFF**.

⚠ IMPORTANT!

Stay·Tite® nuts snap off at the correct torque, to prevent over- or under-tightening for a secure fit that will **NEVER LOOSEN. GUARANTEED.**

Note: To uninstall, remove nuts with 5/8" wrench.

CARE & CLEANING

Toilet seats should be cleaned using only mild, soapy water and a soft cloth or sponge. Rinse clean with water and thoroughly dry with a clean cloth.

To avoid damaging the finish, do not allow aerosol products, abrasive chemicals or cosmetics (fingernail polish, aftershave, harsh cleansers, etc.) to come in contact with the toilet seat.

Do not use bleach, pine oils, essential oils, chlorine, acid, disinfectants, products in aerosol cans, hard brushes, abrasive scouring powders or pads. Harsh chemicals can rub away or corrode paint finishes on toilet seats, metal hinges, and dull plastic seats.

If you need any further assistance, please contact Customer Service at 888.722.6488.

©2019 Bemis Manufacturing Co.

LIMITED WARRANTY

This product is guaranteed against defects in material and workmanship for one year from date of purchase. If this product is defective, the exclusive remedy will be a replacement product of equal value.

Expenses incurred during removal or installation are excluded. Plastic suitable for commercial and residential use; enameled wood for residential use only.

If you need any further assistance, please contact Customer Service at 888.722.6488.

©2019 Bemis Manufacturing Co.