1950

COMMERCIAL HEAVY-DUTY
PLASTIC TOILET SEAT



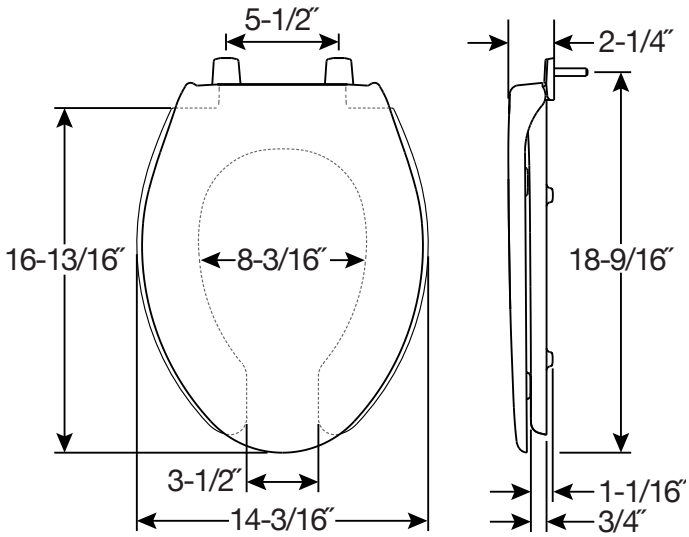

FEATURES:

- **Top·Tite® Hinges**
  Seat installs easily from above the bowl

SPECIFICATIONS:

Size: Elongated

Material: Plastic

Style: Open Front with Cover

Ring Bumpers: Four

Hinges: Plastic

Hardware: Non-Corroding Top·Tite® Bolts and Wing Nuts

Codes & Standards: Complies with IAPMO/ANSI Z124.5 Performance Standards Heavy-Duty Commercial

Bemis Manufacturing Co. reserves the right to make revisions without notice to product specifications. ©06.2025