SYMMONS® Hydapipe®

1-901 Series

INSTALLATION INSTRUCTIONS

Product meets ANSI A112.18.1M
Flow rate: 2.5 gpm (9.5 L/min)

Drilling pattern for valve and piping assembly

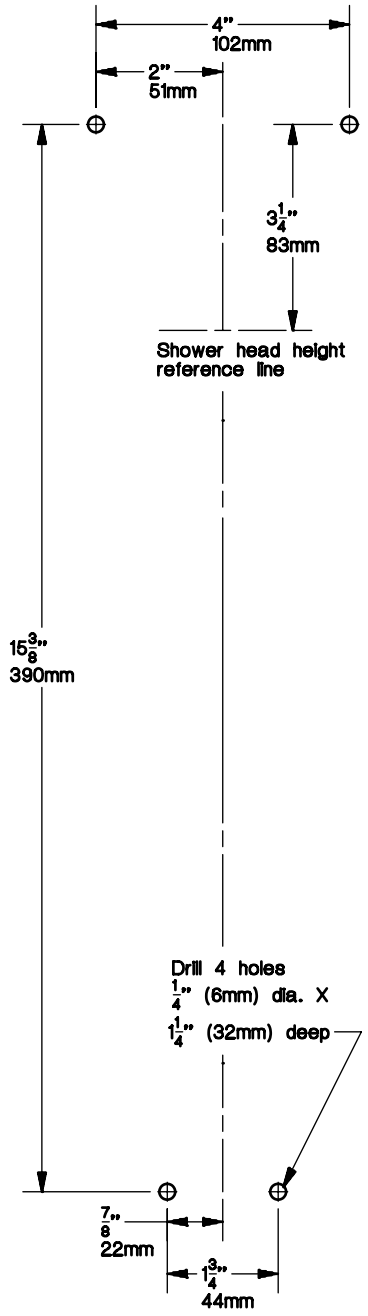

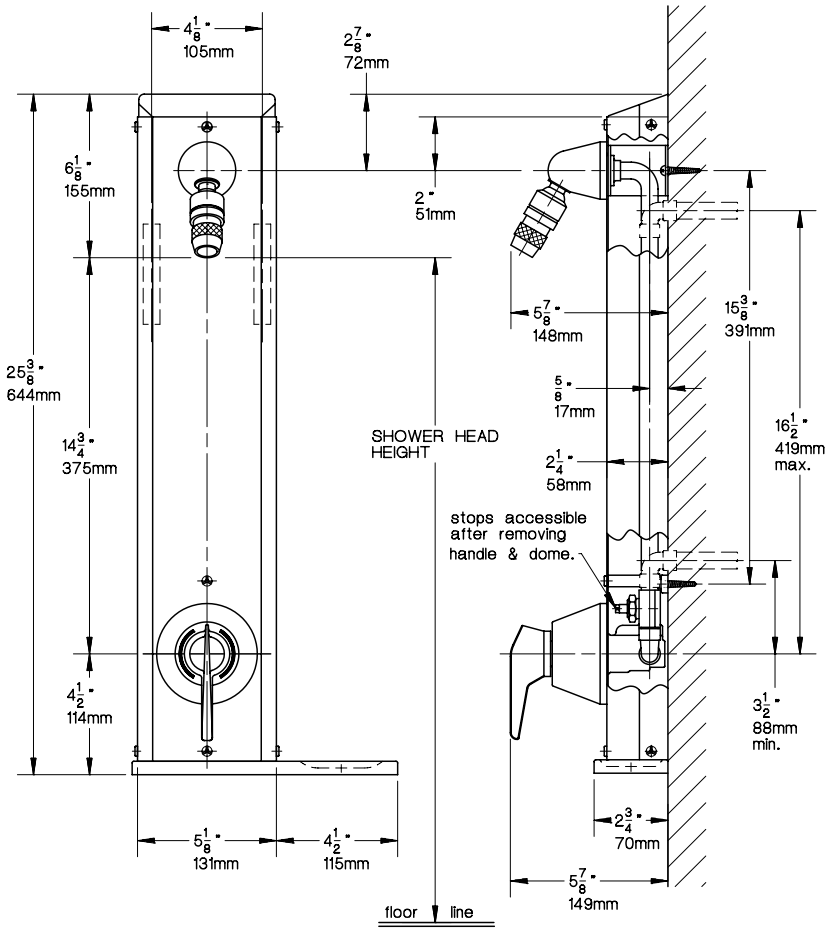

Recommended head heights

Men	6'0"
Boys, Senior High	5'10"
Boys, Junior High	5'7"
Boys, Elementary	5'4"
Women	5'8"
Girls, Senior High	5'8"
Girls, Junior High	5'5"
Girls, Elementary	4'2"

INSTALLATION:

1. With special screwdriver provided remove screw located on shield above valve, remove head bracket with hex socket key, remove large locking nut, remove valve handle with hex socket key, remove dome and nameplate with locking ring. Remove unit cover.
2. Mount valve and piping assembly to wall with screws and anchors provided. Connect supply piping.
3. Replace unit cover and reassemble in reverse order.
4. Install shower head.

ADA

For ADA compliance (Americans with Disabilities Act) consult ADAAG or your state regulations for proper product choice and mounting heights. ADAAG does permit a fixed shower head mounted 48" above the floorin unmonitored facilities where vandalism may be a problem.

INDIVIDUAL PARTS		INDIVIDUAL PARTS		COMPOSITE PARTS	
HP-7	Screw	T-3	Cold renewable seat	KIT-HP	Mounting hardware kit
HP-14A	Screw	T-5	Hot washer screw	KIT-HPEC	Extension cover kit
HP-14B	Star plastic anchors	T-6	Hot washer	TA-4	Hot seat (T-1)
HPN-5	Top cap	T-7	Cold washer retainer		Cold seat (T-3)
HPN-6	Soap dish	T-8	Cold washer		Cold seat O-ring (T-2)
HPN-7	Nameplate	TA-10	Flow control spindle	TA-9	Hot washer screw (T-5)
HPN-9	Shower head bracket	T-11	Cap gasket		Hot washer (T-6),
HPN-10	Dome cover	T-12A	Cap assembly		Cold water retainer (T-7)
HPN-11	Head mounting bracket	T-16	Packing, o-ring and washer		Cold washer (T-8),
HPN-13	Mounting bracket nut	T-17	Packing nut		Cap gasket (T-11)
HPN-14	Head bracket stud	T-20PL	Dome lock nut	TA-10	Spindle assembly
HPN-15	Pipe and shield bracket	T-34	Limit stop with o-ring		
HPN-28	Locking nut	300A	Set screw		
L-23	O-ring	4-282M	Fre-Flo shower head		
LM-26 SW	Service stop complete				
RC-14X	Handle				
SC-15A	Set screw				
T-1	Hot renewable seat				
T-2	Cold seat o-ring				

Tools required for installation:

Slotted screwdriver, phillips screwdriver, soldering equipment, adjustable wrench, channel lock pliers, hex socket keys (1/8" and 3/32"), electric drill with 1/4" drill bit, HY-50 screwdriver (provided)

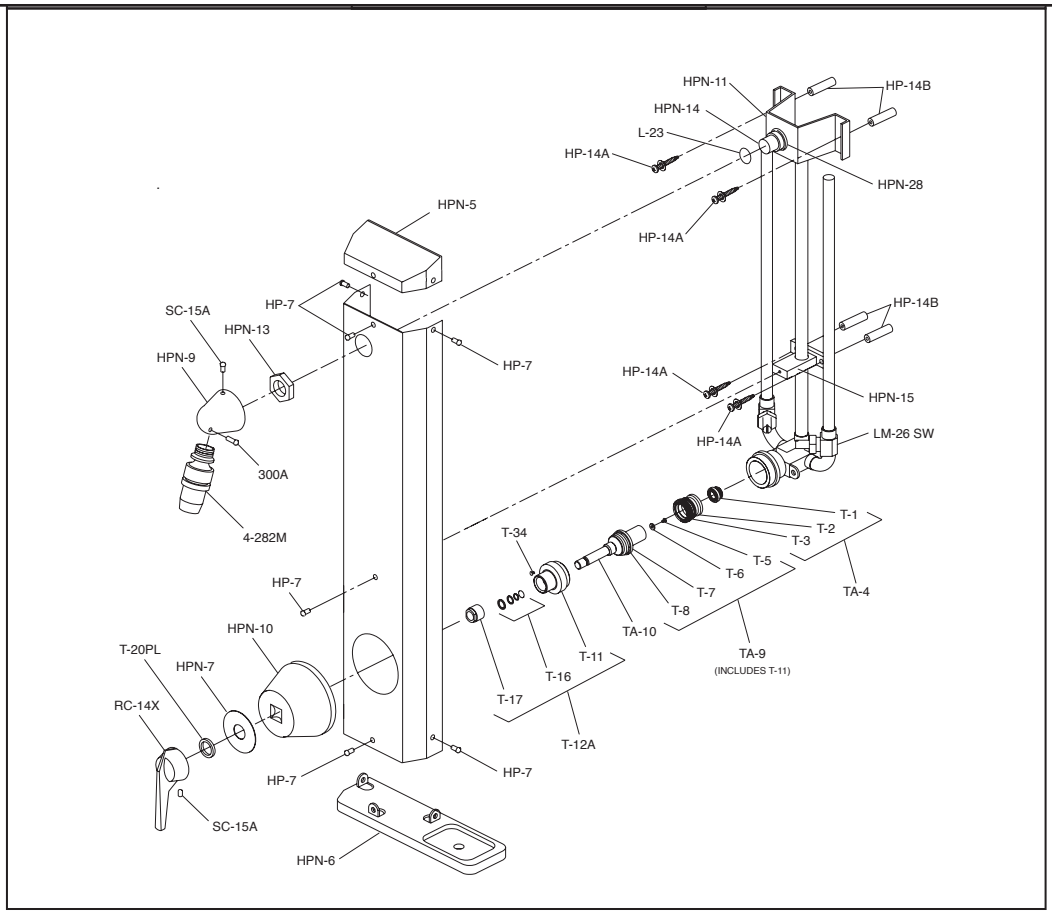

Symmons Industries, Inc. ▪ 31 Brooks Drive ▪ Braintree, MA 02184
(800) 796-6667, (781) 848-2250 ▪ Fax (800) 961-9621, (781) 843-3849
Website: www.symmons.com ▪ Email: customerservice@symmons.com

SYMMONS®
the smart choice™

©2007, 2008 Symmons Industries, Inc. Printed in U.S.A. ▪ ZV-332 ▪ 050208