SPECIFICATIONS

SIRIUS™ SINGLE HANDLE VESSEL LAVATORY FAUCET

Model

D201144

Description

- Ceramic disc valve
- 13" high swivel spout, 5 ½" spout length
- Natural water stream
- Metal grid strainer drain with cover for vessels with or without overflow
- Single hole mount
- 1.2gpm (4.5L/min) maximum flow rate @60 psi
- Meets CEC Requirement

Flow Rate

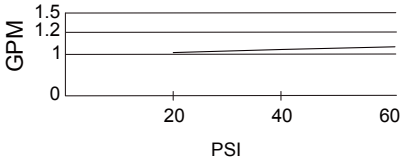

Standards

NSF/ANSI 372

- NSF/ANSI 372

MEETS ASME A112.18.1M/A112.18.1

- ASME A112.18.1M/A112.18.1

- ADA Accessibility Guidelines for Buildings and Facilities - 309.4 Operation for Operable Parts
- WaterSense Pending

Finishes Available

- Chrome
- Other: Refer to Price List for additional finish

Warranty

Danze products are covered by a manufacturer s limited "lifetime" warranty for manufacturing defects.

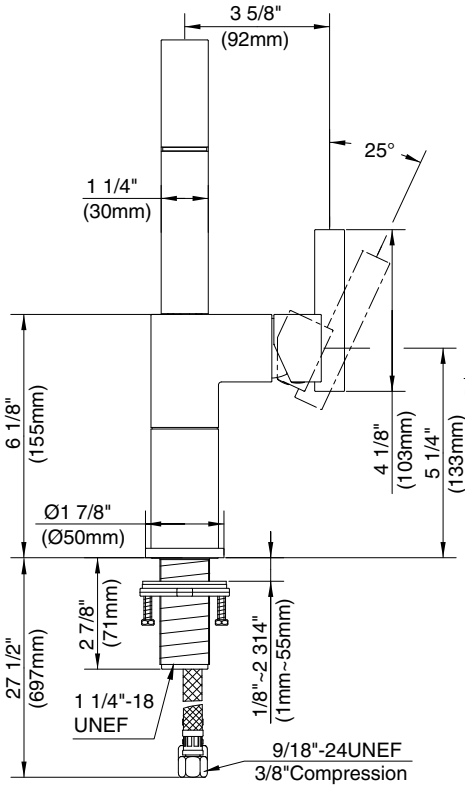

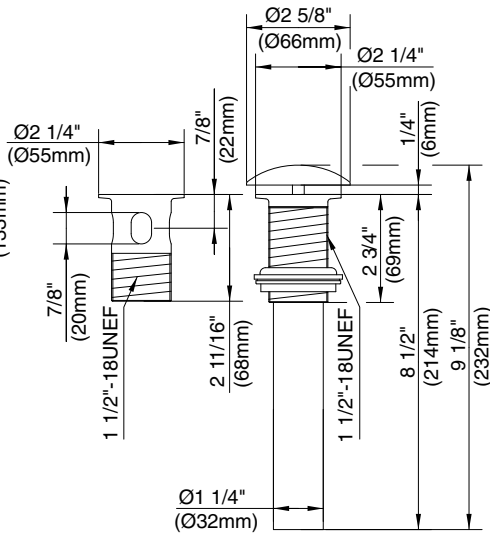

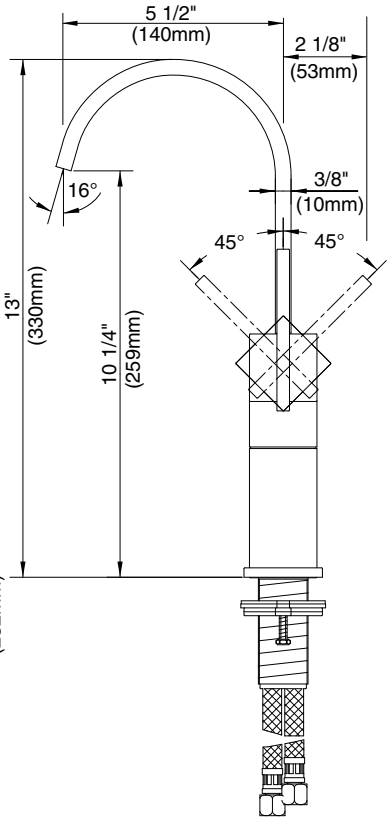

Submittal Information:

Job Name: _____ *Location:* _____

Contractor: _____ *Contact #:* _____