SPECIFICATIONS

PARMA™ SINGLE HANDLE LAVATORY FAUCET

Model

D225658

Description

- Ceramic disc valve
- 2 1/4" high spout, 5" spout length
- Includes metal touch down drain DA505918 with color matching cap and flange and chrome plated tailpiece
- Single hole mount with optional deck plate DA667229 included
- Optional hot and cold button included
- 1.2gpm (4.5L/min) maximum flow rate @60 psi
- Meets CEC Requirement

Flow Rate

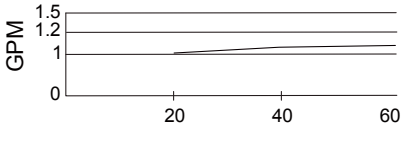

WaterSense Meets EPA Criteria
Certified by IAPMO R&T

Standards

NSF/ANSI 372 • NSF/ANSI 372

MEETS ASME A112.18.1M/ A112.18.1 • ASME A112.18.1M/A112.18.1

• ADA Accessibility Guidelines for Buildings and Facilities - 309.4 Operation and Operable Parts

Finishes Available

- Chrome
- Other: Refer to Price List for additional finish

Warranty

Danze products are covered by a manufacturer's limited "lifetime" warranty for manufacturing defects.

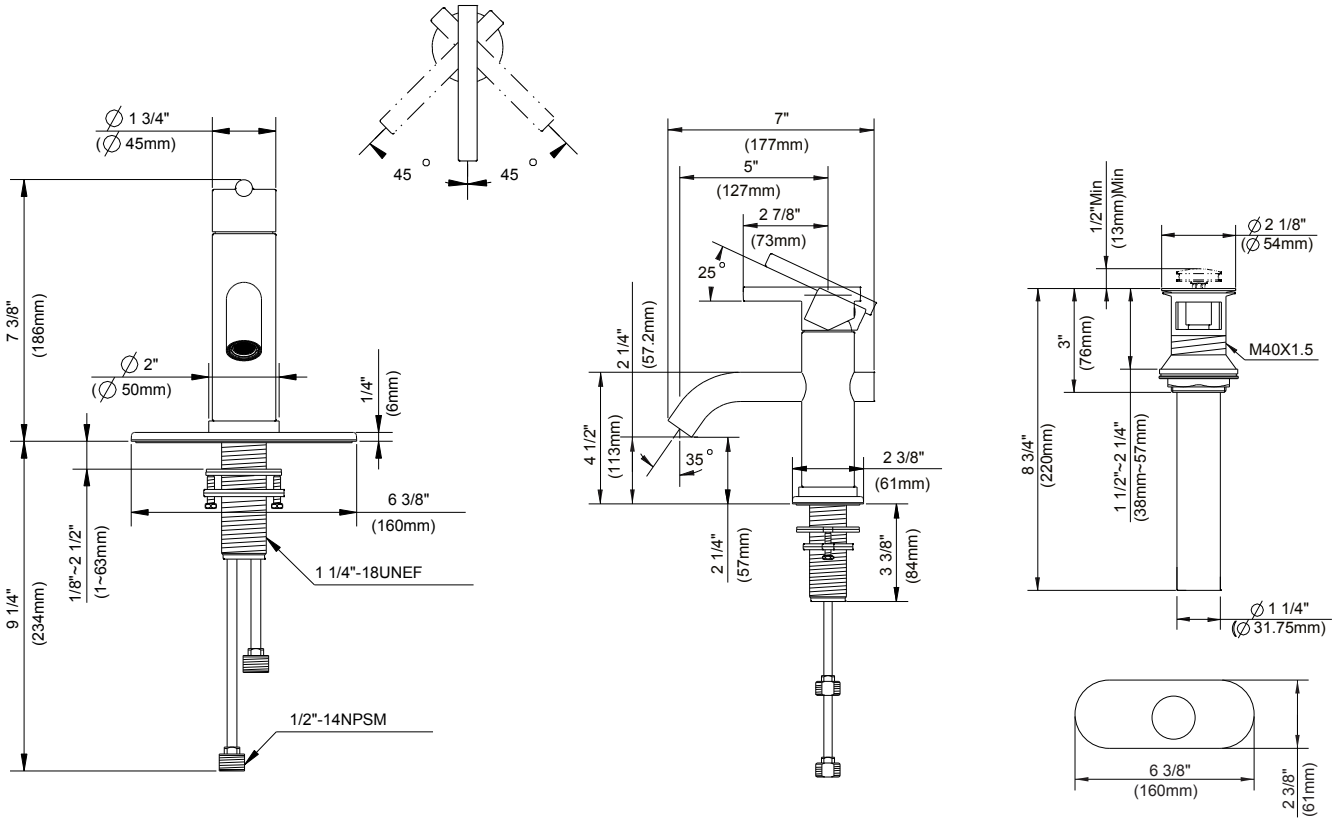

Submittal Information:

Job Name: _____ *Location:* _____

Contractor: _____ *Contact #:* _____