PFISTER

Amherst™

8”-15” Widespread Faucet

LF-049-HA1K Finish*(K)* ❑
LF-049-HA1Y Finish*(Y)* ❑

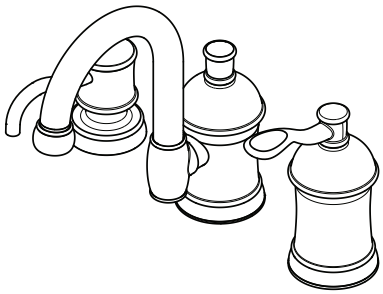

- 3 or 4-Hole Installation
- Push & Seal™ Pop-Up
- Pforever Seal

Specifications

Features

- 1.2 GPM Flow Rate
- Adjustable Install
- All Metal Construction
- Quick Install Tool
- Mounting Hardware Included
- Mounting Posts Included
- Soap Dispenser Included
- Pfast Connect
- Push & Seal™ Pop-Up
- Pforever Seal Ceramic Disc Valves
- Pforever Warranty®

Code Compliance

Pfister products are designed and manufactured in compliance with the following standards and codes:

- IAPMO Certified
- CSA B125 Certified
- ASME A112.18.1
- NSF 61/9 Annex G (Low lead)
- Cal Green Compliant
- EPA WaterSense Certification 1.2 gpm, 4.5 L/Min
- ADA Compliant-ANSI A117.1 (Lever handles only)

Dimensions

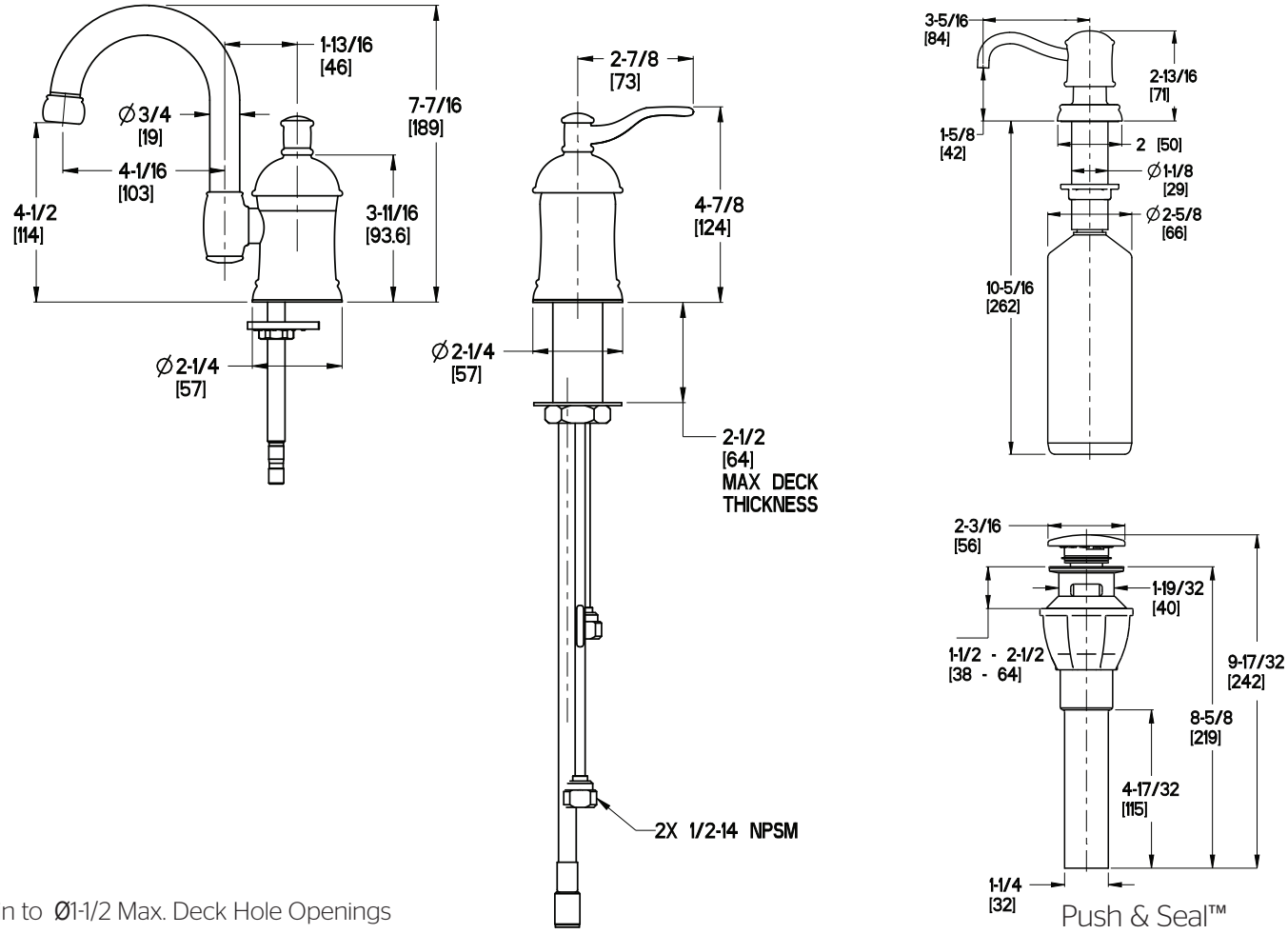

Ø1 Min to Ø1-1/2 Max. Deck Hole Openings

Copyright © 2015, Pfister Inc.