PFISTER

Bronson™

4" Centerset Lavatory Faucet

LG48-BSOC Finish*(C)* ❑
LG48-BSOK Finish*(K)* ❑
LG48-BSOY Finish*(Y)* ❑

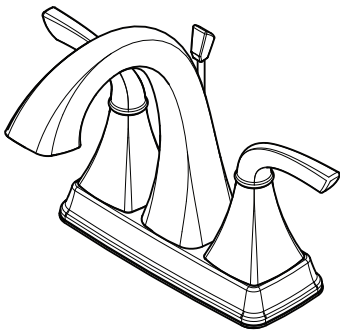

Specifications

- All Metal Construction
- Pforever Seal

Features

- 1.2 GPM Flow Rate
- All Metal Construction
- Metal Drain
- Pforever Seal Ceramic Disc Valves
- Pforever Warranty®

Code Compliance

Pfister products are designed and manufactured in compliance with the following standards and codes:

- IAPMO Certified
- CSA B125 Certified
- ASME A112.18.1
- Cal Green Compliant
- NSF 61/9 Annex G (Low lead)
- EPA WaterSense Certification 1.2 gpm, 4.5 L/Min
- ADA Compliant-ANSI A117.1 (Lever handles only)

Dimensions

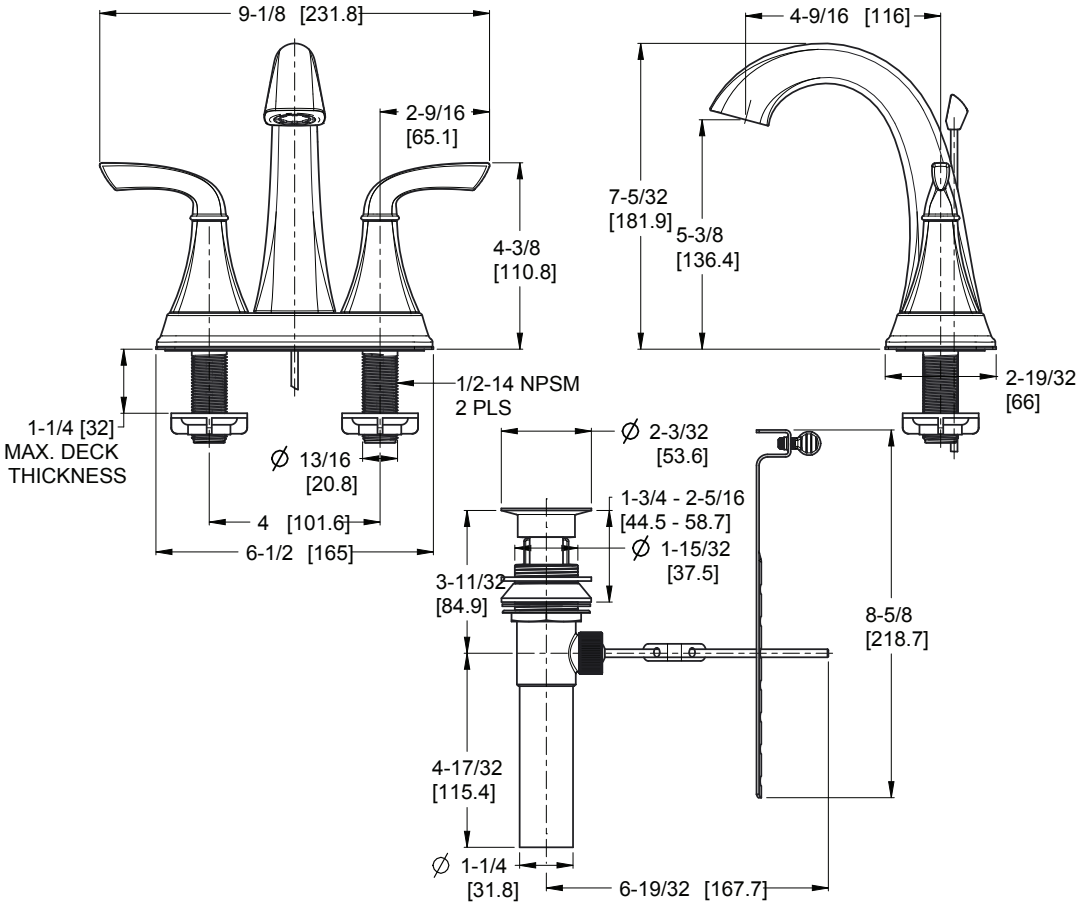

Ø1 Min to Ø1-1/2 Max. Deck Hole Openings

All Metal Drain

Copyright © 2016, Pfister Inc.