PFISTER

Pfirst Series™

Lavatory Faucet

G149-5100 Finish*(PC)* ❑
G149-6100 Finish*(PC)* ❑
G149-610K Finish*(KK)* ❑
G149-610Y Finish*(YY)* ❑

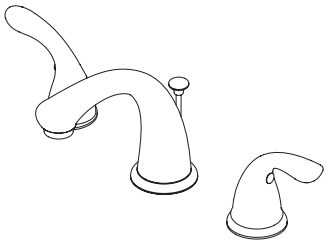

- Lever Handles
- 3-Hole Installation
- Pforever Seal
- Metal Pop-Up

Specifications

Features

- Metal Lever Handles
- 8"-15" Variable Installation
- 2.2 GPM (8.3 L/M) Flow Rate (149 Only)
- Less Pop-Up (5100 Only)
- Metal Pop-Up (610* Only)
- Includes Cap For Pop-Up Hole (5100 Only)
- Pforever Seal Ceramic Disc Valves
- Pforever Warranty®

Code Compliance

Pfister products are designed and manufactured in compliance with the following standards and codes:

- IAPMO Certified
- CSA B125 Certified
- ASME A112.18.1
- NSF 61/9 Annex G (Low lead) (G149 Only)
- Cal Green Compliant (G149 Only)
- EPA Watersense Certification 1.5 gpm, 5.7L/Min (G149 Only)
- ADA Compliant-ANSI A117.1 (Lever handles only)

Dimensions

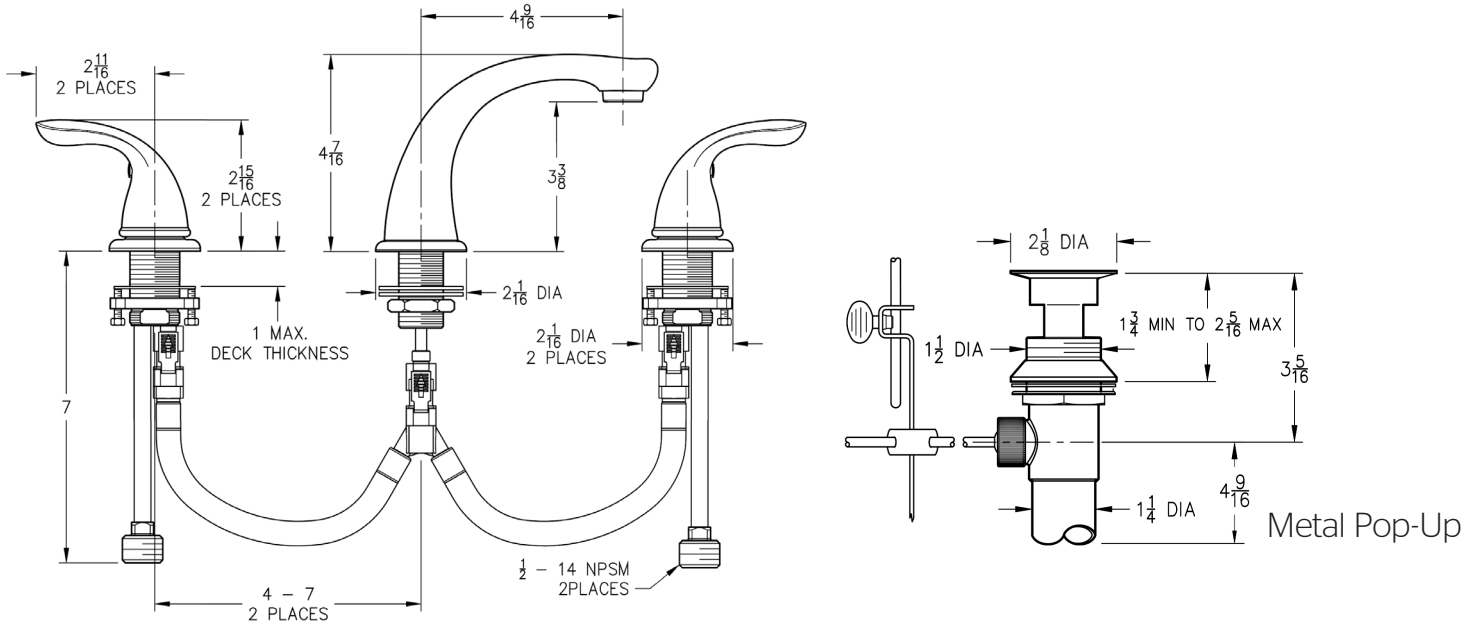

Ø1 Min to Ø1-1/2 Max. Deck Hole Openings

Copyright © 2013, Pfister Inc.