MOEN

Buy it for looks. Buy it for life.®

Illustrated Parts

■ **Order by Part Number**

ALIGN™
Single Handle Pre-Rinse Spring Pulldown Kitchen Faucet

MODEL	HANDLE	FINISH
5923	Lever	Chrome
5923SRS	Lever	Spot Resist Stainless
5923BL	Lever	Matte Black

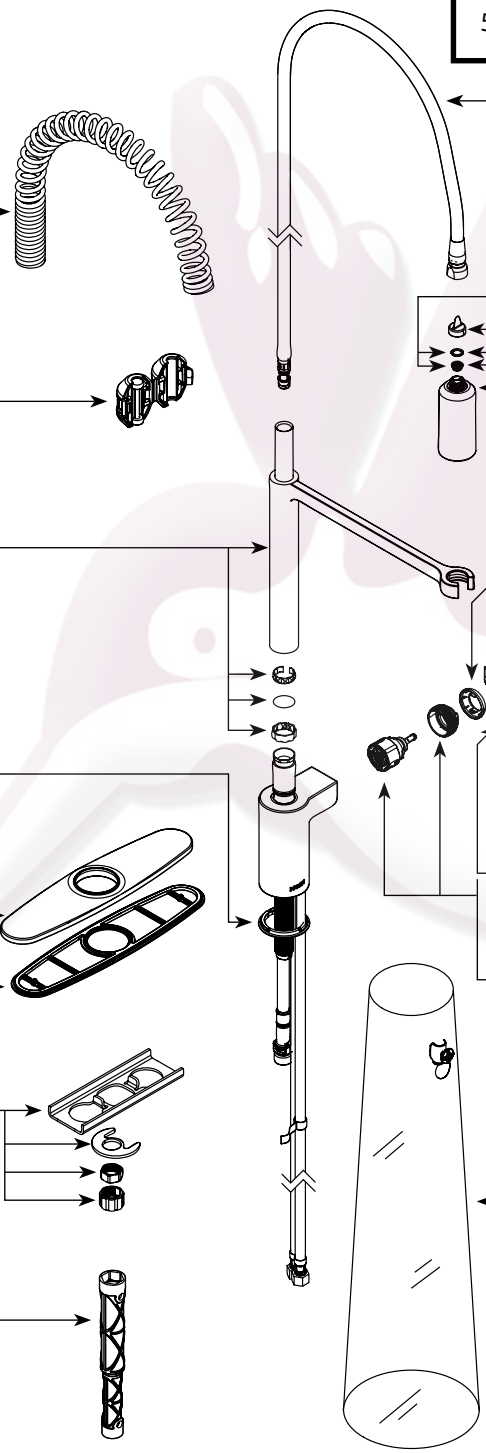

Pulldown Hose Kit

150259 Chrome
150259CST Classic Satine (Use with Spot Resist Stainless)
191751BL Matte Black

Spring & Bearing Kit

181930 Chrome
181930SRS Spot Resist Stainless
181930BL Matte Black

O-ring and Screen Kit

158550

Weight Kit

150260

Wand Kit *(1.5gpm)*

173816 Chrome
173816SRS Spot Resist Stainless
173816BL Matte Black

Handle Dome

160660 Chrome
160660SRS Spot Resist Stainless
160660BL Matte Black

Swing Arm & Collar Kit

181929 Chrome
181929SRS Spot Resist Stainless
181929BL Matte Black

Handle Kit

168494 Chrome
168494SRS Spot Resist Stainless
168494BL Matte Black

Plug Button

152859 Chrome
152859CSL Classic Stainless *(Used for Spot Resist Stainless)*
152859BL Matte Black

Gasket Kit

168498

Set Screw

155023 *(requires 3/32" hex key)*

Escutcheon
(Option sold separately)

141002 Chrome
141002SRS Spot Resist Stainless
141002BL Matte Black

Cartridge, Cartridge Nut, and Set Screw

160657

Mounting Hardware

113173

Hose Corral
(Option sold separately)

159060

Installation Tool

118305

GRUPO COMERCIAL COLIBRÍ DE MONTERREY

Tel.8375.0992/93, 8372.3713/14/15
Prol.Ruiz Cortines #307 Pte. Col.Paseo de Cumbres Mty N.L. C.P.64346
www.colibrimty.com colibrimty