Dryer

User manual

DV50K7500E(G)*, DV45K6500E(G)*, DV45K6200E(G)*

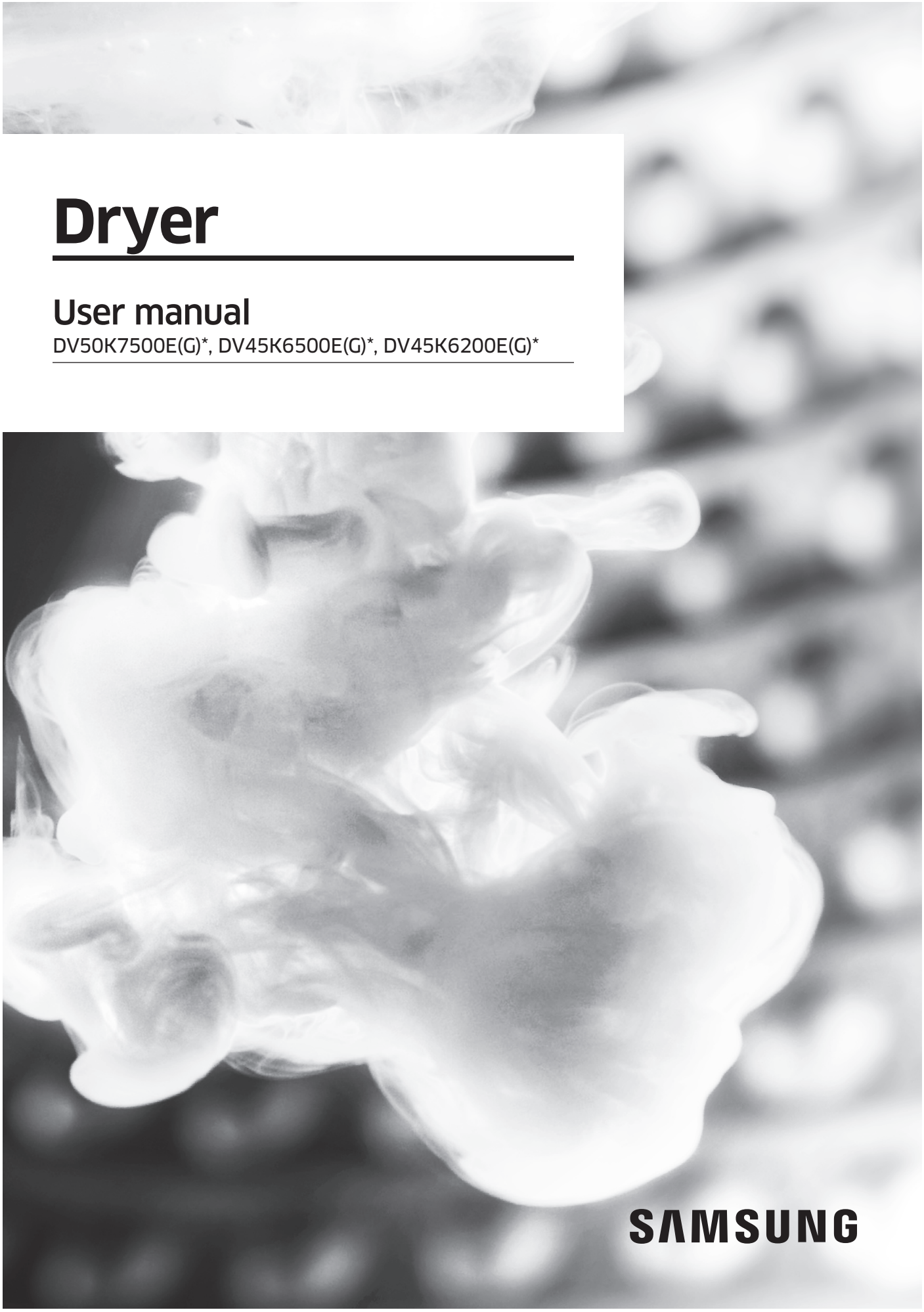

SAMSUNG

Contents

Contents

Safety information 4

What you need to know about the safety instructions 4
Important safety symbols 4
Important safety precautions 6
Warnings 8
Cautions 8

Installation requirements 10

Key installation requirements 10
Location considerations 10
Alcove or closet installations 11
Ducting requirements 14
Exhausting requirements 15
Gas requirements 16
Electrical requirements 17

Installation 19

What's included 19
Step-by-step installation 21
Vent blockage test 31
Exhaust ducting guide 32
Door reversal 33

Before you start 36

Sort and load 36
Functional prerequisite 36
Rack Dry (applicable models only) 37

Operations 39

Feature panel 39
Simple steps to start 44
Cycle overview 45
Drying guide 46
Special features 48
Samsung Smart Home (applicable models only) 50

DV7500K-03381C-02_EN.indd 2 4/7/2016 5:05:38 PM

Maintenance 55

Vent sensor 55
Cleaning 56

Troubleshooting 57

Checkpoints 57
Samsung Smart Home 60
Information codes 61

Specifications 62

Fabric care chart 62
Protecting the environment 63
Specification sheet 64
Cycle chart 65

DV7500K-03381C-02_EN.indd 3 4/7/2016 5:05:38 PM

Safety information

Congratulations on your new Samsung dryer. This manual contains important information on the installation, use and care of your appliance. Please take some time to read this manual to take full advantage of your dryer's many benefits and features.

What you need to know about the safety instructions

Please read this manual thoroughly to ensure that you know how to safely and efficiently operate the extensive features and functions of your new appliance. Please store the manual in a safe location close to the appliance for future reference. Use this appliance only for its intended purpose as described in this instruction manual.

Warnings and Important Safety Instructions in this manual do not cover all possible conditions and situations that may occur. It is your responsibility to use common sense, caution and care when installing, maintaining and operating your dryer.

Because the following operating instructions cover various models, the characteristics of your dryer may differ slightly from those described in this manual and not all warning signs may be applicable. If you have any questions or concerns, contact your nearest service center or find help and information online at www.samsung.com.

Important safety symbols

What the icons and signs in this user manual mean:

WARNING

Hazards or unsafe practices that may result in severe personal injury, death and/or property damage.

CAUTION

Hazards or unsafe practices that may result in personal injury and/or property damage.

NOTE

Indicates that a risk of personal injury or material damage exists.

SAVE THESE INSTRUCTIONS

DV7500K-03381C-02_EN.indd 4 4/7/2016 5:05:38 PM

These warning signs are here to prevent injury to yourself and others.
Please follow them explicitly.
After reading this manual, store it in a safe place for future reference.
Read all instructions before using the appliance.
As with any equipment that uses electricity and moving parts, potential hazards exist.
To safely operate this appliance, familiarize yourself with its operation and exercise care when using it.

⚠ WARNING - Gas Appliances:

- State of California Proposition 65 Warning (US only)
  This product contains chemicals known to the State of California to cause cancer and birth defects or other reproductive harm.
- Gas appliances can cause low-level exposure to Proposition 65 listed substances, including but not limited to, benzene, carbon monoxide, formaldehyde and soot, substances resulting from the incomplete combustion of natural gas or LP fuels.

⚠ WARNING - Risk of Fire

- Clothes dryer installation must be performed by a qualified installer.
- Install the clothes dryer according to the manufacturer's instructions and local codes.
- Do not install a clothes dryer with flexible plastic venting materials. If flexible metal (foil type) duct is installed, it must be of a specific type identified by the appliance manufacturer as suitable for use with clothes dryers. Flexible venting materials are known to collapse, be easily crushed, and trap lint. These conditions will obstruct clothes dryer airflow and increase the risk of fire.
- To reduce the risk of severe injury or death, follow all installation instructions.
- Save these instructions.

SAVE THESE INSTRUCTIONS

DV7500K-03381C-02_EN.indd 5 4/7/2016 5:05:38 PM

Safety information

Important safety precautions

⚠ **WARNING**

To reduce the risk of fire, electric shock, or injury to persons when using your appliance, follow basic precautions, including the following:

1. Read all instructions before using this appliance.
2. Do not dry articles that have been previously cleaned in, washed in, soaked in, or spotted with gasoline, dry-cleaning solvents, or other flammable or explosive substances, as they give off vapors that could ignite or explode.
3. Do not use the dryer to dry clothes which have traces of any flammable substance, such as vegetable oil, cooking oil, machine oil, flammable chemicals, paint thinner, etc., or anything containing wax or chemicals, such as mops and cleaning cloths. Flammable substances may cause the fabric to catch fire by itself.
4. Do not store or use gasoline or other flammable vapors and liquids near this or any other appliance.
5. Do not allow children to play on or in the appliance. Close supervision of children is necessary when the appliance is used near children.
6. Before the appliance is removed from service or discarded, remove the door to the drying compartment.
7. Do not reach into the appliance if the drum is moving.
8. Do not install or store this appliance where it will be exposed to the weather.
9. Do not tamper with internal controls.
10. Do not repair or replace any part of the appliance or attempt any service unless specifically recommended in the user-maintenance instructions or in published user-repair instructions that you understand and have the skills to carry out.
11. Do not use fabric softeners or products to eliminate static unless recommended by the manufacturer of the fabric softener or product.
12. Clean the lint screen before or after each load.
13. Do not use heat to dry articles containing foam rubber or similarly textured rubber-like materials.
14. Keep area around the exhaust opening and adjacent surrounding areas free from the accumulation of lint, dust, and dirt.
15. The interior of the appliance and exhaust duct should be cleaned periodically by qualified service personnel.

SAVE THESE INSTRUCTIONS

DV7500K-03381C-02_EN.indd 6 4/7/2016 5:05:38 PM

16. Do not place items exposed to cooking oils in your dryer. Items contaminated with cooking oils may contribute to a chemical reaction that could cause a load to catch fire.
17. This appliance must be grounded. See “Electrical requirements” and ”Grounding” in “Installation” section.
18. Do not allow children to play on or in the appliance. Close supervision of children is necessary when the appliance is used near children.
19. Do not insert your hand under the dryer.
    - This may result in injury.
20. Take care that children’s fingers are not caught in the door when closing it.
    - This may result in injury.
21. The control board and inlet valve are intentionally not grounded and may present a risk of electric shock only during servicing.
    - Do not contact these parts while the appliance is energized.

⚠ WARNING - To reduce the risk of fire or explosion:

- Do not dry items that have been previously cleaned, washed, soaked, or spotted with gasoline, dry cleaning solvents, or other flammable or explosive substances. They emit vapors that could ignite or explode. Any material that has been in contact with a cleaning solvent or flammable liquids or solids should not be placed in the dryer until all traces of these flammable liquids or solids and their fumes have been removed. There are many highly flammable items used in homes, such as acetone, denatured alcohol, gasoline, kerosene, some liquid household cleaners, some spot removers, turpentine, waxes, and wax removers.
- Items containing foam rubber (which may be labeled latex foam) or similarly textured rubberlike materials must not be dried on a heat setting. Heated foam rubber materials can, under certain circumstances, ignite spontaneously.

SAVE THESE INSTRUCTIONS

DV7500K-03381C-02_EN.indd 7 4/7/2016 5:05:38 PM

Safety information

⚠ WARNING - What to do if you smell gas:

- Do not try to light any appliance.
- Do not turn on the appliance.
- Do not touch any electrical switch.
- Do not use any phone in your building.
- Clear the room, building or area of all occupants.
- Immediately call your gas supplier from a neighbor's phone. Follow the gas supplier's instructions.
- If you cannot reach your gas supplier, call the fire department.
- Installation and service must be performed by a qualified installer, service agency, or the gas supplier.

Warnings

⚠ WARNING

- Ensure pockets are free of small, irregularly shaped hard objects and foreign material, i.e. coins, knives, pins, etc. These objects could damage your dryer.
- Gas leaks may occur in your system, resulting in a dangerous situation.

Cautions

⚠ CAUTION

- Do not allow children or pets to play on, in, or in front of the appliance. Close supervision is necessary when the appliance is used near children and pets.
- Before discarding or removing your dryer from service, remove the door to the drying compartment to prevent children or animals from becoming trapped inside.
- Do not reach into the appliance when the drum is moving.
- Do not install or store this appliance where it will be exposed to the weather.
- Do not tamper with the controls.
- Do not repair, replace, or attempt to service any part of the appliance unless specifically instructed to in the user-repair instructions and you have the understanding and skills to carry out the procedure.

SAVE THESE INSTRUCTIONS

DV7500K-03381C-02_EN.indd 8 4/7/2016 5:05:38 PM

- Do not use fabric softeners or products to eliminate static unless the softener or product is recommended for dryer use by the manufacturer of the fabric softener or product.
- Clean the lint screen before or after each load.
- Keep the area around the exhaust opening and surrounding areas free from lint, dust, and dirt.
- The interior of the dryer and exhaust duct should be cleaned periodically by qualified service personnel.
- This appliance must be properly grounded. Never plug the power cord into a receptacle that is not grounded adequately or not in accordance with local and national codes. See the installation instructions for information about grounding this appliance.
- Do not sit on top of the dryer.
- Do not dry clothing with large buckles, buttons, or other heavy metal or solid objects.
- Gas leaks may not be detected by smell alone.
- Gas suppliers recommend you purchase and install a UL-approved gas detector.
- Install and use in accordance with the manufacturer's instructions.
- Do not place items in your dryer that have been spotted or soaked with vegetable oil or cooking oil. Even after being washed, these items may contain significant amounts of these oils.
- Residual oil on clothing can ignite spontaneoulsy. The potential for spontaneous combustion increases when items containing vegetable oil or cooking oil are exposed to heat. Heat sources such as your dryer can warm these items, allowing an oxidation reaction in the oil to occur. Oxidation creates heat. If this heat cannot escape, the items can become hot enough to catch fire. Piling, stacking, or storing these kinds of items may prevent heat from escaping and can create a fire hazard.
- All washed and unwashed fabrics that contain vegetable oil or cooking oil can be dangerous.
  Washing these items in hot water with extra detergent will reduce, but not eliminate, the hazard. Always use the Cool Down cycle for these items to reduce their temperature. Never remove these items from the dryer hot or interrupt the drying cycle until the items have run through the Cool Down cycle. Never pile or stack these items when they are hot.

SAVE THESE INSTRUCTIONS

DV7500K-03381C-02_EN.indd 9 4/7/2016 5:05:38 PM

Installation requirements

Read through the following instructions before installing the dryer and keep this manual for future reference.

⚠ **WARNING**

The control board and inlet valve are intentionally not grounded and may present a risk of electric shock only during servicing.
Service personnel - Do not contact these parts while the appliance is energized.

Key installation requirements

- A grounded electrical outlet.
- A power cord for electric dryers (except in Canada).
- Gas lines (for gas models) that must meet national and local regulations.
- An exhaust system made of rigid metal or flexible stiff-walled metal exhaust ducting.

⚠ **WARNING**

Remove the door from all discarded appliances to prevent a child from suffocating.

Location considerations

The dryer should be located where there is enough space at the front for loading the dryer, and enough space behind for the exhaust system. This dryer is factory-ready for the rear exhaust option. To exhaust out the bottom, right or the left, use the accessory exhaust kit. Instructions are included with the kit. Make sure the room in which the dryer is located has enough fresh air. The dryer must be located where there are no air-flow obstructions. For gas dryers, adequate clearance must be maintained as noted on the data plate to ensure adequate air for combustion and the proper dryer operation.

The dryer must not be installed or stored in an area where it will be exposed to water and/or weather. The dryer area must be kept clear of combustible materials, gasoline, and other flammable vapors and liquids. A dryer produces combustible lint. The area around the dryer should be kept lint-free.

DV7500K-03381C-02_EN.indd 10 4/7/2016 5:05:38 PM

Alcove or closet installations

⚠ **WARNING**

- The dryer must be exhausted to the outside to reduce the risk of fire when installed in an alcove or closet.
- No other fuel-burning appliance should be installed in the same closet as the dryer.

Minimum clearances between the dryer and adjacent walls or other surfaces:

Sides	1 in. (25 mm)	Rear	5.9 in. (150 mm)
Top	17 in. (432 mm)	Closet front	2 in. (51 mm)

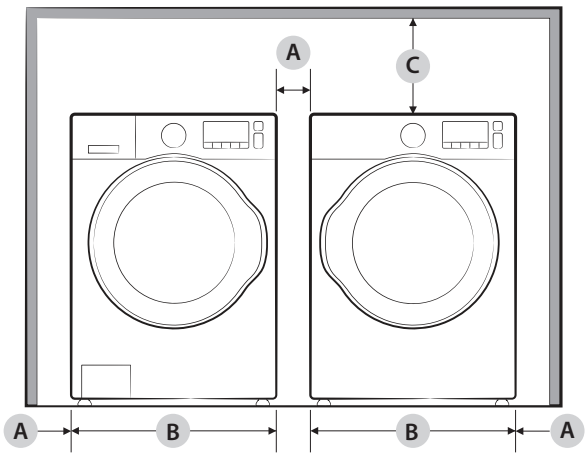

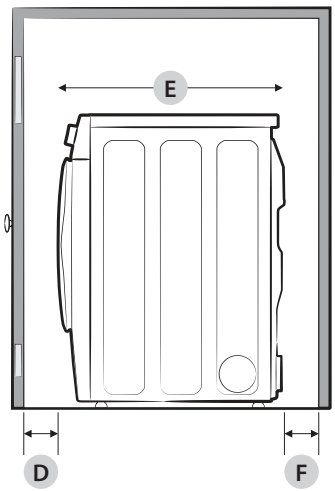

A	1 in. (25 mm)	**D**	2 in. (50 mm)
B	27 in. (686 mm)	**E**	32.6 in. (828 mm) - DV50K7500* 32.4 in. (823 mm) - DV45K6500*, 6200*
C	17 in. (432 mm)	**F**	5 in. (127 mm)

DV7500K-03381C-02_EN.indd 11 4/7/2016 5:05:39 PM

Installation requirements

Installation with pedestal

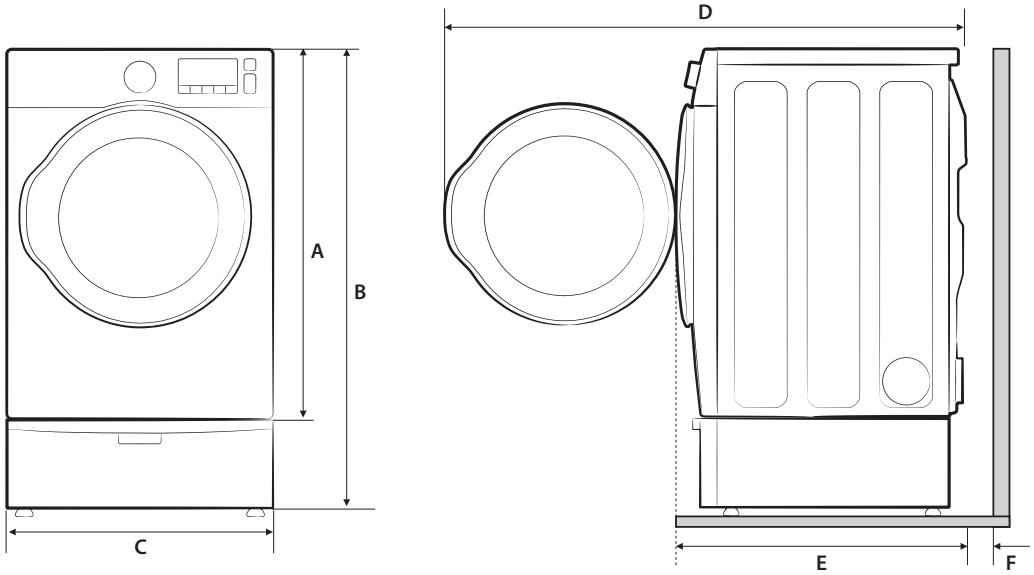

A	38.7 in. (984 mm)	**D**	53.1 in. (1350 mm) - DV50K7500* 53 in. (1345 mm) - DV45K6500*, 6200* to clear open door
B	53.3 in. (1355 mm)	**E**	32.6 in. (828 mm) - DV50K7500* 32.4 in. (823 mm) - DV45K6500*, 6200*
C	27 in. (686 mm)	**F**	5 in. (127 mm)

DV7500K-03381C-02_EN.indd 12 4/7/2016 5:05:39 PM

Installation with stacked washing machine and dryer

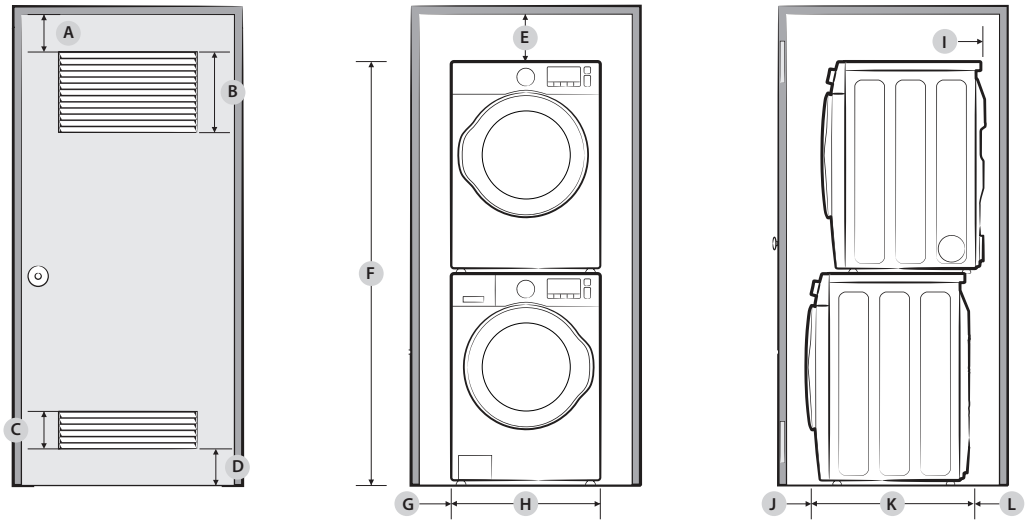

A	3 in. (76 mm)	**G**	1 in. (25 mm)
B	48 in². (3100 mm²)	**H**	27 in. (686 mm)
C	24 in². (1550 mm²)	**I**	5 in. (127 mm)
D	3 in. (76 mm)	**J**	3 in. (76 mm)
E	6 in. (152 mm)	**K**	34.2 in. (869 mm)
F	78.5 in. (1994 mm)	**L**	8 in. (203 mm)

NOTE

The front of the closet must have two unobstructed air openings **(B, C)** for a combined minimum total area of 72 in² (465 cm²) with a minimum clearance of 3 in. (7.6 cm) at the top **(A)** and bottom **(D)**.

External exhaust elbow requires additional space **(L)**.

NOTE

Stacking (MODEL NO: SKK-7A)

Samsung's Washer and Dryer can be stacked to maximize usable space.

The dryer legs need to be removed to stack the Washer and Dryer. You can purchase an optional stacking kit from your Samsung retailer.

DV7500K-03381C-02_EN.indd 13 4/7/2016 5:05:39 PM

Installation requirements

Ducting requirements

	Recommended		Use only for short-run installation	
Weather hood type	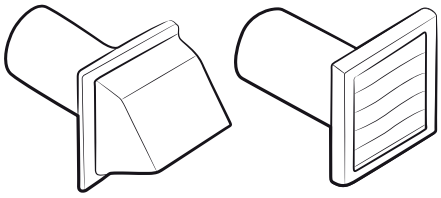 4” (10.2 cm)		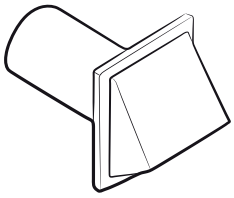 2.5” (6.4 cm)	
No. of 90° elbows	Rigid	Metallic flexible*	Rigid	Metallic flexible*
0	80 ft. (24.4 m)	41 ft. (12.4 m)	74 ft. (22.6 m)	33 ft. (10.1 m)
1	68 ft. (20.7 m)	37 ft. (11.2 m)	62 ft. (18.9 m)	29 ft. (8.8 m)
2	57 ft. (17.4 m)	33 ft. (10.1 m)	51 ft. (15.5 m)	25 ft. (7.6 m)
3	47 ft. (14.3 m)	29 ft. (8.8 m)	41 ft. (12.5 m)	21 ft. (6.5 m)

NOTE

* Use a 4-inch (10.2 cm) diameter rigid aluminum or galvanized steel duct.

If you integrate the dryer’s vent system with an existing exhaust system:

- Make sure the exhaust system meets all applicable local, state, and national regulations.
- Verify you are not using flexible plastic duct.
- Make sure to check for and remove all lint buildup from inside the existing ducts.
- Confirm the duct is not kinked or crushed.
- Make sure the exhaust hood damper opens and closes freely.

Manometer measurements

The static pressure in any exhaust system must not exceed 0.83 inches of water column or be less than 0. Note that these values are measured with the dryer running with a manometer presented to the exhaust duct that connects to the dryer. The dryer tumbler must be empty and lint filter clean.

DV7500K-03381C-02_EN.indd 14 4/7/2016 5:05:39 PM

Exhausting requirements

The dryer must not be exhausted into a chimney, a wall, a ceiling, an attic, a crawl space, or a concealed space of a building. Exhausting the dryer to the outside will prevent large amounts of lint and moisture from being blown into the room.

In the United States and Canada

- All dryers must be exhausted to the outside.
- The required exhaust duct is 4 inches (10.2 cm) in diameter.
- See "Ducting requirements" in the "Installation" section for the maximum duct length and number of bends that can be used.
- The total length of flexible metal duct must not exceed 7' 10½" (2.4 m).
- Do not assemble the duct with screws or other fasteners that extend into the duct and catch lint.
- For the United States only: Use only those foil-type flexible ducts, if any, specifically identified for use with the appliance by the manufacturer and that comply with the Outline for Clothes Dryer Transition Duct. Use Subject 2158A.

Outside the United States and Canada

- Refer to the local codes.

⚠ **WARNING**

- You must exhaust the dryer to the outside to reduce the risk of fire when you install the dryer in an alcove or closet.
- Do not use a plastic or non-metal flexible duct.
- If your existing ductwork is plastic, non-metal, or combustible, replace it with metal.
- Use only a metal exhaust duct that is non-flammable to ensure containment of exhaust air, heat, and lint.

DV7500K-03381C-02_EN.indd 15 4/7/2016 5:05:39 PM

Installation requirements

Gas requirements

WARNING

- Use only natural or LP (liquid propane) gases.
- THE INSTALLATION MUST CONFORM WITH LOCAL CODES, OR IN THE ABSENCE OF LOCAL CODES, WITH THE NATIONAL FUEL GAS CODE ANSI/Z223.1, LATEST REVISION (FOR THE UNITED STATES), OR WITH THE CAN / CGA-B149 INSTALLATION CODES (FOR CANADA).
- Gas dryers are equipped with a burner vent for use with natural gas. If you plan to use your dryer with LP (liquid propane) gas, it must be converted for safe and proper performance by a qualified service technician.
- A 1/2” (1.27 cm) gas supply line is recommended and must be reduced to connect to the 3/8” (1 cm) gas line on your dryer. The National Fuel Gas Code requires that an accessible, approved manual gas shut-off valve be installed within 6” of your dryer.
- Gas dryers installed in residential garages must be raised 18 inches (46 cm) above the floor.
- Additionally, a 1/8” (0.3 cm) N.P.T. (National Pipe Thread) plugged tapping, accessible for test gauge connection, must be installed immediately upstream of your dryer’s gas supply connection.
- Your dryer must be disconnected from the gas supply pipe system during any pressure testing of the system.
- Do not reuse old flexible metal gas lines. Flexible gas lines must be design certified by the American Gas Association (CGA in Canada).

NOTE

- Your dryer uses an automatic ignition system to ignite the burner. There is no constant burning pilot.
- Any pipe joint compound used must be resistant to the action of any liquefied petroleum gas.
- As a courtesy, most local gas utilities will inspect a gas appliance installation.

Commonwealth of Massachusetts installation instructions

Your dryer must be installed by a licensed plumber or gas fitter. A “T” handle manual gas valve must be installed in the gas supply line to your dryer. If a flexible gas connector is used to install your dryer, the connector can be no longer than 3’ (36”).

WARNING

- Gas leaks may occur in your system, creating a dangerous situation.
- Gas leaks may not be detected by smell alone.
- Gas suppliers recommend you purchase and install a UL-approved gas detector.
- Install and use in accordance with the manufacturer’s instructions.

DV7500K-03381C-02_EN.indd 16 4/7/2016 5:05:39 PM

Electrical requirements

The wiring diagram is located on the plate under the control panel or rear frame.

⚠ **WARNING**

- Improperly connecting the equipment grounding conductor can result in a risk of electric shock. Check with a qualified electrician or serviceman if you are in doubt as to whether your dryer is properly grounded. Do not modify the plug provided with your dryer – if it doesn't fit the outlet, have a proper outlet installed by a qualified electrician.
- To prevent unnecessary risk of fire, electrical shock, or personal injury, all wiring and grounding must be done in accordance with local codes, or in the absence of local codes, in accordance with the National Electrical Code, ANSI/NFPA No. 70-Latest Revision (for the U.S.) or the Canadian Electrical Code CSA C22.1 – Latest Revisions and local codes and ordinances. It is your responsibility to provide adequate electrical service for your dryer.
- All gas installations must be done in accordance with the national Fuel Code ANSI/Z2231 – Latest Revision (for the U.S.) or CAN/CGA – B149 Installation Codes – Latest Revision (for Canada) and local codes and ordinances.

Grounding

This dryer must be grounded. In the event of a malfunction or breakdown, the ground will reduce the risk of electrical shock by providing a path of least resistance for the electrical current.

Gas models

⚠ **WARNING**

- Your dryer has a cord with an equipment-grounding conductor and a grounding plug. The plug must be plugged into an appropriate outlet that is properly installed and grounded in accordance with all local codes and ordinances.
- Do not modify the plug provided with your dryer – if it doesn't't fit the outlet, have a proper outlet installed by a qualified electrician.
- Do not connect the ground wire to plastic plumbing lines, gas lines, or hot water pipes.

Electric models

⚠ **WARNING**

- Your dryer has an optional cord with an equipment-grounding conductor and a grounding plug. This cord is sold separately.
- The plug must be plugged into an appropriate outlet that is properly installed and grounded in accordance with all local codes and ordinances.
- Do not modify the plug provided with your dryer – if it doesn't't fit the outlet, have a proper outlet installed by a qualified electrician.

DV7500K-03381C-02_EN.indd 17 4/7/2016 5:05:40 PM

Installation requirements

- If a power cord is not used and the electric dryer is to be permanently wired, the dryer must be connected to a permanently grounded metal wiring system, or an equipment grounding conductor must be run with the circuit conductors and connected to the equipment grounding terminal or lead on the dryer.

Electrical connections

Before operating or testing, follow all grounding instructions in the "Grounding" section. An individual branch (or separate) circuit serving only your dryer is recommended.

Do not use an extension cord.

Gas models – U.S. and Canada

A 120 volt, 60 Hz AC approved electrical service with a 15-ampere fuse or circuit breaker is required.

Electric models – U.S. only

Most U.S. dryers require a 120 / 240 volt, 60 Hz AC approved electrical service. Some require 120 / 208 volt, 60 Hz approved electrical service. The electric service requirements can be found on the data label located behind the door. A 30-ampere fuse or circuit breaker on both sides of the line is required.

- If a power cord is used, the cord should be plugged into a 30-ampere receptacle.
- The power cord is not provided with U.S. electric model dryers. This cord is sold separately.

WARNING

Risk of Electric Shock

When local codes allow, you can connect the dryer's electrical supply with a new power supply cord kit, marked for use with a dryer, that is U.L. listed and rated at a minimum of 120 / 240 volts, 30-amperes with three No. 10 copper wire conductors terminated with closed loop terminals, open-end spade lugs with turned up ends, or with tinned leads.

- Do not reuse a power supply cord from an old dryer. The power cord electric supply wiring must be supported at the dryer cabinet by a suitable UL-listed strain relief.
- Grounding through the neutral conductor is prohibited for (1) new branch-circuit installations, (2) mobile homes, (3) recreational vehicles, and (4) areas where local codes prohibit grounding through the neutral conductor. (Use a 4-prong plug for a 4 wire receptacle, NEMA type 14-30R.)

Electric models – Canada Only

- A 120 / 240 volt, 60 Hz AC approved electrical service fused through a 30-ampere fuse or circuit breaker on both sides of the line is required.
- All Canadian models are shipped with the power cord attached. The power cord should be plugged into a 30-ampere receptacle.

NOTE

In Canada, you may not convert a dryer to 208 volts.

DV7500K-03381C-02_EN.indd 18 4/7/2016 5:05:40 PM

Installation

This dryer must be installed by a qualified technician. The installer is responsible for connecting the dryer to the main power while observing the relevant safety regulations of your area.

What's included

Make sure all the parts are included in the product package. If you have a problem with the dryer or the accessories, contact a local Samsung service center or the retailer.

Dryer at a glance

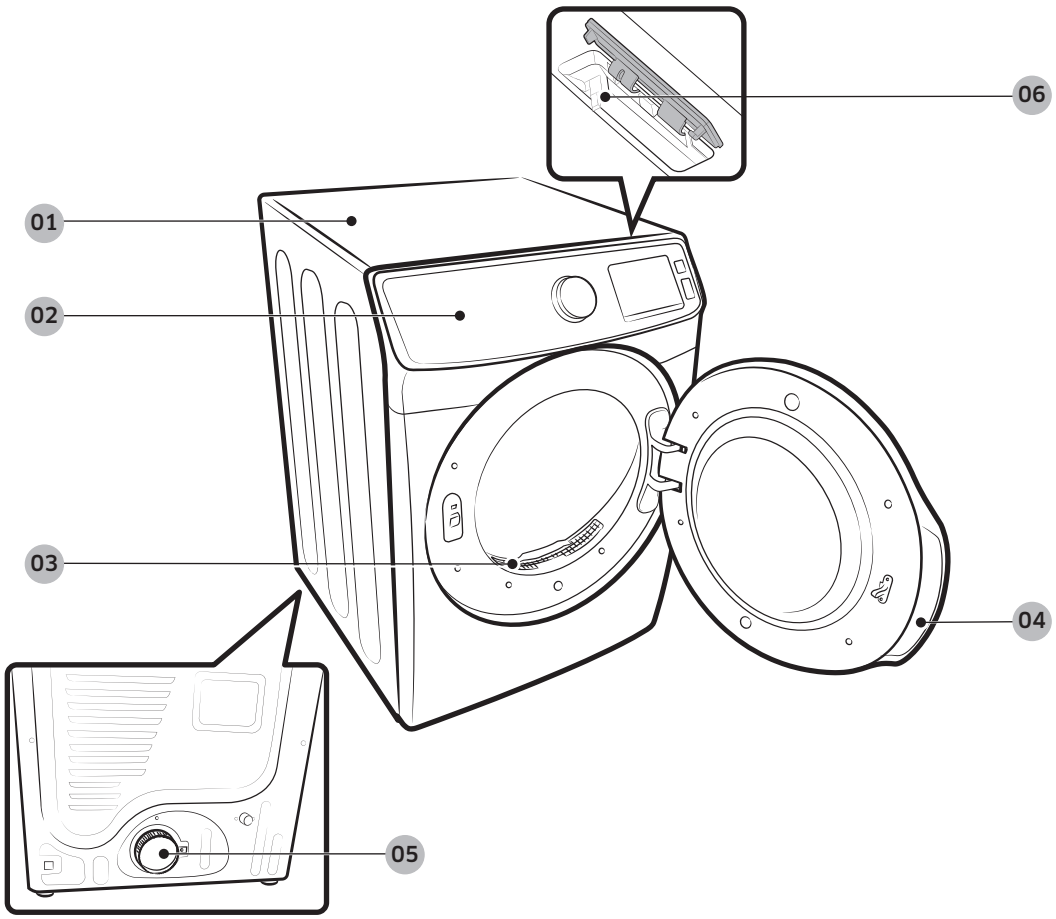

01 Worktop

02 Control panel

03 Filter

04 Door

05 Exhaust duct

06 Smart Home Adapter Port

DV7500K-03381C-02_EN.indd 19 4/7/2016 5:05:40 PM

Installation

Accessories & tools

Provided accessories

Y connector

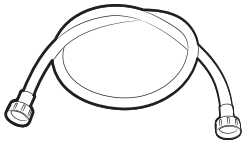

Water hose
(Canadian models only)

Short water hose

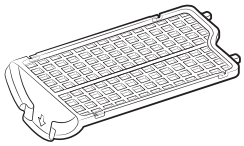

Rack Dry
(DV50K7500E(G)* Only)

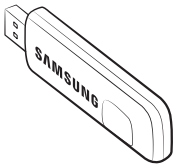

Smart Home Adapter
(sold separately,
HD39J1230GW)

Required tools

Pliers

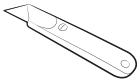

Cutting knife

Pipe wrench
(gas models only)

Nut screwdriver

Level

Philips screwdriver

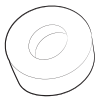

Duct tape

Wrench

WARNING

Packing materials can be dangerous to children. Keep all packing materials (plastic bags, polystyrene, etc.) out of children's reach.

NOTE

The Smart Home Adapter is available for purchase only on the Samsung website (www.samsung.com).

DV7500K-03381C-02_EN.indd 20 4/7/2016 5:05:44 PM

Step-by-step installation

Make sure you have a qualified technician install the dryer. Step by step installation instructions start below.

STEP 1 Install the exhaust system

1. Select a location and move the dryer to the site. For easy access, we recommend you install the dryer in the same location as your washer.
2. To change the door direction, see "Door reversal".
3. Install the exhaust system as instructed in the "Exhaust ducting guide" section.

NOTE

- To move the dryer easily, lay two of the carton cushions from the packaging on the floor. Tip the dryer on its side so it lies across both cushion-tops. Push the dryer so that it is near its final location, and then set the dryer upright.
- Secure room around the dryer to facilitate ducting and wiring.

STEP 2 Connect the gas line

First, read through the "Gas requirements" section, and follow these steps.

1. Remove the protective cap from the gas pipe.
2. Apply a LPG (Liquefied Petroleum Gas)-safe compound or 1.5 wraps of Teflon tape to all threaded connections.
3. Connect the gas supply to the dryer. An additional fitting is required to connect the 3/4" (1.9 cm) female thread end of a flexible connector to the 3/8" (1 cm) male threaded end on the dryer. Tighten up the fitting over all threads.
4. Turn on the gas supply, and check for any leaks using a soap solution. If a leak is found, tighten the connections and try again. DO NOT use an open flame to check for gas leaks.

DV7500K-03381C-02_EN.indd 21 4/7/2016 5:05:44 PM

Installation

STEP 3 Connect the electrical wiring

First, read through the "Electrical requirements" section, and then follow these steps.

3-wire system

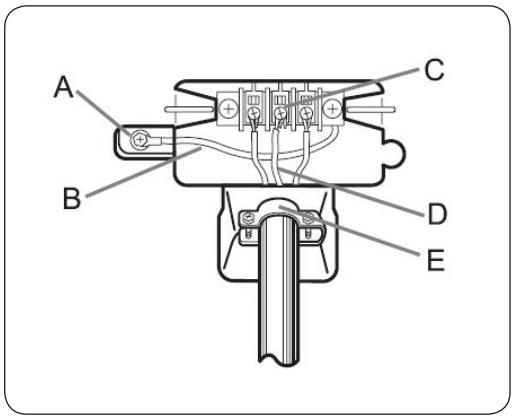

A. External ground connector
B. Neutral grounding wire (white)
C. Center silver-colored terminal block screw
D. Neutral wire (white or center wire)
E. ¾" (1.9 cm) UL-listed strain relief

1. Loosen or remove the center terminal block.
2. Connect the neutral wire (white or center wire) of the power cable to the center, silver-colored terminal screw of the terminal block. Tighten the screws.
3. Connect the other wires to outer terminal block screws. Tighten the screws.
4. Tighten the strain relief screws.
5. Insert the terminal block cover into the rear panel of the dryer. Then, secure the cover with a hold-down screw.

⚠ **CAUTION**

- To convert from the 4-wire system to 3-wire system, connect the ground strap to the terminal block support to ground the dryer frame to the neutral conductor.
- Ring-type terminals are recommended. If using strap terminals, make sure they are tightened.

DV7500K-03381C-02_EN.indd 22 4/7/2016 5:05:44 PM

4-wire system

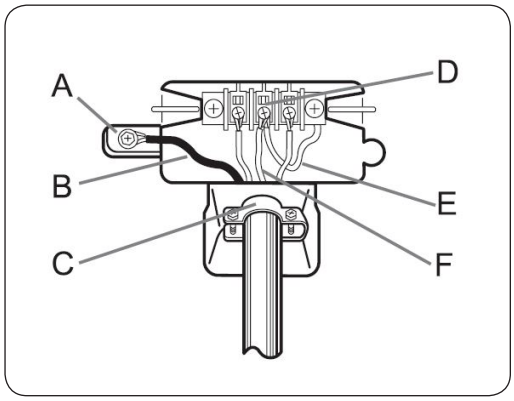

A. External ground connector
B. Green or bare copper wire of power cord
C. ¾” (1.9 cm) UL-listed strain relief
D. Center silver-colored terminal block screw
E. Neutral grounding wire (white)
F. Neutral wire (white or center wire)

1. Remove the external ground connector’s screw, and connect the ground wire (green or unwrapped) of the power cable to the screw.

   ⚠ **CAUTION**

   - To connect the ground wire to the neutral position without through contact A (cabinet ground), contact a technician. This is not user serviceable.
   - Ring-type terminals are recommended. If using strap terminals, make sure they are tightened.
2. Loosen or remove the screws from the center terminal block.
3. Connect the neutral wire (white or center wire) and ground wire (white) to the center screw of the terminal block. Tighten the screw.
4. Connect the other wires to the outer terminal block screws. Tighten the screws.
5. Tighten the strain relief screws.
6. Insert the tab of the terminal block cover into the rear slot of the dryer. Secure the cover with a hold-down screw.

⚠ **WARNING**

- All U.S. models are designed for a 3-wire system connection. The dryer frame is grounded to the neutral conductor at the terminal block. A 4-wire system connection is required for new or remodeled construction, mobile homes, or if local codes do not permit grounding through neutral. If you use the 4-wire system, you cannot ground the dryer frame to the neutral conductor at the terminal block.
- Remove the terminal block cover plate. Insert the power cord with a UL-listed strain relief through the hole provided in the cabinet near the terminal block.

DV7500K-03381C-02_EN.indd 23 4/7/2016 5:05:45 PM

Installation

- A strain relief must be used. Do not loosen the nuts already installed on the terminal block. Be sure they are tight. Use a 3/8” (1 cm) deep well socket.

STEP 4 Connect the water hose (applicable models only)

The dryer must be connected to a cold water tap using the provided water hoses.

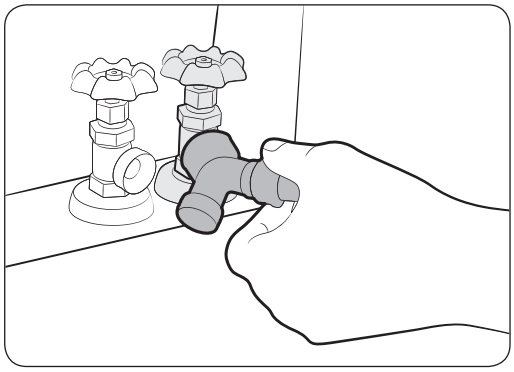

1. Close the cold water tap. If you have a washer cold water hose attached to the cold water faucet, unscrew and remove the hose. Then, connect the female end of the Y connector to the cold water tap.
2. Connect the straight end of the water hose to the Y connector. Tighten the hose coupling by hand.
3. Using pliers, tighten the coupling an additional two-thirds turn. Do not overtighten. You can damage the coupling.

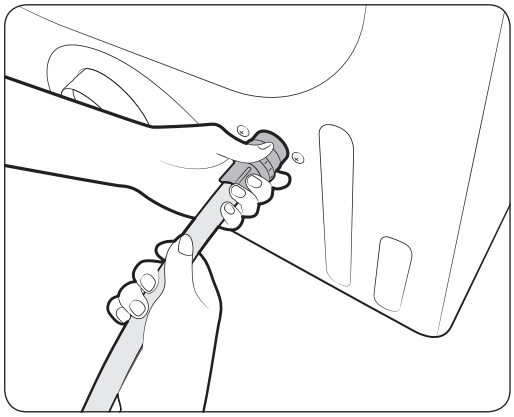

4. Connect the angled end of the water hose to the filling valve at the bottom rear of the dryer. Turn the coupling by hand until it is tight.
5. Using pliers, tighten the coupling an additional two-thirds turn. Do not overtighten. You can damage the coupling.
6. If you detached the cold water hose from your washer, attach the hose to the open end of the Y connector, tighten the coupling by hand until it is tight, and then, using a pliers, tighten an additional two-thirds turn.
7. Open the cold water tap, and then check for any leaks.

If the Y connector cannot be directly connected to the cold water tap, use the short hose as shown on the following page.

DV7500K-03381C-02_EN.indd 24 4/7/2016 5:05:45 PM

Using the short hose as an extension

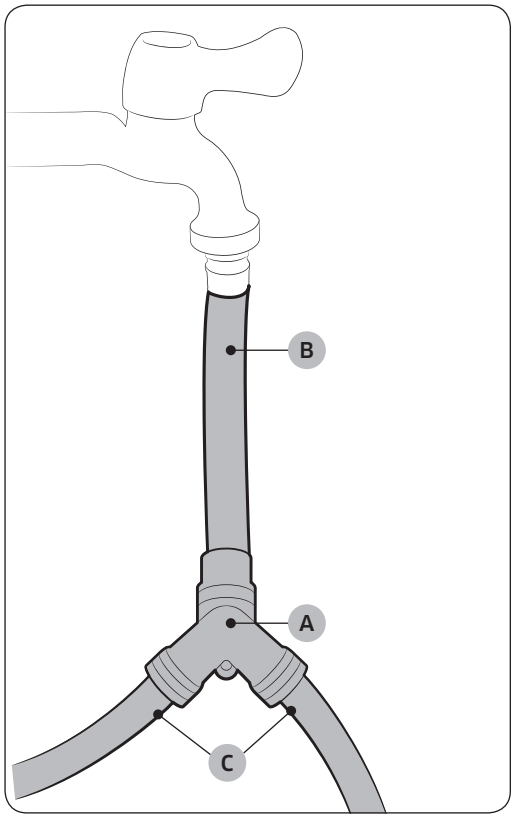

1. Close the cold water tap. If you have a washer cold water hose attached to the cold water faucet, unscrew and remove the hose. Then, connect the **short hose (B)** to the cold water tap. Turn the coupling by hand until it is tight.
2. Using pliers, tighten the coupling an additional two-thirds turn. Do not overtighten. You can damage the coupling.
3. Connect the **Y connector (A)** to the brass male end of the short hose. Turn the coupling by hand until it is tight.
4. Using pliers, tighten the coupling an additional two-thirds turn. Do not overtighten. You can damage the coupling.
5. Connect the angled end of the **water hoses (C)** to the filling valve at the bottom rear of the dryer. Turn the coupling by hand until it is tight.
6. Using pliers, tighten the coupling an additional two-thirds turn. Do not overtighten. You can damage the coupling.
7. If you detached the cold water hose from your washer, attach the hose to the free end of the Y connector, tighten the coupling by hand until it is tight, and then, using a pliers, tighten an additional two-thirds turn.
8. Open the cold water tap, and then check for any leaks.

DV7500K-03381C-02_EN.indd 25 4/7/2016 5:05:46 PM

Installation

STEP 5 Level the dryer

To ensure optimal performance, the dryer must be level.

1. Using a **level (A)**, check if the dryer is level side to side and then front to back. If the dryer is not level, adjust the **leveling feet (B)** at the bottom of the dryer. Then, check if the dryer is level again.

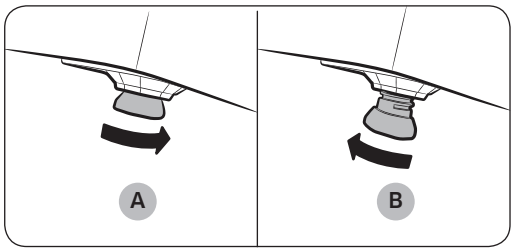

NOTE

- To set the dryer to the same height as your washer, fully **retract (A)** the leveling feet by turning them counterclockwise, then **loosen (B)** the feet by turning them clockwise. Once the dryer is the same height as the washer, follow the directions above to level the dryer.
- Adjust the leveling feet only as much as necessary to level the dryer. Extending the leveling feet more than necessary can cause the dryer to vibrate.

DV7500K-03381C-02_EN.indd 26 4/7/2016 5:05:46 PM

STEP 6 Power on (Gas models)

Make sure all gas connections, the exhaust line, and all wiring is connected correctly. Then, plug the power cord into a power source and check the dryer's installation and operation using the final checklist in Step 7 below.

STEP 7 Final Check

When installation is complete, confirm that:

- The dryer is plugged into an electrical outlet and grounded properly.
- The exhaust ductwork is connected and the joints are taped.
- You have used rigid or stiff-walled flexible metal duct material, not plastic flexible duct.
- The dryer is level and is sitting firmly on the floor.
- The dryer starts, runs, heats, and shuts off properly.

For gas models:

- Gas is supplied properly with no leaks.

⚠ **CAUTION**

The burner may not ignite initially due to air in the gas line. Allowing your dryer to operate on a heat setting will purge the line. If the gas does not ignite within 5 minutes, turn your dryer off and wait 5 minutes. Be sure the gas supply to your dryer has been turned on. To confirm gas ignition, check the exhaust for heat.

DV7500K-03381C-02_EN.indd 27 4/7/2016 5:05:46 PM

Installation

STEP 8 Wi-Fi connection using the Smart Home Adapter

You can control the dryer remotely using the Smart Home Adapter (sold separately), your home network, an Android or iOS smart phone, and the Samsung Smart Home app. To purchase the Smart Home Adapter, visit www.samsung.com and go to the DV50K7500 product page or search for Smart Home Adapter.

For more information about connecting the dryer to your home Wi-Fi network with the Smart Home Adapter, see the Samsung Smart Home section of this manual.

⚠ **CAUTION**

- There are two types of Samsung Smart Home Adapters, one that is used with Samsung Smart TVs and one that is used with Samsung home appliances.
- For your dryer, you must purchase the Adapter that is restricted to HD39J1230GW models (home appliances). Use of any other adapter can cause system failure.

To install the Samsung Smart Home Adapter, follow these steps:

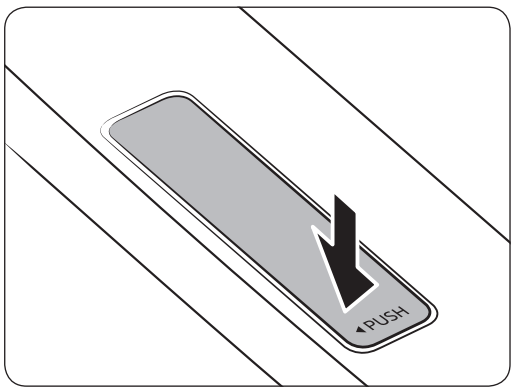

1. To unlock the adapter cover, press to the left of the word PUSH as shown in the illustration.

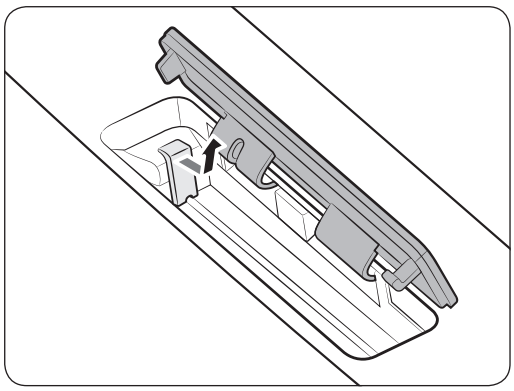

2. Open the adapter cover to reveal the protective cap of the adapter. Gently pull the cap to the right and lift up to remove.

   ⚠ **CAUTION**

   To prevent accidents, keep the protective cap out of children's reach, and away from pets.

DV7500K-03381C-02_EN.indd 28 4/7/2016 5:05:46 PM

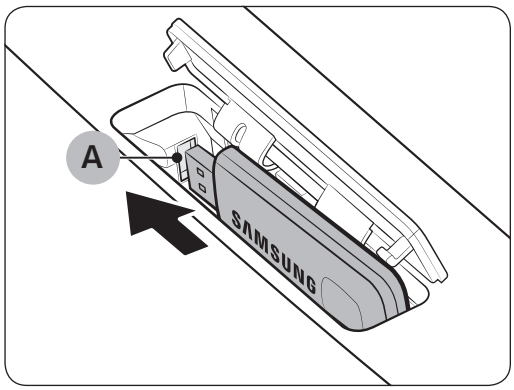

3. Insert the Smart Home Adapter into the **Adapter port (A)** in the correct direction.
   Make sure the Samsung logo faces forward.

   ⚠ **CAUTION**

   Do not insert other USB devices such as USB memory sticks or USB power cables into the port. Incorrect use of the port may damage the Samsung Smart Home Adapter, causing system failure.

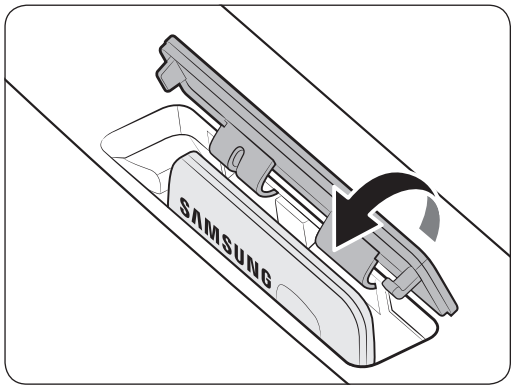

4. Insert the upper area of the adapter cover first, and then press to lock as shown.

⚠ **CAUTION**

- To prevent device damage or system failure, moisture away from the adapter cover. If the adapter cover gets wet or stained, use a soft cloth or sponge wipe up the moisture or wipe away the stain, and then dry well.
- In a poor signal reception area such as basements, you must install an additional AP for normal connection.

DV7500K-03381C-02_EN.indd 29 4/7/2016 5:05:47 PM

Installation

Network connection (applicable models only)

You can use the optional Smart Home Adapter (sold separately) to control and monitor your dryer through the Samsung Smart Home app. For more information about Samsung Smart Home, see the Samsung Smart Home section in this manual.

NOTE

- Recommended encryption systems include WPA/TKIP and WPA2/AES. Any newer or non-standard Wi-Fi authentication protocols are not supported.
- Wireless networks may be affected by the surrounding wireless communication environment.
- If your Internet service provider has registered the MAC address of your PC or modem for identification, your Samsung Smart dryer may fail to connect to the Internet. If this happens, contact your Internet service provider for technical assistance.
- The firewall settings of your network system may prevent your Samsung Smart dryer from accessing the Internet. Contact your Internet service provider for technical assistance. If this symptom continues, contact a local Samsung service center or retailer.
- To configure the wireless access point (AP) settings, see the user manual of the AP.
- Samsung Smart dryers featuring the Samsung Smart Home Adapter support both Wi-Fi 2.4 GHz with IEEE 802.11 b/g/n and Soft-AP protocols. (IEEE 802.11 n is recommended.)
- Unauthorized Wi-Fi wireless routers may fail to connect to applicable Samsung Smart dryers.

DV7500K-03381C-02_EN.indd 30 4/7/2016 5:05:47 PM

Vent blockage test

After the dryer is installed, start the Vent Blockage Test to check if the duct system is properly installed. The Vent Blockage Test automatically detects the status of the ducts and reports any blockage or problems. Proper ducting can reduce drying time and save energy.

NOTE

The Vent Blockage Test must run with the dryer in a cool state. If the dryer warms up after the installation check, run the AIR FLUFF cycle for several minutes to reduce its internal temperature.

Running the vent blockage test

1. Make sure the drum is empty, and then close the door.
   (If there are any clothes or other items in the drum, the test will not give accurate results.)
2. Press the POWER button to turn the dryer on, then simultaneously press and hold the Adjust Time ∧ and Dry level buttons for 3 seconds. “InS” appears in the dryer’s display. (If you have started other procedures before the Vent Blockage Test, the dryer will not enter the Vent Blockage Test mode.)
3. Press the START/PAUSE button. The Vent Blockage Test starts immediately. During the test, the number indicator makes a circle in 6 clockwise steps. The test takes about 2 minutes. Do not open the door during the test.
4. After 2 minutes, when the test is complete, the results is displayed and the dryer sounds a tone.
   If status of the duct system is normal, “0” appears and the dryer sounds a completion tone.
   If the duct system can not exhaust properly, “CLg” appears and the dryer sounds an alarm tone.
   If there are any other problems, an information code appears in the display. For information about the code, see Information codes section on page 61.
   - To stop or cancel the Vent Blockage Test, press the POWER button to turn off your dryer.
   - During the test, if “dc” appears in the display, make sure the door is closed. If “C1” is displayed, see if there is laundry inside drum. If there is, stop the test and remove it. Then, start the test again.
   - The results remain on the display for about 5 minutes and then automatically turn off. You can turn the result off immediately by pressing the POWER button.

DV7500K-03381C-02_EN.indd 31 4/7/2016 5:05:47 PM

Installation

NOTE

- During or after the test, the internal drum is hot. Use caution to prevent burns.
  The Vent Blockage Test is used to check for problems to the current duct system when the dryer is installed for the first time.
- If the test result displays “CLg” (the duct system is blocked), refer to the “Ducting requirements” section on page 14 and the “Exhaust ducting guide” section below, and then take proper measures to correct any problems.
  If the test is suspended, it could result in incorrect results. Follow the proper procedures when testing the dryer.
- Even if the test result is normal (“0”), the duct system could be blocked slightly.
  Properly install all duct work according to the installation instructions in this manual.

Exhaust ducting guide

Ducting

1. Make sure the dryer is installed properly so the air exhausts freely.
2. Use 4-inch rigid metal ducts. Tape all joints including the dryer connection.
   Never use lint-trapping screws.
3. To facilitate the exhaust, keep the ducts as straight as possible.

Cleaning

Clean all old ducts before installing the dryer, and make sure the vent flap opens and closes freely. We recommend that you clean the exhaust system annually or on a regular basis.

WARNING

- To prevent fire, do not use plastic, thin-foil, or non-metal flexible ducts of any kind.
- Do not use a poor exhaust system because it slows down the dryer’s performance.
- Do not use excessively long ducts that have multiple elbows.
- Do not use crushed or clogged venting or ducts.

DV7500K-03381C-02_EN.indd 32 4/7/2016 5:05:47 PM

Door reversal

Type 1

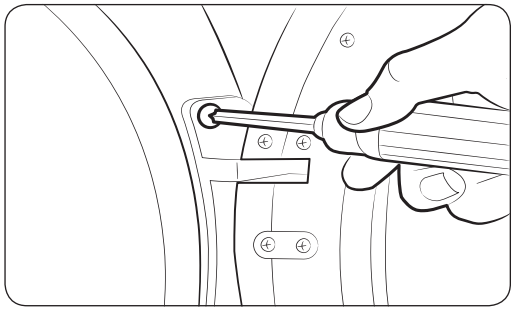

1. Unplug the power cord.
2. Remove two door hinge screws.
3. Lift the door and remove it.

NOTE

There is a screw on the back side of the hinge that will support the door as you unscrew the hinge screws.

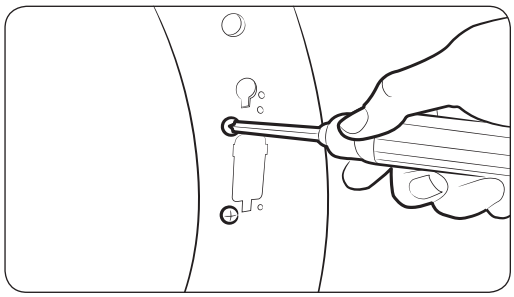

4. Remove the two screws that are above and below the cut-out in the frame front.

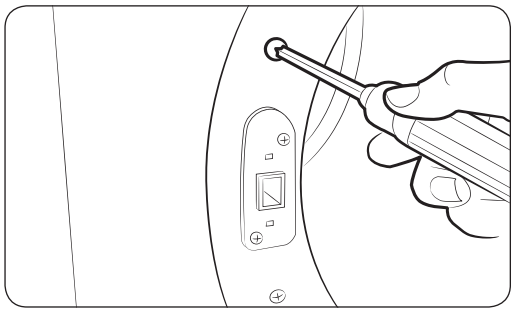

5. Remove the two screws above and below the lever holder on the opposite side of the door opening.

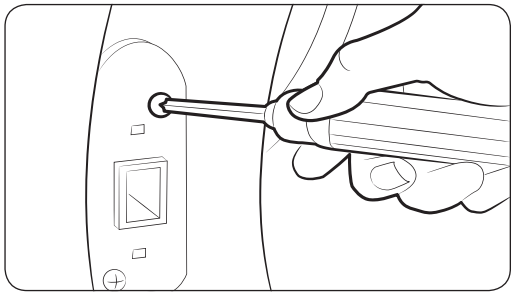

6. Remove the two screws that hold the lever holder in place, and then remove the lever holder.

DV7500K-03381C-02_EN.indd 33 4/7/2016 5:05:47 PM

Installation

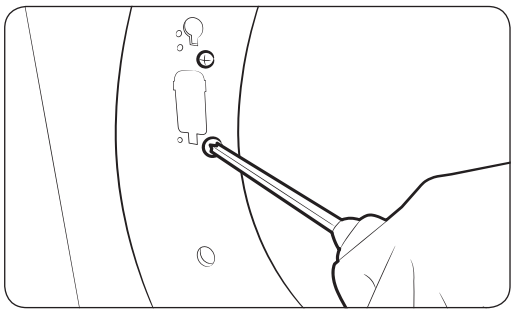

7. Re-insert the two screws that held the lever holder into the same screw holes, and then tighten.

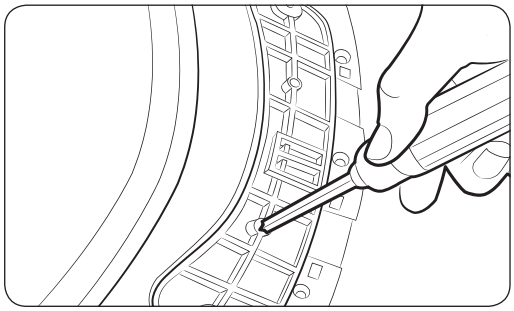

8. Remove the single screw from the back of the door hinge.

NOTE

This is the screw that supports the door against the frame so you can unscrew or screw in the hinge without needing to support the door yourself.

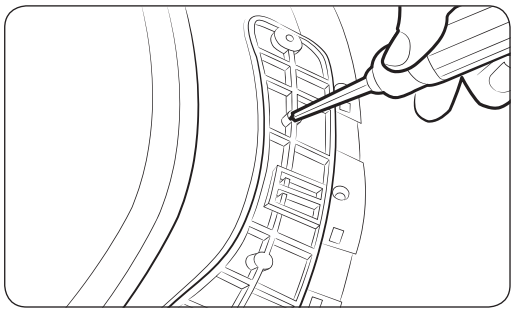

9. Insert the screw you just removed into the other screw hole on the back of the door hinge, and then tighten.

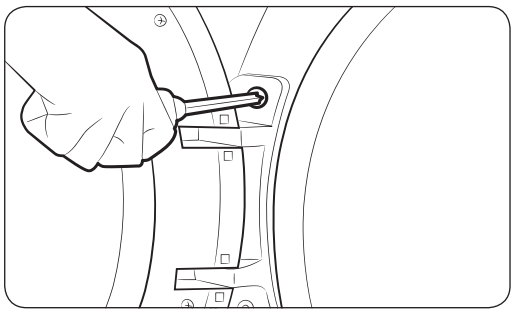

10. Place the door on the other side, and then reattach it to the dryer.

NOTE

Insert the head of the screw on the back of the hinge into the hole above the cut out in the frame, and then slide the door hinge down until it stops. Make sure the protrusion on the back of the hinge is pressed into the cut out before you tighten the hinge screws.

DV7500K-03381C-02_EN.indd 34 4/7/2016 5:05:47 PM

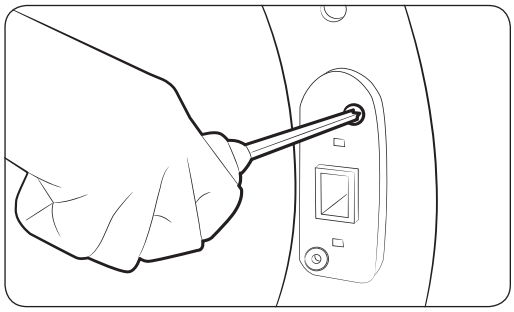

11. Push the lever holder into the cut out on the other side of the door opening. Insert screws, and then tighten as shown.

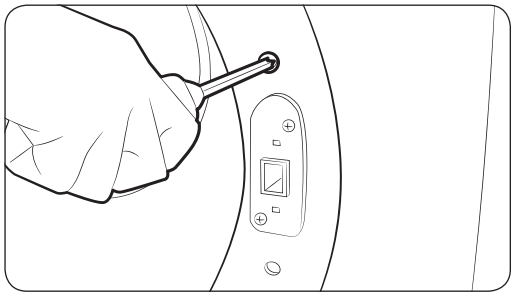

12. Re-attach the remaining screws to the remaining holes above and below the lever holder, and then tighten.

DV7500K-03381C-02_EN.indd 35 4/7/2016 5:05:48 PM

Before you start

Here are a few things you should know before starting your dryer.

Sort and load

- Put one wash load in the dryer at a time.
- Do not mix heavy and lightweight items together.
- To improve drying efficiency for one or two items, add a dry towel to the load.
- For best results, untangle items before inserting them into the dryer.
- Overloading reduces the tumbling action, resulting in uneven drying and wrinkling.
- Unless recommended on the care label, do not dry woolens or fiberglass items.
- Avoid drying unwashed items.
- Do not dry items soiled with oil, alcohol, gasoline, etc.

Functional prerequisite

Lint filter

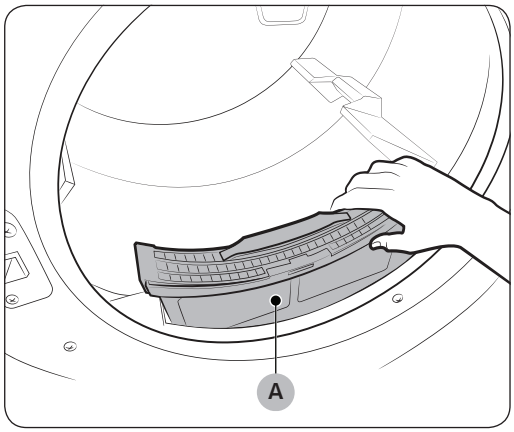

To prevent a risk of fire, make sure to clean the lint filter before or after every load.

1. Turn off the dryer.
2. Open the door, and pull out the **lint filter (A)** from inside the tumbler.
3. Open the lint filter by separating it at the top. Remove the lint that has accumulated, and then clean the lint filter.
4. Close the lint filter, reinsert the lint filter into the dryer, and then close the dryer door.

⚠ **CAUTION**

- Do not operate the dryer without the lint filter in place.
- Do not use a damaged or broken lint filter. This may reduce performance and/or cause fire.

DV7500K-03381C-02_EN.indd 36 4/7/2016 5:05:48 PM

Rack Dry (applicable models only)

Some models come with a drying rack which is inserted into the drum at the factory.

If your model came with a drying rack, remove the rack from the drum before you use the dryer for the first time. To remove the rack, pull the rack straight up, and then take it out of the drum. Remove the drying rack from its packaging and store the rack for later use.

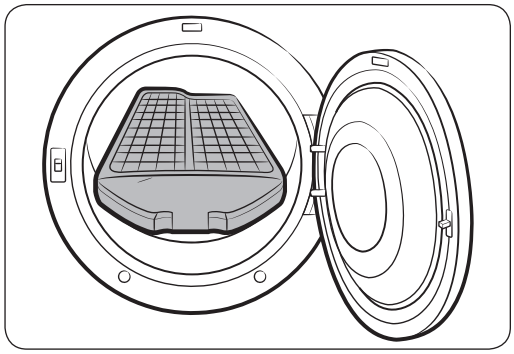

If a drying rack is not provided, you can purchase it at a local Samsung service center. (Part Code : DC61-02705A)

To use the drying rack, follow these steps:

1. Insert the **drying rack (A)** inside the tumbler with the filter handle to the front.
2. Insert the rear legs of the drying rack into the recessed areas of the rear wall, and then press down the middle of the drying rack to secure it in place.
3. Put items to dry on the rack. Make sure to leave space between the items for air flow.
4. Press **Rack Dry**, and then select the drying time.
5. When the items are dry, remove the them from the dryer, and then remove the drying rack.

DV7500K-03381C-02_EN.indd 37 4/7/2016 5:05:48 PM

Before you start

Drying rack drying suggestions

Item	Cycle settings
Washable sweaters (block to shape and lay flat on rack)	TIME DRY with the Extra Low temperature setting
Stuffed toys (cotton or polyester fiber-filled)	
Stuffed toys (foam or rubber-filled)	AIR FLUFF
Foam rubber pillows	
Sneakers	

⚠ **WARNING**

- Make sure to unpack the drying rack before using it. Otherwise, the dryer can be damaged or its performance diminished.
- Drying foam rubber, plastic, or rubber on a heat setting may damage the items and create a fire hazard.

DV7500K-03381C-02_EN.indd 38 4/7/2016 5:05:48 PM

Operations

⚠ **WARNING**

To reduce the risk of fire, electric shock, or injury, read the “**Safety information**“ before operating this appliance.

Feature panel

Electric models

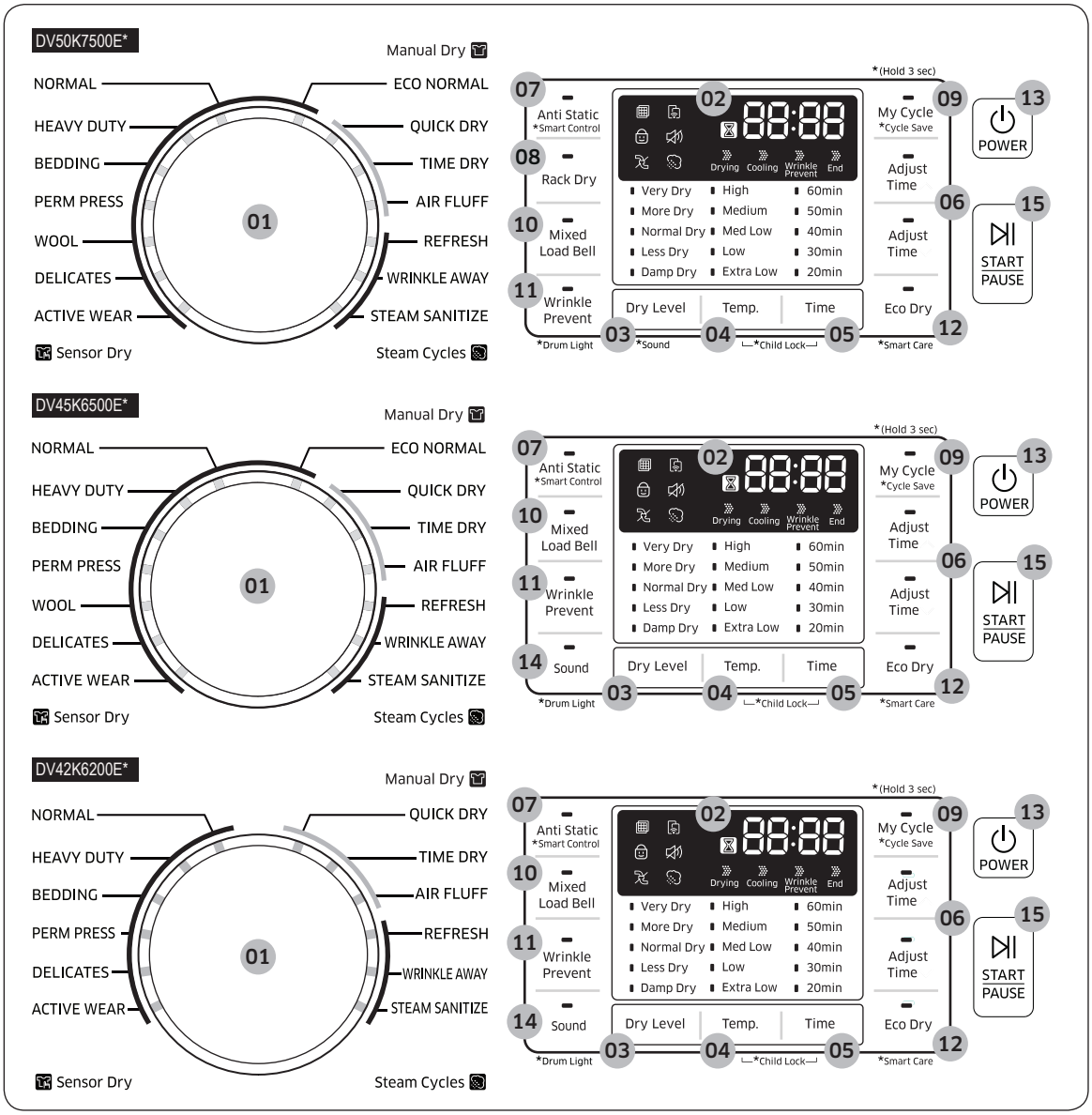

DV7500K-03381C-02_EN.indd 39 4/7/2016 5:05:48 PM

Operations

Gas models

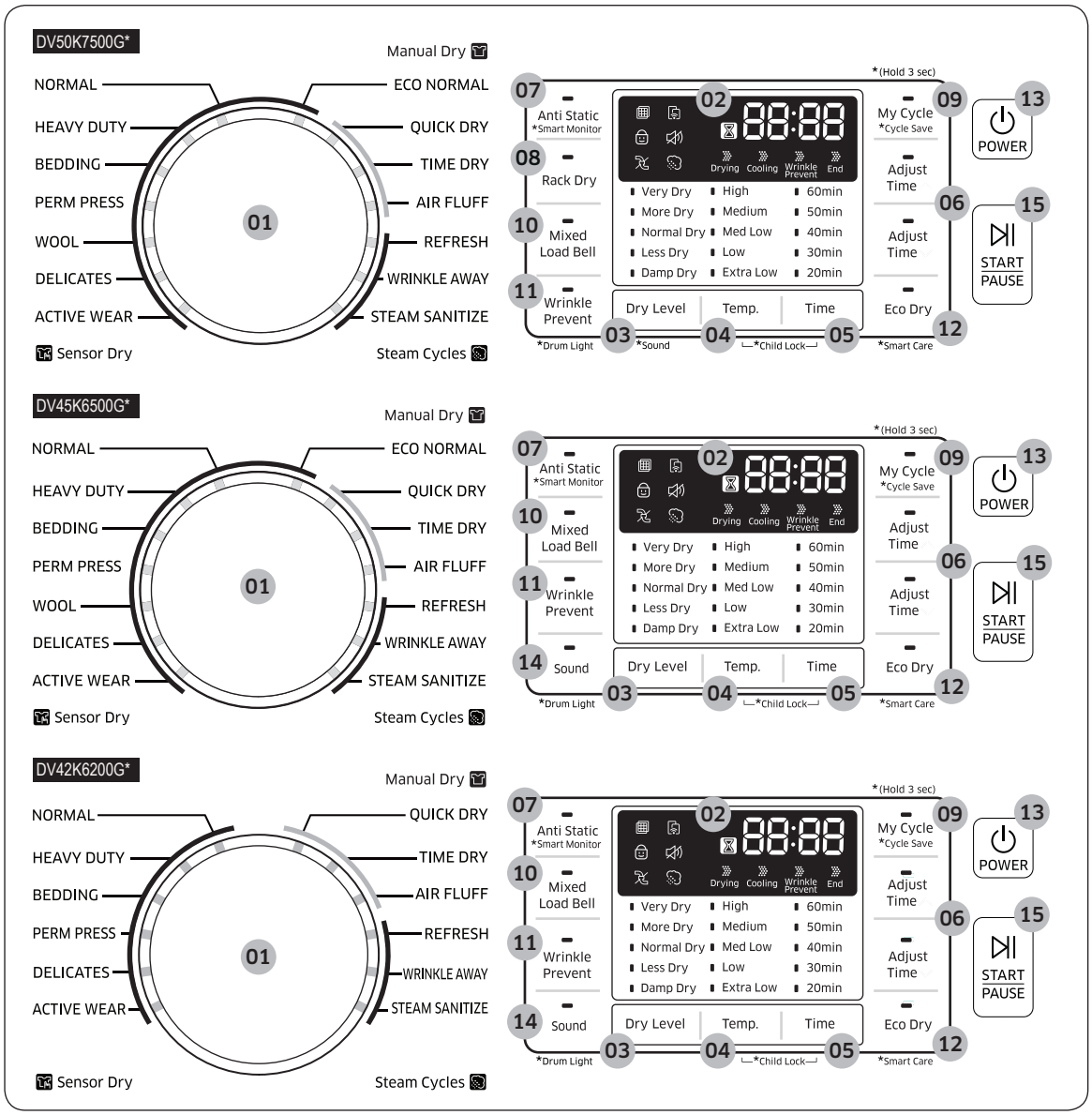

DV7500K-03381C-02_EN.indd 40 4/7/2016 5:05:49 PM

01 Cycle Selector	Turn the Cycle Selector to select the desired cycle. The indicator by the cycle name lights up. • Sensor Dry cycles: The dryer senses the internal humidity and uses it to determine the drying time. • Manual Dry cycles: The drying time is fixed. • Steam cycles: The dryer sprays water into the drum to deodorize clothes and reduce static electricity and wrinkles.
02 Digital Graphic Display	Displays all cycle information, including the cycle time, information code, and operating status. • Filter Check • Child Lock • Steam • Vent Sensor • Smart Control (Smart Monitor) • Sound
03 Dry Level	The **Dry Level** button serves two purposes. **Use 1**: Press **Dry Level** to select a dry level. This is available only with the Sensor Dry cycles. • Larger or bulkier loads may require Very Dry or More Dry for complete dryness. • Less Dry is best suited for lightweight fabrics or for leaving some moisture in the clothing at the end of the cycle. • Damp Dry is designed to partially dry items. Use for items that lay flat or hang to dry. **NOTE** This option is not available with: WOOL, ACTIVE WEAR, and STEAM SANITIZE. **Use 2 (DV50K7500E(G)*)**: Press and hold **Dry Level** for 3 seconds to turn off the dryer's notification beeps and melodies. To unmute the dryer, press and hold again for 3 seconds. **NOTE** The mute function remains active even after you restart the dryer.

DV7500K-03381C-02_EN.indd 41 4/7/2016 5:05:50 PM

Operations

04 Temp.	Press **Temp.** to change the temperature of the current cycle. • High: For sturdy cottons or those labeled Tumble Dry. • Medium: For permanent press, synthetics, lightweight cottons, or items labeled Tumble Dry Medium. • Med Low: For heat lower than Medium. Use to dry synthetic or washable knit fabrics. • Low: For heat sensitive items labeled Tumble Dry Low or Tumble Dry Warm. • Extra Low: Provides the lowest heated drying temperature possible.
05 Time	Press **Time** to select a drying time for the selected cycle. This is available only with TIME DRY, QUICK DRY, AIR FLUFF, and WRINKLE AWAY. This button is not available for Sensor Dry cycles because exact drying times are determined by fluctuating humidity levels.
06 Adjust Time	You can change the set time for the selected cycle. This is available only with TIME DRY, QUICK DRY, AIR FLUFF, and WRINKLE AWAY. To change the cycle time, press **Adjust Time** ∧ or **Adjust Time** ∨ until the desired time is displayed.
07 Anti Static (*Smart Cotrol, *Smart Monitor)	Anti Static reduces static electricity that occurs from clothing friction. This is done by spraying steam into the drum in a later stage of the drying cycle. Remote control After you have inserted the Smart Home Adapter and connected the dryer to your home network using the Samsung Smart Home app, you can control the dryer remotely. To begin, press and hold **Smart Control (Smart Monitor)** for 3 seconds. The Smart Control (Smart Monitor) indicator blinks. The dryer enters the waiting for remote commands mode For more information, visit the Samsung Smart Home website. **NOTE** The Anti Static function is only available with NORMAL, HEAVY DUTY, PERM PRESS, DELICATES, and TIME DRY.
08 Rack Dry (DV50K7500*)	Rack Dry is available in the TIME DRY cycle. Temperature will be set to Extra Low only. See “**Rack Dry (applicable models only)**” on page **37** for details.

DV7500K-03381C-02_EN.indd 42 4/7/2016 5:05:50 PM

09 My Cycle	Choose your favorite cycle including the cycle time, temperature, and dry level. See "**My Cycle**" for details.
10 Mixed Load Bell	The Mixed Load Bell notifies you when the average dry level in a load is damp dry (80 % dried). This lets you take items that you don't want fully dried or that dry quickly out of the dryer early while letting others continue to dry. You can select this option in all Sensor Dry cycle except for WOOL, ACTIVE WEAR, and STEAM SANITIZE. Available dry levels are Normal Dry, More Dry, and Very Dry.
11 Wrinkle Prevent	The **Wrinkle Prevent** button serves two purposes. **Use 1**: Wrinkle Prevent provides approximately 180 minutes of intermittent tumbling in unheated air at the end of the cycle to reduce wrinkling. Press **Wrinkle Prevent** to activate this feature. The load is dry and can be removed at any time during the Wrinkle Prevent cycle. **Use 2 (DV50K7500E(G)*)**: Press and hold Wrinkle Prevent for 3 seconds to turn on the drum light while the dryer is running. To turn off the drum light, press and hold again for 3 seconds. **NOTE** After 2 minutes of inactivity, the drum light automatically turns off.
12 Eco Dry	This function is available with **Normal** and **Time Dry**. With the Eco Dry activated, drying takes a longer time but power consumption is reduced. The drying time can be extended by up to 3 times normal depending on the temperature and load. The Eco Dry function is enabled by default.
13 POWER	Press to turn on/turn off the dryer.
14 Sound (DV45K6200E(G)*, DV45K6500E(G)*)	**Use 1**: Press **Sound** to turn on or off the dryer's notification beeps and melodies. **Use 2**: Press and hold **Sound** for 3 seconds to turn on the drum light while the dryer is running. To turn off the drum light, press and hold again for 3 seconds. **NOTE** This function remains active even after you restart the dryer.
15 START/PAUSE	Press and hold to start operation or press to stop operation.

DV7500K-03381C-02_EN.indd 43 4/7/2016 5:05:50 PM

Operations

NOTE

Extremely tangled items finished by the washer may degrade the drying efficiency or cause the door to open. We recommend that you untangle the items before drying.

Do not put objects on the dryer, especially on the feature panel.

CAUTION

Do not spray water onto the feature panel. This may cause a system failure.

Simple steps to start

1. Press POWER to turn on the dryer.
2. Turn the Cycle Selector to select a cycle.
3. Change the cycle settings (Dry Level, Temp. and Time) as necessary.
4. Optionally, you can activate options available by pressing the relevant button (Anti Static, Drum Light, Mixed Load Bell, Wrinkle Prevent, and/or Eco Dry).
5. Press and hold START/PAUSE. The dryer indicator turns on with an estimated cycle time on the display.

To change the cycle during operation

1. Press START/PAUSE to stop operation.
2. Select a different cycle.
3. Press and hold START/PAUSE to start new cycle.

DV7500K-03381C-02_EN.indd 44 4/7/2016 5:05:50 PM

Cycle overview

Cycle	Description
ECO NORMAL (DV45K6500E(G)*, DV50K7500E(G)*)	For reducing energy usage. This cycle adjusts the cycle time and temperature for increased efficiency.
NORMAL	For most fabrics including cottons and linens. If Normal is selected, the Eco Dry function is enabled by default. For more information, see Eco Dry in the "Feature panel" section.
HEAVY DUTY	For drying items made out of heavy fabrics, such as jeans, corduroys, or work clothes, with high temperature heat.
BEDDING	For bulky items such as blankets, sheets, and comforters.
PERM PRESS	Dry wrinkle-free cottons, synthetic fabrics, knits, and permanent press fabrics automatically.
WOOL (DV45K6500E(G)*, DV50K7500E(G)*)	For machine washable and tumble dryable wool only.
DELICATES	For heat-sensitive items at a low drying temperature.
ACTIVE WEAR	For exercise wear and outdoor wear such as sports jerseys, training pants, water-repellent jackets, and other performance clothing. Thick fabrics like a zipper or velcro closure of a jacket, or training socks may not be completely dried.
QUICK DRY	A quick drying cycle that runs for 30 minutes
TIME DRY	You can specify a cycle time in minutes. If Time Dry is selected, the Eco Dry function is enabled by default. For more information, see Eco Dry in the "Feature panel" section.
AIR FLUFF	Tumbles the load in room temperature air.
REFRESH	Use to smooth out wrinkles and reduce odors in loads of one to four items. With this cycle selected, a small amount of water is sprayed into the dryer drum after several minutes of tumbling with heat. Before removing the laundry, confirm that the laundry load is dry.
WRINKLE AWAY	For best results, load 2-3 items at once. You can extend the drying time by a minimum of 20 minutes, depending on the item type or load. Before removing the laundry, confirm that the laundry load is dry.

DV7500K-03381C-02_EN.indd 45 4/7/2016 5:05:50 PM

Cycle	Description
STEAM SANITIZE	Use to sanitize items by applying steam and high-temperature heat to the fabric. This cycle can make items soft and reduce smells. Confirm that the laundry load is wet or partially before starting this cycle.

Drying guide

The best way to dry items is to follow the instructions on the care label. If no drying instructions are provided, see the following table for reference.

Cycle	Description
Bedspreads & Comforters	Follow the care label instructions or dry using Bedding. • Make sure the item is thoroughly dry before using or storing. • May require repositioning in the drum to ensure even drying.
Blankets	Use Normal and dry only one blanket at a time for best tumbling action. • Make sure blankets are is thoroughly dry before using or storing.
Curtains & Draperies	Use Perm Press and the Medium temperature setting to help minimize wrinkling. • Dry curtains and draperies in small loads for best results and remove as soon as possible after the cycle is complete.
Cloth Diapers	Use Normal and the Medium temperature setting for soft, fluffy diapers.
Down-filled Items (jackets, sleeping bags, comforters, etc.)	Use Normal and the Medium temperature setting. • Add a couple of dry towels to absorb moisture and shorten drying time.
Foam Rubber (rug backs, stuffed toys, shoulder pads, etc.)	Do not dry on a heat setting. Use AIR FLUFF. ⚠ **WARNING** Drying a rubber item with heat may damage it or cause a fire.
Pillows	Use Normal. • Add a couple of dry towels and a pair of clean sneakers to help the tumbling action and to fluff the pillows. • Do not dry kapok or foam pillows using a heated drying cycle. You can dry these items in the dryer only if you use AIR FLUFF.

DV7500K-03381C-02_EN.indd 46 4/7/2016 5:05:50 PM

Cycle	Description
Plastics (shower curtains, outdoor furniture covers, etc.)	Use AIR FLUFF or TIME DRY and the Low or Extra Low temperature settings depending on the care label instructions.

⚠ **WARNING**

Do not dry:

- Fiberglass items (curtains, draperies, etc.)
- Woolens, unless recommended on the label
- Items spotted or soaked with vegetable or cooking oils

DV7500K-03381C-02_EN.indd 47 4/7/2016 5:05:50 PM

Operations

Special features

Child Lock

Child Lock prevents children from playing with the dryer. When Child Lock is activated, all buttons except for the **POWER** button are disabled.

To activate/deactivate Child Lock, simultaneously press and hold **Temp.** and **Time** for 3 seconds.

NOTE

Once Child Lock is activated, it will remain active even after you restart the dryer. If other buttons, except for the **POWER** button, do not respond, check the Child Lock indicator. If the indicator is on, follow the instructions above to turn Child Lock off.

Smart Care

If the dryer displays an information code, you can use Smart Care to check the status of the dryer on a smartphone. To use Smart Care, you must have the Samsung Smart Care app installed on your smartphone.

NOTE

Smart Care is optimized for Samsung Galaxy and Apple iPhones. (Not compatible with some models).

Download the Samsung Smart Care app from the Google Play Store or Apple App store (Search term: "**Samsung Smart Washer/Dryer**"), and install it on your smartphone.

If an information code appears on the dryer, follow these steps:

1. Press and hold **Eco Dry** for 3 seconds to activate Smart Care. The Smart Care indicator turns on.
2. Open the Smart Care app on your smartphone.
3. Put the smartphone's camera close to the display of the dryer. The app automatically recognizes the information code, and displays suggestions on your smartphone.
4. If the smartphone fails to recognize the information code more than twice, type the information code manually into the Smart Care app.

CAUTION

- If light is reflected on the display of the dryer, the smartphone may not recognize the information code.
- If you hold the smartphone at an angle to the dryer's display, the smartphone may not recognize the information code. For best results, hold the smartphone so that the front of the panel and the smartphone are parallel or nearly parallel.
- After you use this function, the dryer will delete the record of the information code from its code log.

DV7500K-03381C-02_EN.indd 48 4/7/2016 5:05:50 PM

Sound On/Off

To turn off the dryer's notification beeps and melodies, press and hold **Dry Level** for 3 seconds (DV50K7500*) or press Sound (DV45K6500*, 6200*).

To unmute the dryer, press and hold **Dry Level** again for 3 seconds(DV50K7500*) or press Sound (DV45K6500*, 6200*)

NOTE

This function remains active even after you restart the dryer.

My Cycle

You can create your own cycle that contains your preferred settings, and use it at your convenience.

1. Turn the **Cycle Selector** to select a cycle. The cycle indicator turns on.
2. Set or change the settings (**Dry Level**, **Temp.**, **Time**, etc) and/or options as necessary. Each corresponding indicator blinks.
3. Press and hold **My Cycle** for 3 seconds. The dryer stores the selected cycle with its settings.

To use My Cycle, press **My Cycle**.

NOTE

Wrinkle Prevent is not available with **My Cycle**.

DV7500K-03381C-02_EN.indd 49 4/7/2016 5:05:50 PM

Operations

Samsung Smart Home (applicable models only)

Installation

Visit the Google Play Store, Galaxy Apps, or Apple App Store and search for “Samsung Smart Home”. Download and install the Samsung Smart Home app provided by Samsung Electronics to your smart device.

NOTE

- The Samsung Smart Home app is designed for Android 4.0 (ICS) or higher, or iOS 7.0 or higher, and is optimized for Samsung smartphones (Galaxy S and Galaxy Note series). On other smartphone models, some functions may operate differently.
- For improved performance, the Samsung Smart Home app is subject to change without notice.

Samsung account

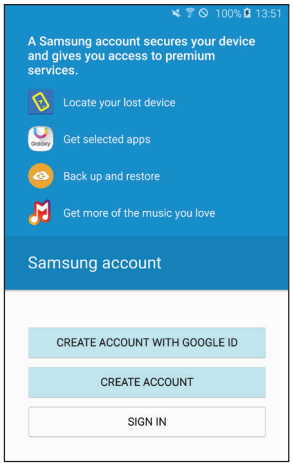

Android

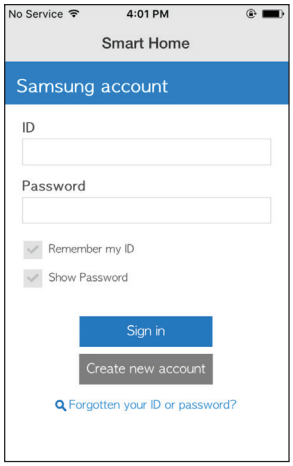

iOS

You are required to register your Samsung account to use the app. If you don’t have a Samsung account, follow the app’s onscreen instructions to create a free Samsung account.

DV7500K-03381C-02_EN.indd 50 4/7/2016 5:05:51 PM

Getting started

1. Insert the Smart Home Adapter into the Smart Home Adapter port of your dryer.
2. Run the Samsung Smart Home app and log in with your Samsung account. iPhone users are required to provide the login information each time they access the app.

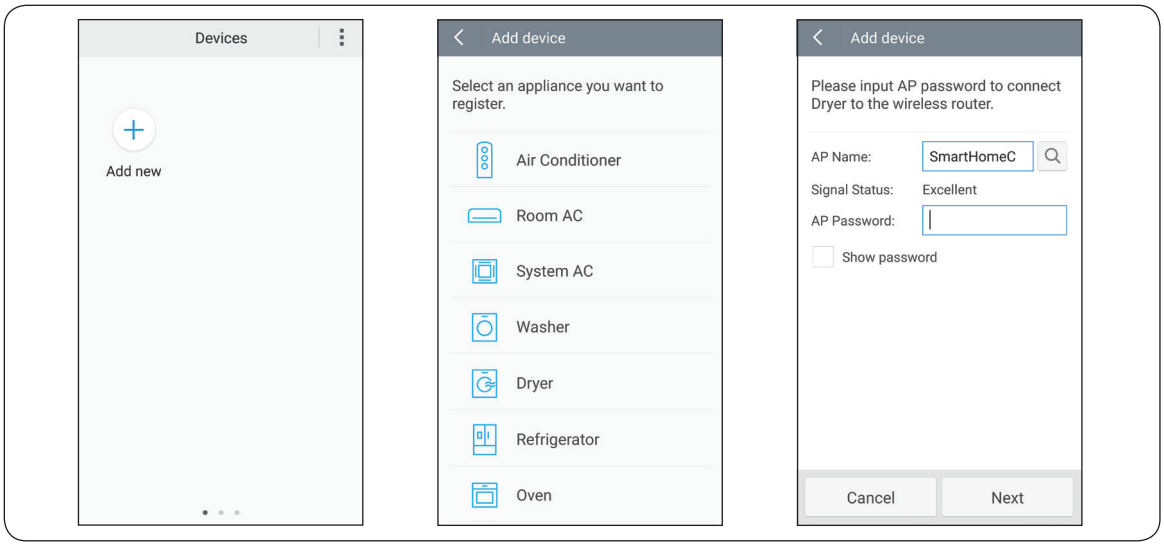

3. Access **Device** > the plus (+) icon, and then tap **Dryer**.
4. Follow the onscreen instructions to provide the necessary information about the router, and then tap **Next**.

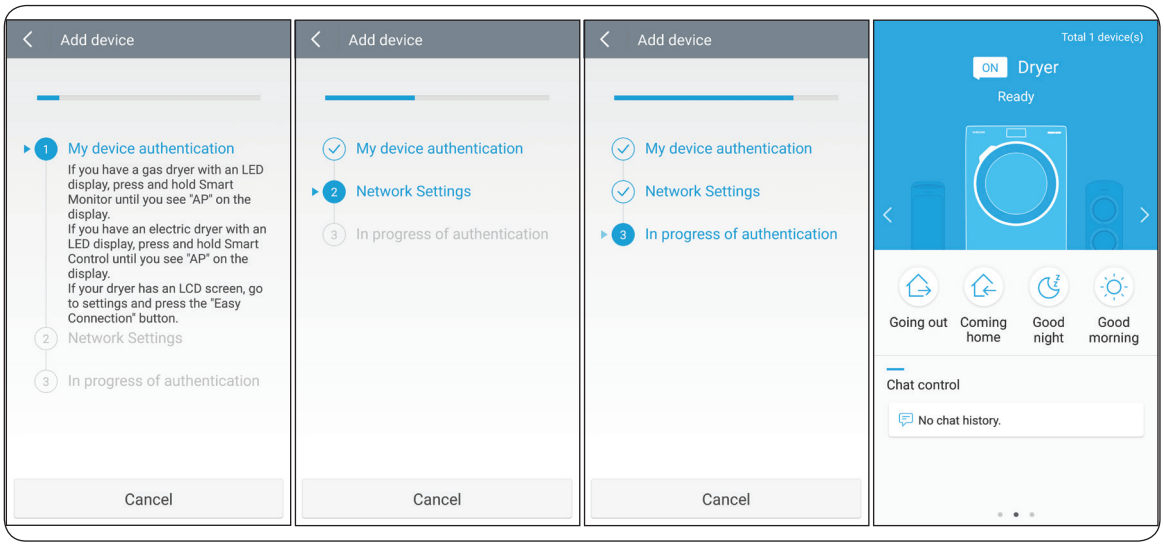

5. Press and hold **Smart Control** (**Smart Monitor**) on the dryer for more than 5 seconds until the "**AP**" message appears on the display. Your dryer is registered with the app.

DV7500K-03381C-02_EN.indd 51 4/7/2016 5:05:53 PM

6. Once your dryer is registered properly, the App will show this message.
   “Congratulations! Your dryer has been added to your Smart Home. Please complete the setup by restarting your dryer.
   You may then remotely control your dryer by turning on Smart Control.
   * The remote control function is only available with electric dryers.”
7. When the device registration is complete, the dryer icon will appear in the Samsung Smart Home app.
8. When “oAP” message disappears on the display, restart your washing machine.
9. Press and hold Smart Control (Smart Monitor) on the washer for more than 3 seconds. The Smart Control (Smart Monitor) indicator will light up on the dryer.

NOTE

Some options or settings of the dryer may not be available for remote control.

For safety reasons, Smart Control will be disabled if the Child Lock is activated. To use Smart Control, make sure you deactivate the Child Lock first.

SAMSUNG SmartHome

This product is a smart dryer that supports the Samsung Smart Home service.

The EZ setup(network setting) takes time depending on your network condition.

For more information, visit www.samsung.com.

DV7500K-03381C-02_EN.indd 52 4/7/2016 5:05:54 PM

Key features

You can register Samsung smart home appliances on the Samsung Smart Home server for remote access.

Menu overview

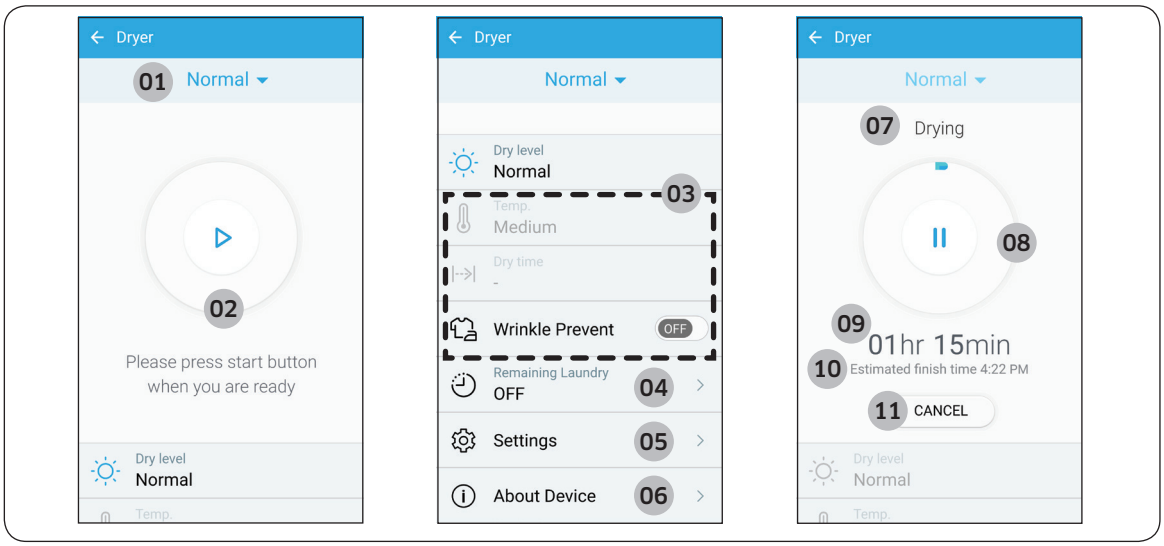

For improved performance, the content and design of the app is subject to change without notice.

01 Current cycle	Tap to select a desired cycle.
02 Start/Pause	With Smart Control (Smart Monitor) enabled on the dryer, you can remotely start an operation or pause an operation temporarily.
03 Options	You can set or adjust options remotely. Option default values and available setting values differ depending on the selected cycle.
04 Remaining Laundry (applicable models only)	If the dryer has laundry remaining in the drum after a cycle has finished, this function can notify you that laundry remains in the drum. To use, tap the Remaining Laundry icon to turn the function on, and then specify a notification interval. The function stays active for up to 12 hours. If you open the door, the function will be terminated and the machine turns off.
05 Settings	The Settings menu differs by model and is not available for all models.

DV7500K-03381C-02_EN.indd 53 4/7/2016 5:05:55 PM

Operations

06 About Device	• Version: Displays the current version of the Dryer app. • Self Check (applicable models only): The dryer runs a self-diagnosis and displays an information code if it finds an issue to check.
07 Current Process	The current process - Washing, Rinsing, etc. - is displayed.
08 Progress	The progress of the selected cycle is displayed in 1 % increments.
09 Remaining Time	The time remaining for the selected cycle is displayed for.
10 Estimated Finish Time	The estimated finish time is displayed.
11 Cancel	Tap to cancel the current cycle and return to the cycle selection screen.

When the cycle is complete:

01 Finished Cycle	Displays the cycle that has completed.
02 Completion Message	When the cycle is complete, the Dryer app displays a completion message.

For gas models, the Dryer app only serves as a monitoring device. You cannot manipulate any of the controls available on the app.

DV7500K-03381C-02_EN.indd 54 4/7/2016 5:05:55 PM

Maintenance

Keep the dryer clean to prevent decreased performance and to lengthen its life.

WARNING

The control board and inlet valve are intentionally not grounded and may present a risk of electric shock only during servicing.

Service personnel - Do not contact these parts while the dryer is energized.

Vent sensor

The dryer features a vent sensor that detects and notifies you when it is time to clean the ductwork. The indicator lets you know the status of the duct.

Level	Indicator	Status	Action
0	Off	The ductwork is not clogged.	
1	On	• The duct or lint filter is clogged. • The pressure applied to the duct is high because the duct is too long or bent.	• Check the lint filter or duct and clean if necessary. • Check the duct connections and shorten or straighten the duct if necessary.
2	Blinking	• The duct or lint filter is severely clogged. • The pressure applied to the duct is very high because the duct is too long or bent.	• Check and clean the lint filter or duct and make sure they are not clogged. • Check the duct connections and shorten or straighten the duct work.

If the dryer is in the Level 2 state, the indicator blinks for 3 hours after the completion of the current cycle. If you press **POWER** or open the door, the dryer powers off immediately.

NOTE

- For duct installation, see "**Exhaust ducting guide**" on page 28 and "**Ducting requirements**" on page **14**.
- The dryer may keep running even if the duct is clogged, but the drying time will be extended.
- If the indicator turns on for the first time and is solid (not blinking), check and clean the lint filter and/or duct.
- If the indicator turns on again later, it is because the duct is installed or connected with some restrictions (it's too long or has too many bends). This is not a system failure. However, drying time may be extended or the drying performance may be degraded.

DV7500K-03381C-02_EN.indd 55 4/7/2016 5:05:55 PM

Maintenance

Cleaning

Feature panel

- Clean with a soft, damp cloth. Do not use abrasive substances.
- Do not spray liquid cleaning agents directly on the display of the dryer.
- Some laundry pre-treatment soil and stain removers may damage the feature panel.
- When using liquid cleaning agents, apply them to the cleaning cloth. Do not apply them directly to the dryer. Wipe up any spills or overspray immediately.

Tumbler

- Remove any stains from the tumbler with an all-purpose cleaner.
- Tumble old towels or rags to remove any remaining stains or cleaning substances. Stains may still be visible, but will not affect subsequent loads.

Stainless steel tumbler

To clean the stainless steel tumbler, use a damp cloth with a mild, non-abrasive cleaner suitable for easily marred surfaces. Remove cleaner residue and dry with a clean cloth.

Dryer exterior

- Clean with a soft, damp cloth. Do not use abrasive substances.
- Protect the surface from sharp objects.
- Do not place any heavy or sharp objects or a detergent container on the dryer. They can scratch or damage the top cover of the dryer.
- The dryer has a high-gloss finish on the entire surface. Be careful not to scratch or damage the surface.

Exhaust system

- Check and clean the exhaust system on a yearly or regular basis to maintain optimum performance.
- The external exhaust hood must be cleaned more frequently to ensure proper air flow.

DV7500K-03381C-02_EN.indd 56 4/7/2016 5:05:56 PM

Troubleshooting

Checkpoints

If the dryer operates abnormally, first check the list of problems in the table below and try the suggested actions.

Problem	Action
Does not run.	• Make sure the door is latched shut. • Make sure the power cord is plugged into a live electrical outlet. • Check your home's circuit breakers or fuses. • Press or tap **START/PAUSE** again if the door was opened during a cycle. • Clean the lint filter.
Does not heat.	• Check your home's circuit breakers or fuses. • Some cycles do not require heat. Check the selected cycle again. • For a gas dryer, make sure the gas supply is on. • Clean the lint filter and exhaust duct. • The dryer may have moved into the cool-down phase of the cycle.
Does not dry.	• Check all of the above, plus... • Make sure the exhaust hood outside your home can open and close freely. • Check the exhaust system for lint buildup. Ducting should be inspected and cleaned annually. • Use a 4" rigid metal exhaust duct. • Do not overload. 1 wash load = 1 dryer load. • Dry heavy items and light weight items separately. • Large, bulky items, such as blankets or comforters, may require repositioning to ensure even drying. • Make sure that your washer is draining properly and extracting adequate water from the load. • The load may be too small to tumble properly. Add a few towels and restart the dryer. • The load may be too large to tumble properly. Remove some items and restart the dryer. • Clean the lint filter.

DV7500K-03381C-02_EN.indd 57 4/7/2016 5:05:56 PM

Troubleshooting

Problem	Action
Is noisy.	• Check the load for objects such as coins, loose buttons, nails, etc. Remove promptly. • It is normal to hear the dryer gas valve or heating element cycle on and off during the drying cycle. • Make sure the dryer is leveled properly as outlined in the installation instructions. • It is normal for the dryer to hum due to the high velocity of air moving through the dryer drum, fan, or exhaust system.
Dries unevenly.	• Seams, pockets, and other similarly heavy areas may not be completely dry when the rest of the load has reached the selected dryness level. This is normal. You can choose a higher dryness level or a cycle that involves a higher dryness level. • If one heavy item is dried with a light weight load, such as one towel with sheets, it is possible that the heavy item will not be completely dry when the rest of the load has reached the selected dryness level. • For the best drying results, dry heavy items and light weight items separately.
Has odors.	• Household odors from paint, varnish, strong cleaners, etc. may enter the dryer with the surrounding room air. This is normal as the dryer draws the air from the room, heats it, pulls it through the tumbler, and exhausts it outside. • When these odors linger in the air, completely ventilate the room before using the dryer. • Use a cycle featuring the Refresh function. If odors persist, wash and dry the items again.
Lint on clothes.	• Make sure the lint filter is cleaned before every load. For clothes that naturally build up lint, clean the filter during the cycle. • Some fabrics are lint producers (for example, a fuzzy white cotton towel) and they must be dried separately from clothes that are lint trappers (for example, a pair of black linen pants). • Divide larger loads into smaller loads for drying. • Check pockets thoroughly before drying, then dry clothes. • Remove lint inside the drum before drying a load.

DV7500K-03381C-02_EN.indd 58 4/7/2016 5:05:56 PM

Problem	Action
Items still wrinkled after Wrinkle Prevent (Wrinkle Away, Wrinkle Release).	• Small loads of 1 to 4 items work best. • Load fewer items. Load similar-type items. • Take out the items immediately after drying is complete.
Water drips from the nozzle when the Steam cycles starts.	• This is steam condensation. The dripping water will stop after a short time.
Sprayed water is not visible during Steam cycles.	• Sprayed water is difficult to see when the door is closed.
Extended time.	• Sensor Dry automatically senses the moisture in the load and shuts the dryer off when the selected dryness level is reached. The drying time can change according to the type and amount of laundry. See the cycle chart for reference.

If a problem persists, contact a local Samsung service center.

DV7500K-03381C-02_EN.indd 59 4/7/2016 5:05:56 PM

Troubleshooting

Samsung Smart Home

Problem	Action
I could not find “Samsung Smart Home” in the app market.	• The Samsung Smart Home app is available for smartphones that run Android 4.0 (ICS) or higher, or iOS 7.0 or higher.
The Samsung Smart Home app fails to operate.	• The Samsung Smart Home app is available for applicable models only. • The old Samsung Smart Dryer app cannot connect with Samsung Smart Home models.
The Samsung Smart Home app is installed but is not connected to my dryer.	• You must log into your Samsung account to use the app. • Make sure that your router is operating normally. • Make sure that the Smart Home Adapter is inserted properly. • If the Smart Control (Smart Monitor) indicator on the dryer’s display is off, this indicates that no network connection has been established. Use the Samsung Smart Home app to connect and register the dryer with your home network access point (AP).
Could not log into the app.	• You must log into your Samsung account to use the app. • If you don’t have a Samsung account, follow the app’s onscreen instructions to create one.
An error message appears when I try to register my dryer.	• The connection may fail due to the distance from your access point (AP) or electrical interference from the surrounding environment. Wait a moment and try again.
The Samsung Smart Home app is successfully connected to my dryer but does not run.	• Exit and restart the Samsung Smart Home app or unplug your router and then reconnect it. • Remove the Smart Home Adapter, and reconnect it properly. Then, try again.

DV7500K-03381C-02_EN.indd 60 4/7/2016 5:05:56 PM

Information codes

If the dryer fails to operate, you may see an information code on the display panel. To determine what you should do, check the list of codes in the table below, and then try the suggested actions.

Code	Action
DC	Operating the dryer with the door open. • Make sure the door is properly closed. • Make sure laundry is not caught in the door.
FC	Invalid power source frequency • Try restarting the cycle. • If this information code remains, contact a Samsung service center.
AC	Electronic control problem (Invalid Communication). • Contact a Samsung service center.
HC	High temperature heating check • Clean the lint filter. • If this information code remains, contact a Samsung service center.
9C1	The electronic control needs to be checked. • Check if power is supplied properly. • If the information code remains, contact a Samsung service center.
tC	The Thermistor1 resistance is very low or high. • Check for a clogged lint screen • Check if the vent system is restricted. • If this information code remains, contact a Samsung service center.
tC5	The Thermistor2 resistance is very low or high. • Check for a clogged lint screen. • Check if the vent system is restricted. • If this information code remains, contact a Samsung service center.
dF	Incorrect door switch. • Contact a Samsung service center.

If any information code keeps appearing on the screen, contact a Samsung service center.

DV7500K-03381C-02_EN.indd 61 4/7/2016 5:05:56 PM

Specifications

Fabric care chart

The following symbols provide garment care direction. The clothing care labels include symbols for drying, bleaching, ironing, and dry cleaning. The use of symbols ensures consistency among garment manufacturers of domestic and imported items. Follow care label directions to optimize garment life and reduce laundering problems.

Wash cycle

	Normal
	Permanent press / Wrinkle resistant / Wrinkle control
	Gentle / Delicates
	Hand wash

Water temperature

•••	Hot
••	Warm
•	Cold

NOTE

The Water Temperature table lists appropriate wash water temperatures for various items. The temperature range is 106 - 126 °F (41 - 52 °C) for Hot, 84 - 106 °F (29 - 41 °C) for Warm, and 61 - 84 °F (16 - 29 °C) for Cold. (Wash water temperature must be a minimum of 61 °F (16 °C) for detergent activation and eff ective cleaning.)

Bleach

	Any bleach (when needed)
	Only non-chlorine (color-safe) bleach (when needed)
	Tumble dry

Normal

	Permanent press / Wrinkle resistant / Wrinkle control
	Gentle / Delicates

Special instructions

	Line dry / Hang to dry
	Drip dry
	Dry flat

Heat setting

	High
	Medium
	Low
	Any heat
	No heat / Air

DV7500K-03381C-02_EN.indd 62 4/7/2016 5:05:58 PM

Iron dry or steam temperatures

	High
	Medium
	Low

Warning symbols for laundering

	Do not wash
	Do not wring
	Do not bleach
	Do not tumble dry
	No steam (added to iron)
	Do not iron

Dry-clean

	Dry-clean
	Do not dry-clean
	Line dry / Hang to dry
	Drip dry
	Dry flat

Protecting the environment

This appliance is manufactured from recyclable materials. If you decide to dispose of this appliance, please observe local waste disposal regulations. Cut off the power cord so that the appliance cannot be connected to a power source. Remove the door so that animals and small children cannot get trapped inside the appliance.

DV7500K-03381C-02_EN.indd 63 4/7/2016 5:06:00 PM

Specifications

Specification sheet

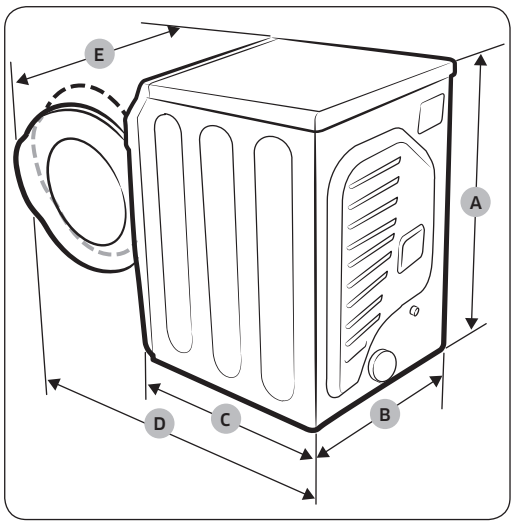

NOTE

"A. Height" Spec can vary from 42.4 to 43.3 inches (107.7 - 108.9 cm) depending on the leveling feet adjustments.

Type			Front loading dryer	
			DV50K7500E(G)*	DV45K6500E(G)*, DV45K6200E(G)*
Dimensions	A. Height	Product - inches (cm)	38.7 (98.4)	
		Required for Installation - inches	40.7	
	B. Width	Product - inches (cm)	27.0 (68.6)	
		Required for Installation - inches	29.0	
	C. Depth	Product - inches (cm)	32.6 (82.8)	32.4 (82.3)
		Required for Installation - inches	37.6	
	D. Depth with door open 90°	Product - inches (cm)	53.1 (135.0)	53 (134.5)
		Required for Installation - inches	58	
	E. Width with door open 110°	Product - inches (cm)	39.4 (100)	
		Required for Installation - inches	44.6	
Water pressure - psl (kPa)			20 - 116 (137 - 800)	
Weight		lb (kg)	125.6 (57)	
Heater rating		Electric (W)	5300	
		Gas (BTU/hr)	22000	

DV7500K-03381C-02_EN.indd 64 4/7/2016 5:06:00 PM

Cycle chart

NOTE

For best results, follow the load size recommendations for each dry cycle.

- Large load: Fill the drum to about ¾ full. Do not add items over this level as they need to tumble freely.
- Medium load : Fill the drum to about ½ full.
- Small load : Fill the drum with 3-5 items, not more than ¼ full.

Cycle	Recommended items	Load size	Dry Level
ECO NORMAL (DV45K6500E(G)*, DV50K7500E(G)*)	Cottons, work clothes, linens		Normal Dry (Adjustable)
NORMAL	Cottons, work clothes, linens, mixed loads		Normal Dry (Adjustable)
HEAVY DUTY	Heavy Fabrics such as jeans, corduroys, heavy work clothes		Normal Dry (Adjustable)
BEDDING	Bulky items such as blankets, sheets, comforters, pillows		Normal Dry (Adjustable)
PERM PRESS	Shirts, synthetic fabrics, knits, wrinkle-free cottons, permanent press		Normal Dry (Adjustable)
WOOL (DV45K6500E(G)*, DV50K7500E(G)*)	For machine washable and tumble dryable wool only (Maximum: 3 lbs)		Normal Dry (Not adjustable)
DELICATES	Underwear, blouses, lingerie		Normal Dry (Adjustable)
ACTIVE WEAR	Water-repellent wear, performance clothes, sports wear (Maximum: 4 lbs)		Normal Dry (Not adjustable)
QUICK DRY	Small loads		-
TIME DRY	Any load		-
AIR FLUFF	Foam, rubber, plastic		-
REFRESH	Shirts, trousers, comforters, pillows		-
WRINKLE AWAY	Shirts, trouser, blouses		-
STEAM SANITIZE	Bedding, curtains, children's clothing		Very Dry (Not adjustable)

DV7500K-03381C-02_EN.indd 65 4/7/2016 5:06:00 PM

Specifications

NOTE

- ●: factory setting, ●: can be selected

Cycle	Temperature setting					Time setting
	High	Medium	Med Low	Low	Extra Low	
ECO NORMAL (DV45K6500E(G)*, DV50K7500E(G)*)					●	
NORMAL		●				
HEAVY DUTY	●					
BEDDING	●					
PERM PRESS		●				
WOOL (DV45K6500E(G)*, DV50K7500E(G)*)				●		
DELICATES					●	
ACTIVE WEAR		●				
QUICK DRY	●					●
TIME DRY	●	●	●	●	●	●
AIR FLUFF						●
REFRESH	●					
WRINKLE AWAY	●					●
STEAM SANITIZE	●					

DV7500K-03381C-02_EN.indd 66 4/7/2016 5:06:00 PM

Cycle	Options				
	Anti Static	Mixed Load Bell	Wrinkle Prevent	Adjust Time	Eco Dry
ECO NORMAL (DV45K6500E(G)*, DV50K7500E(G)*)		●	●		
NORMAL	●	●	●		●
HEAVY DUTY	●	●	●		
BEDDING		●	●		
PERM PRESS	●	●	●		
WOOL (DV45K6500E(G)*, DV50K7500E(G)*)			●		
DELICATES	●	●	●		
ACTIVE WEAR			●		
QUICK DRY			●	●	
TIME DRY	●		●	●	●
AIR FLUFF			●	●	
REFRESH			●		
WRINKLE AWAY			●	●	
STEAM SANITIZE			●		

DV7500K-03381C-02_EN.indd 67 4/7/2016 5:06:00 PM

Warranty (U.S.A)

SAMSUNG DRYER

LIMITED WARRANTY TO ORIGINAL PURCHASER

This SAMSUNG brand product, as supplied and distributed by SAMSUNG ELECTRONICS AMERICA, INC. (SAMSUNG) and delivered new, in the original carton to the original consumer purchaser, is warranted by SAMSUNG against manufacturing defects in materials and workmanship for a limited warranty period of:

- One (1) Year All Parts and Labor

This limited warranty begins on the original date of purchase, and is valid only on products purchased and used in the United States.

To receive warranty service, the purchaser must contact SAMSUNG for problem determination and service procedures.

Warranty service can only be performed by a SAMSUNG authorized service center.

The original dated bill of sale must be presented upon request as proof of purchase to SAMSUNG or SAMSUNG's authorized service center.

SAMSUNG will provide in-home service during the warranty period at no charge, subject to availability within the contiguous United States.

In-home service is not available in all areas.

To receive in-home service, product must be unobstructed and accessible to the service agent.

If service is not available, SAMSUNG may elect to provide transportation of the product to and from an authorized service center.

SAMSUNG will repair, replace, or refund this product at our option and at no charge as stipulated herein, with new or reconditioned parts or products if found to be defective during the limited warranty period specified above.

All replaced parts and products become the property of SAMSUNG and must be returned to SAMSUNG.

Replacement parts and products assume the remaining original warranty, or ninety (90) days, whichever is longer.

DV7500K-03381C-02_EN.indd 68 4/7/2016 5:06:01 PM

This limited warranty covers manufacturing defects in materials and workmanship encountered in normal, noncommercial use of this product and shall not apply to the following: damage that occurs in shipment; delivery and installation; applications and uses for which this product was not intended; altered product or serial numbers; cosmetic damage or exterior finish; accidents, abuse, neglect, fire, water, lightning, or other acts of nature or God; use of products, equipment, systems, utilities, services, parts, supplies, accessories, applications, installations, repairs, external wiring or connectors not supplied or authorized by SAMSUNG that damage this product or result in service problems; incorrect electrical line voltage, fluctuations and surges; customer adjustments and failure to follow operating instructions, maintenance and environmental instructions that are covered and prescribed in the instruction book; product removal and reinstallation; problems caused by pest infestations.

This limited warranty does not cover problems resulting from incorrect electric current, voltage or supply, light bulbs, house fuses, house wiring, cost of a service call for instructions, or fixing installation errors.

SAMSUNG does not warrant uninterrupted or error-free operation of the product.

EXCEPT AS SET FORTH HEREIN, THERE ARE NO WARRANTIES ON THIS PRODUCT EITHER EXPRESS OR IMPLIED, AND SAMSUNG DISCLAIMS ALL WARRANTIES INCLUDING, BUT NOT LIMITED TO, ANY IMPLIED WARRANTIES OF MERCHANTABILITY, INFRINGEMENT OR FITNESS FOR A PARTICULAR PURPOSE.

NO WARRANTY OR GUARANTEE GIVEN BY ANY PERSON, FIRM, OR CORPORATION WITH RESPECT TO THIS PRODUCT SHALL BE BINDING ON SAMSUNG.

SAMSUNG SHALL NOT BE LIABLE FOR LOSS OF REVENUE OR PROFITS, FAILURE TO REALIZE SAVINGS OR OTHER BENEFITS, OR ANY OTHER SPECIAL, INCIDENTAL OR CONSEQUENTIAL DAMAGES CAUSED BY THE USE, MISUSE, OR INABILITY TO USE THIS PRODUCT, REGARDLESS OF THE LEGAL THEORY ON WHICH THE CLAIM IS BASED, AND EVEN IF SAMSUNG HAS BEEN ADVISED OF THE POSSIBILITY OF SUCH DAMAGES.

NOR SHALL RECOVERY OF ANY KIND AGAINST SAMSUNG BE GREATER IN AMOUNT THAN THE PURCHASE PRICE OF THE PRODUCT SOLD BY SAMSUNG AND CAUSING THE ALLEGED DAMAGE.

WITHOUT LIMITING THE FOREGOING, PURCHASER ASSUMES ALL RISK AND LIABILITY FOR LOSS, DAMAGE, OR INJURY TO PURCHASER AND PURCHASER'S PROPERTY AND TO OTHERS AND THEIR PROPERTY ARISING OUT OF THE USE, MISUSE, OR INABILITY TO USE THIS PRODUCT.

THIS LIMITED WARRANTY SHALL NOT EXTEND TO ANYONE OTHER THAN THE ORIGINAL PURCHASER OF THIS PRODUCT, IS NONTRANSFERABLE AND STATES YOUR EXCLUSIVE REMEDY.

DV7500K-03381C-02_EN.indd 69 4/7/2016 5:06:01 PM

Warranty (U.S.A)

Some states do not allow limitations on how long an implied warranty lasts, or the exclusion or limitation of incidental or consequential damages, so the above limitations or exclusions may not apply to you. This warranty gives you specific rights, and you may also have other rights, which vary from state to state.

To obtain warranty service, please contact SAMSUNG at:

Samsung Electronics America, Inc.
85 Challenger Road
Ridgefield Park, NJ 07660
1-800-SAMSUNG (726-7864)
www.samsung.com/us/support

Visits by a Service Engineer to explain functions, maintenance, or installation is not covered by warranty.

Please contact the Samsung call center at the number above for help with any of these issues.

DV7500K-03381C-02_EN.indd 70 4/7/2016 5:06:01 PM

Warranty (CANADA)

SAMSUNG DRYER

LIMITED WARRANTY TO ORIGINAL PURCHASER

This SAMSUNG brand product, as supplied and distributed by SAMSUNG ELECTRONICS CANADA, INC. (SAMSUNG) and delivered new, in the original carton to the original consumer purchaser, is warranted by SAMSUNG against manufacturing defects in materials and workmanship for a limited warranty period of:

- One (1) year part and labor

This limited warranty begins on the original date of purchase, and is valid only on products purchased and used in the Canada.

To receive warranty service, the purchaser must contact SAMSUNG for problem determination and service procedures.

Warranty service can only be performed by a SAMSUNG authorized service center.

The original dated bill of sale must be presented upon request as proof of purchase to SAMSUNG or SAMSUNG's authorized service center.

SAMSUNG will provide in-home service during the warranty period at no charge, subject to availability within the Canada.

In-home service is not available in all areas.

To receive in-home service, product must be unobstructed and accessible to the service agent.

If service is not available, SAMSUNG may elect to provide transportation of the product to and from an authorized service center.

SAMSUNG will repair, replace, or refund this product at our option and at no charge as stipulated herein, with new or reconditioned parts or products if found to be defective during the limited warranty period specified above.

All replaced parts and products become the property of SAMSUNG and must be returned to SAMSUNG.

Replacement parts and products assume the remaining original warranty, or ninety (90) days, whichever is longer.

DV7500K-03381C-02_EN.indd 71 4/7/2016 5:06:01 PM

Warranty (CANADA)

This limited warranty covers manufacturing defects in materials and workmanship encountered in normal, noncommercial use of this product and shall not apply to the following: damage that occurs in shipment; delivery and installation; applications and uses for which this product was not intended; altered product or serial numbers; cosmetic damage or exterior finish; accidents, abuse, neglect, fire, water, lightning, or other acts of nature or God; use of products, equipment, systems, utilities, services, parts, supplies, accessories, applications, installations, repairs, external wiring or connectors not supplied or authorized by SAMSUNG that damage this product or result in service problems; incorrect electrical line voltage, fluctuations and surges; customer adjustments and failure to follow operating instructions, maintenance and environmental instructions that are covered and prescribed in the instruction book; product removal and reinstallation; problems caused by pest infestations.

This limited warranty does not cover problems resulting from incorrect electric current, voltage or supply, light bulbs, house fuses, house wiring, cost of a service call for instructions, or fixing installation errors.

SAMSUNG does not warrant uninterrupted or error-free operation of the product.

EXCEPT AS SET FORTH HEREIN, THERE ARE NO WARRANTIES ON THIS PRODUCT EITHER EXPRESS OR IMPLIED, AND SAMSUNG DISCLAIMS ALL WARRANTIES INCLUDING, BUT NOT LIMITED TO, ANY IMPLIED WARRANTIES OF MERCHANTABILITY, INFRINGEMENT OR FITNESS FOR A PARTICULAR PURPOSE.

NO WARRANTY OR GUARANTEE GIVEN BY ANY PERSON, FIRM, OR CORPORATION WITH RESPECT TO THIS PRODUCT SHALL BE BINDING ON SAMSUNG.

SAMSUNG SHALL NOT BE LIABLE FOR LOSS OF REVENUE OR PROFITS, FAILURE TO REALIZE SAVINGS OR OTHER BENEFITS, OR ANY OTHER SPECIAL, INCIDENTAL OR CONSEQUENTIAL DAMAGES CAUSED BY THE USE, MISUSE, OR INABILITY TO USE THIS PRODUCT, REGARDLESS OF THE LEGAL THEORY ON WHICH THE CLAIM IS BASED, AND EVEN IF SAMSUNG HAS BEEN ADVISED OF THE POSSIBILITY OF SUCH DAMAGES.

NOR SHALL RECOVERY OF ANY KIND AGAINST SAMSUNG BE GREATER IN AMOUNT THAN THE

PURCHASE PRICE OF THE PRODUCT SOLD BY SAMSUNG AND CAUSING THE ALLEGED DAMAGE.

WITHOUT LIMITING THE FOREGOING, PURCHASER ASSUMES ALL RISK AND LIABILITY FOR LOSS, DAMAGE, OR INJURY TO PURCHASER AND PURCHASER'S PROPERTY AND TO OTHERS AND THEIR PROPERTY ARISING OUT OF THE USE, MISUSE, OR INABILITY TO USE THIS PRODUCT.

THIS LIMITED WARRANTY SHALL NOT EXTEND TO ANYONE OTHER THAN THE ORIGINAL PURCHASER OF THIS PRODUCT, IS NONTRANSFERABLE AND STATES YOUR EXCLUSIVE REMEDY.

DV7500K-03381C-02_EN.indd 72 4/7/2016 5:06:01 PM

Some provinces do not allow limitations on how long an implied warranty lasts, or the exclusion or limitation of incidental or consequential damages, so the above limitations or exclusions may not apply to you.

This warranty gives you specific rights, and you may also have other rights, which vary from province to province.

To obtain warranty service, please contact SAMSUNG at:

Samsung Electronics Canada Inc.
2050 Derry Road West,
Mississauga, Ontario L5N 0B9 Canada
1-800-SAMSUNG (726-7864)
www.samsung.com/ca/support (English)
www.samsung.com/ca_fr/support (French)

Visits by a Service Engineer to explain functions, maintenance, or installation is not covered by warranty.

Please contact the Samsung call center at the number above for help with any of these issues.

DV7500K-03381C-02_EN.indd 73 4/7/2016 5:06:01 PM

SAMSUNG

Scan the QR code* or visit
www.samsung.com/spsn
to view our helpful
How-to Videos and Live Shows

*Requires reader to be installed on your smartphone

Scan this with your smartphone

QUESTIONS OR COMMENTS?

COUNTRY	CALL	OR VISIT US ONLINE AT
U.S.A	1-800-SAMSUNG (726-7864)	www.samsung.com/us/support
CANADA	1-800-SAMSUNG (726-7864)	www.samsung.com/ca/support (English) www.samsung.com/ca_fr/support (French)

ENERGY STAR

DC68-03381C-02