Dimensions

Rheem Heat Pump in AHRI

Model #	A	B	C	RP	M	Nominal Size	TXV Code	Height	Note	Furnace	Cabinet
RPM1824D14A	18	19 5/8"	14"	Rheem/Ruud	Mfg Housing	1824	D	14	A	E30B3D0(6,8,10,12,15)ABB	97-F***-21
RPM3036Y20E1	18	19 5/8"	20"	Rheem/Ruud	Mfg Housing	3036	Y	20	E1	E30B4D0(8,10,12,15)ABB	97-F***-21
RPM4248Y26E2	18	19 5/8"	26 1/2"	Rheem/Ruud	Mfg Housing	4248	Y	26	E2	E30B5D0(8,10,12,15)ABB	97-F***-27

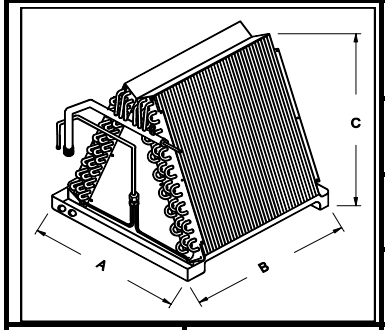

Note: A, E1, E2 coil heights work with Mortex Furnace Cabinets.
Additional Notes refer to new construction: A = Fits all Gas or Electric Furnace. Note: E1 = Fits all Electric furnaces, slight modification on Coleman Electric. Note: E2 = Fits Nordyne Electric Furnace.

See www.ahridirectory.org for Certificates

Pricing subject to change without notice

22 Pallets will receive Prepaid Freight

Special Note: The above AHRI listed Indoor Coils will allow Customer to use Rheem RP15 Series Equipment without blower assist or the use of the Rheem RP14 with or without a blower assist. Look at AHRI prior to installing either of these two options. Contact Factory if needed.

Indoor Unit	Outdoor Unit	Indoor Air	Capacity	EER 95F	SEER	High Heat	HSPF	Low Heat	Blower Assist if Required	Coil Cabinet
RPM1824D14A	RP1418FJ1	565	16000	11	14	15400	8.2	9100	N/A	97-F***-21
RPM1824D14A	RP1424FJ1	715	22000	11	14	20600	8.2	13500	N/A	97-F***-21
RPM3036Y20E1	RP1430FJ1	995	27600	11	14	26200	8.2	16600	N/A	97-F***-21
RPM3036Y20E1	RP1436FJ1	1095	33000	11	14	33000	8.2	22400	N/A	97-F***-21
RPM4248Y26E2	RP1442FJ1	1200	40000	11	14	39000	8.2	25600	N/A	97-F***-27
RPM4248Y26E2	RP1448FJ1	1335	44000	11	14	43500	8.2	29000	N/A	97-F***-27
RPM1824D14A	RP1424*J1	740	22000	11	14	21400	8.2	12600	E30B3D0(6,8,10,12,15)ABB	97-F***-21
RPM3036Y20E1	RP1430*J1	995	27000	11	14	26400	8.2	16600	E30B4D0(6,8,10,12,15)ABB	97-F***-21
RPM3036Y20E1	RP1436*J1	1160	33000	11	14	34000	8.2	23200	E30B4D0(6,8,10,12,15)ABB	97-F***-21
RPM4248Y26E2	RP1442*J1	1350	40000	11	14	39000	8.2	24800	E30B5D0(6,8,10,12,15)ABB	97-F***-27
RPM4248Y26E2	RP1448*J1	1500	45000	11	14	45000	8.2	29800	E30B5D0(6,8,10,12,15)ABB	97-F***-27
RPM1824D14A	RP1524BJ1	700	21400	11	14	20600	8.2	13500	N/A	97-F***-21
RPM3036Y20E1	RP1530AJ1	990	27400	11	14	27400	8.2	17000	N/A	97-F***-21
RPM3036Y20E1	RP1536AJ1	1075	33000	11	14	31800	8.2	22200	N/A	97-F***-21
RPM4248Y26E2	RP1542AJ1	1300	40000	11	14	39000	8.2	25600	N/A	97-F***-27
RPM4248Y26E2	RP1548AJ1	1375	44000	11	14	42500	8.2	28800	N/A	97-F***-27

9/21/2015