Code No. 0816195
Rev. 6 (02/15)

INSTALLATION INSTRUCTIONS FOR EXPOSED ROYAL® FLUSHOMETERS



Closet Flushometer for 1½" Top Spud
MODELS 110/111, 113, 115 & 116

Service Sink Flushometer for 1½" Top Spud
MODEL 117



Urinal Flushometer for 1¼" Top Spud
MODEL 180

Urinal Flushometer for ¾" Top Spud
MODEL 186



Closet Flushometer for 1½" Back Spud
MODELS 120, 121 & 122

LIMITED WARRANTY

Unless otherwise noted, Sloan Valve Company warrants this product, manufactured and sold for commercial or industrial uses, to be free from defects in material and workmanship for a period of three (3) years (one (1) year for special finishes, SF faucets, PWT electronics and 30 days for PWT software) from date of first purchase. During this period, Sloan Valve Company will, at its option, repair, replace, or refund the purchase price of any product which fails to conform with this warranty under normal use and service. This shall be the sole and exclusive remedy under this warranty. Products must be returned to Sloan Valve Company, at customer's cost. No claims will be allowed for labor, transportation or other costs. This warranty extends only to persons or organizations who purchase Sloan Valve Company's products directly from Sloan Valve Company for purpose of resale. This warranty does not cover the life of the batteries.

THERE ARE NO WARRANTIES WHICH EXTEND BEYOND THE DESCRIPTION ON THE FACE HEREOF. IN NO EVENT IS SLOAN VALVE COMPANY RESPONSIBLE FOR ANY CONSEQUENTIAL DAMAGES OF ANY MEASURE WHATSOEVER.

PRIOR TO INSTALLATION

Before you install the flushometer, be sure the items listed below are installed. Also, refer to the rough-in diagram below.

- Closet fixture •Drain line •Water supply line

IMPORTANT:

- **ALL PLUMBING SHOULD BE INSTALLED IN ACCORDANCE WITH APPLICABLE CODES AND REGULATIONS.**
- **WATER SUPPLY LINES MUST BE SIZED TO PROVIDE AN ADEQUATE VOLUME OF WATER FOR EACH FIXTURE.**
- **FLUSH ALL WATER LINES PRIOR TO MAKING CONNECTIONS.**

Sloan's flushometers are designed to operate with 15 to 80 psi (103 to 552kPa) of water pressure. **THE MINIMUM PRESSURE REQUIRED TO THE VALVE IS DETERMINED BY THE TYPE OF FIXTURE SELECTED.**

Consult fixture manufacturer for minimum pressure requirements. Most High Efficiency water closets require a minimum flowing pressure of 25 psi (172 kPa). Many building codes and the ASME A112.19.2 fixture standard list Maximum static water pressure as 80 PSI (552 kPa).

ROUGH-INS

MODELS 110/111, 113, 115, & 116

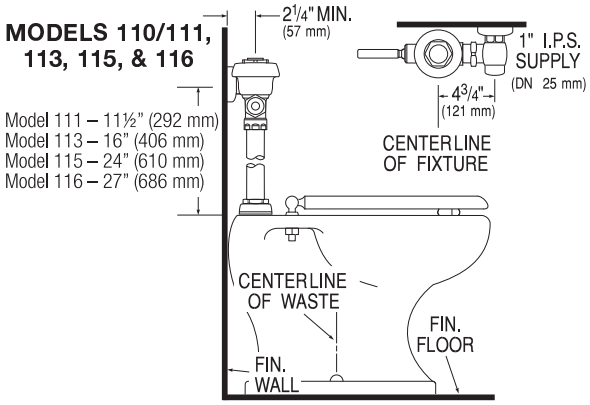

MODELS 180/186

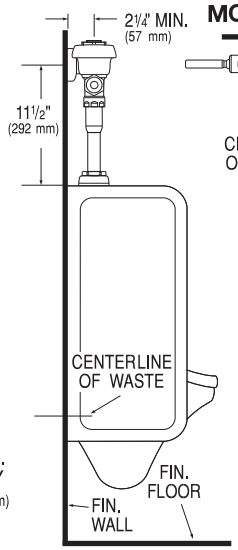

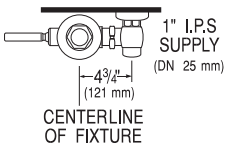

MODEL 117

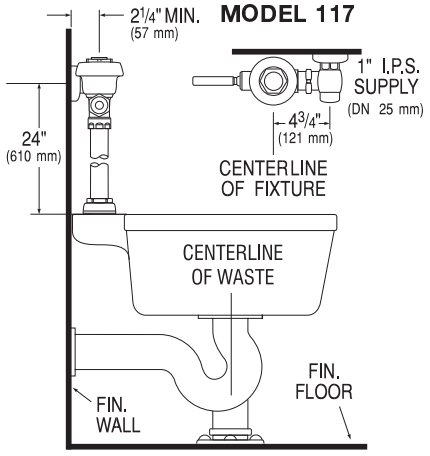

MODELS 120, 121, & 122

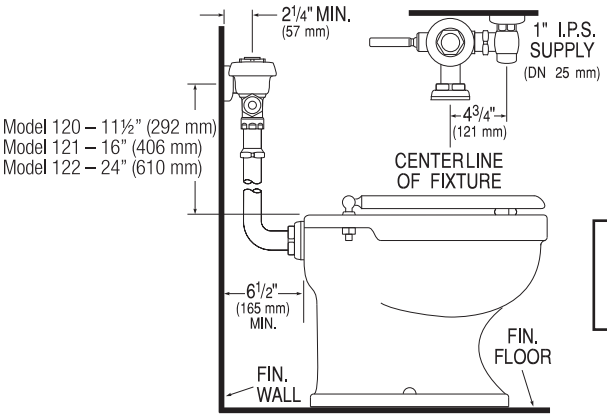

!!! IMPORTANT !!!

WHEN MOUNTED ON AN ADA ACCESSIBLE BOWL, THE ROUGH-IN TO THE SUPPLY INLET SHOULD BE NO HIGHER THAN 37½" OR THE HANDLE WILL EXCEED MAXIMUM HEIGHT ALLOWANCES UNDER ADA GUIDELINES.

TOOLS REQUIRED FOR INSTALLATION

- Straight blade screwdriver
- Sloan A-50 Super-Wrench™, Sloan A-109 Plier Wrench or smooth jawed spud wrench

!!! IMPORTANT !!!

PROTECT THE CHROME OR SPECIAL FINISH OF SLOAN FLUSHOMETERS — DO NOT USE TOOTHED TOOLS TO INSTALL OR SERVICE THESE VALVES. USE A SLOAN A-50 SUPER-WRENCH™, SLOAN A-109 PLIER WRENCH OR SMOOTH JAWED SPUD WRENCH TO SECURE ALL COUPLINGS. SEE "CARE AND CLEANING" SECTION.

!!! IMPORTANT !!!

NEVER OPEN CONTROL STOP TO WHERE THE FLOW FROM THE VALVE EXCEEDS THE FLOW CAPABILITY OF THE FIXTURE. IN THE EVENT OF A VALVE FAILURE, THE FIXTURE MUST BE ABLE TO ACCOMMODATE A CONTINUOUS FLOW FROM THE VALVE.

!!! IMPORTANT !!!

WITH THE EXCEPTION OF CONTROL STOP INLET, DO NOT USE PIPE SEALANT OR PLUMBING GREASE ON ANY VALVE COMPONENT OR COUPLING!

!!! IMPORTANT !!!

THIS PRODUCT CONTAINS MECHANICAL AND/OR ELECTRICAL COMPONENTS THAT ARE SUBJECT TO NORMAL WEAR. THESE COMPONENTS SHOULD BE CHECKED ON A REGULAR BASIS AND REPLACED AS NEEDED TO MAINTAIN THE VALVE'S PERFORMANCE.

Please take the time to read this manual to ensure proper product installation and longevity.

When further assistance is required, please contact your local Sloan Representative or Sloan Technical Support at: 1-888-SLOAN-14 (1-888-756-2614)

1 - INSTALL OPTIONAL SWEAT SOLDER ADAPTER (ONLY IF YOUR SUPPLY PIPE DOES NOT HAVE A MALE THREAD)

A Measure from finished wall to C/L of fixture spud. Cut pipe 1¼" (32 mm) shorter than this measurement. Chamfer O.D. and I.D. of water supply pipe.

B Slide threaded adapter fully onto pipe.

C Sweat solder the Adapter to pipe.

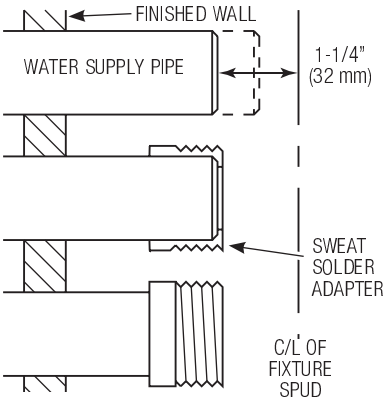

2 - INSTALL COVER TUBE, WALL FLANGE AND CONTROL STOP TO SUPPLY PIPE

A Measure from finished wall to first thread of Adapter or threaded supply pipe (dimension "X"). Cut Cover Tube to this length.

B Slide Cover Tube over pipe. Slide Wall Flange over Cover Tube until against wall.

C Thread Control Stop onto pipe. Tighten with a wrench.

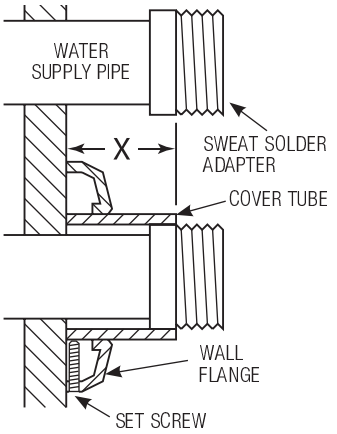

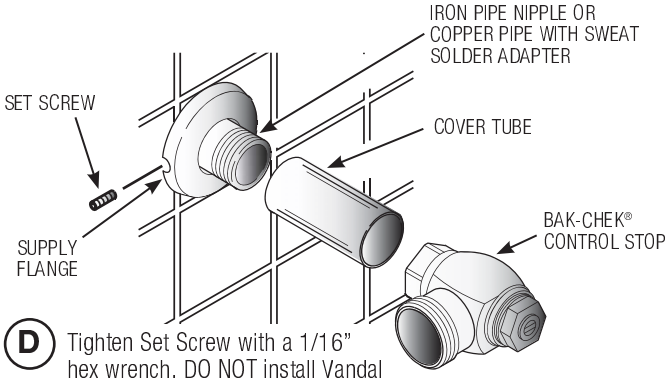

D Tighten Set Screw with a 1/16" hex wrench. DO NOT install Vandal Resistant Stop Cap at this time.

3 - INSTALL VACUUM BREAKER FLUSH CONNECTION

A Slide Spud Coupling, Nylon Slip Gasket, Rubber Gasket and Spud Flange over Vacuum Breaker Tube.

B Insert Tube into Fixture Spud.

C Hand tighten Spud Coupling onto Fixture Spud.

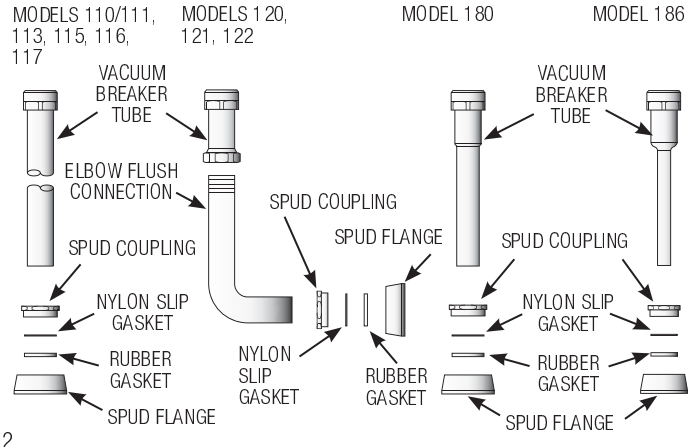

4 - INSTALL FLUSHOMETER AND TRIPLE SEAL HANDLE ASSEMBLY

NOTE

For high efficiency urinal flushometers (0.5, 0.25 and 0.125 gpf), it is necessary to first insert the flow control component into the tailpiece assembly. See the H1015A flow control kit and separate instructions for details on how to install.

A Lubricate tailpiece O-ring with water. Insert Adjustable Tailpiece into Control Stop. Tighten Tailpiece Coupling by hand.

B Align Flushometer directly above the Vacuum Breaker Flush Connection by sliding the Flushometer Body IN or OUT as needed. Tighten Vacuum Breaker Coupling by hand.

NOTE

Maximum adjustment of the Sloan Adjustable Tailpiece is 1/2" (13 mm) IN or OUT from the standard 4-3/4" (121 mm) (centerline of Flushometer to centerline of Control Stop).

If roughing-in measurement exceeds 5-1/4" (133 mm), consult factory for longer tailpiece.

C Align Flushometer Body and securely tighten first the Tailpiece Coupling (1), then the Vacuum Breaker Coupling (2), and finally the Spud Coupling (3). Use a wrench to tighten these couplings in the order shown.

D Install the red A-31 Handle Gasket on the Handle Assembly. Insert the Handle Assembly into the Handle opening in the Flushometer Body. Securely tighten the Handle coupling with a wrench.

Sloan's triple-sealed Flushometer Handle is ADA-complaint.

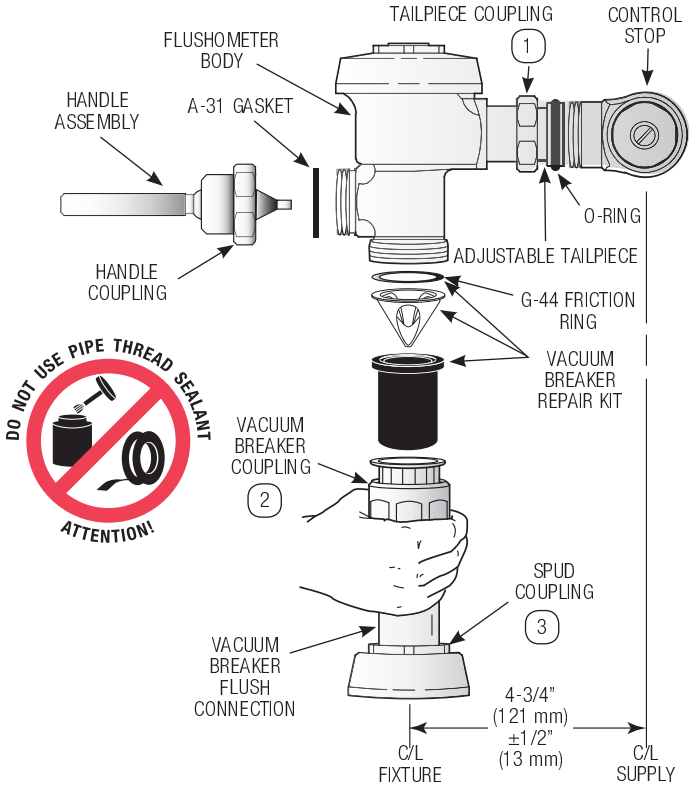

5 - FLUSH OUT SUPPLY LINE

A Make sure Control Stop is CLOSED and remove Flushometer Outer Cover.

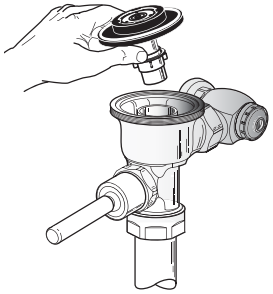

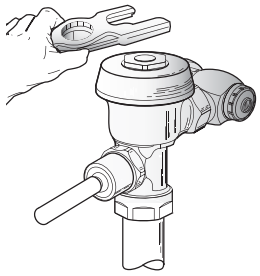

B Remove Inside Cover and lift out Inside Parts Assembly.

C Reinstall Outside and Inside Cover wrench tight. Open Control Stop to flush supply line. Close Control Stop and remove Outside and Inside Cover.

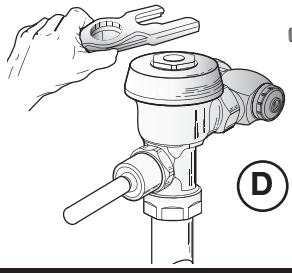

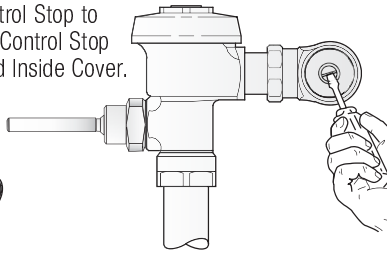

D Reinstall Inside Parts Assembly, Inside Cover and Outside Cover wrench tight.

6 - ADJUST CONTROL STOP AND INSTALL VANDAL RESISTANT STOP CAP

A Open Control Stop COUNTERCLOCKWISE one FULL turn from closed position.

B Activate Flushometer.

C Adjust Control Stop after each flush until the rate of flow delivered properly cleanses the fixture.

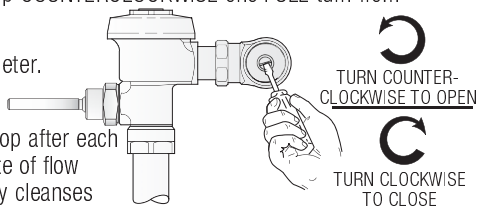

!!! IMPORTANT !!!

Sloan's flushometers are engineered for quiet operation. Excessive water flow creates noise, while too little water flow may not satisfy the needs of the fixture. Proper adjustment is made when plumbing fixture is cleansed after each flush without splashing water out from the lip AND a quiet flushing cycle is achieved.

Never open Control Stop to where the flow from the valve exceeds the flow capability of the fixture. In the event of a valve failure, the fixture must be able to accommodate a continuous flow from the valve.

D Install Vandal Resistant Control Stop Cap onto Control Stop.
- Thread the Plastic Sleeve onto the Stop Bonnet until it is snug (tighten only by hand; do not use pliers or a wrench).
- Place the metal Control Stop Cap over the plastic Sleeve and use the palm of the hand to push or "pop" the Cap over the fingers of the Plastic Sleeve. The Cap should spin freely.

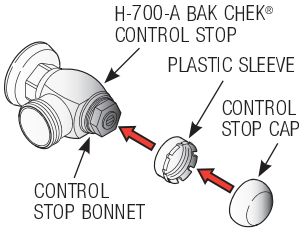

Important: DO NOT install Cap onto Sleeve unless the Sleeve has been threaded onto Control Stop Bonnet. If the Sleeve and Cap are assembled off of the Control Stop, the Sleeve WILL NOT come apart from the Cap.

VANDAL RESISTANT CONTROL STOP CAP REMOVAL

Use a large flat screwdriver as a lever to remove the Cap from the Control Stop. Insert the screwdriver blade between the bottom edge of the Cap and the flat surface of the Control Stop body as shown. Push the screwdriver handle straight back toward the wall to gently lift the Cap. If necessary, work the screwdriver around the diameter of the Cap until you can grasp the Cap and lift it completely off the Sleeve. The Sleeve should remain attached to the bonnet of the Control Stop.

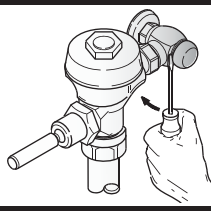

TROUBLESHOOTING GUIDE

1. Flushometer does not function (no flush).

A. Control stop or main valve is closed. Open control stop or main valve.
B. Handle assembly is damaged. Replace handle or install handle repair kit.
C. Relief Valve is damaged. Replace relief valve.

2. Volume of water is not sufficient to siphon fixture.

A. Control stop is not open wide enough. Adjust control stop for desired delivery of water volume.
B. Diaphragm assembly is damaged. Replace diaphragm assembly.
C. Incorrect diaphragm assembly is installed in flushometer; for instance, urinal assembly inside a closet flushometer, or low consumption assembly inside a higher consumption fixture. Determine the flush volume required by the fixture and replace diaphragm. Use valve label and markings on fixture for reference.
D. Water supply volume or pressure is inadequate. If no gauges are available to properly measure supply pressure or volume of water at the flushometer, then remove the relief valve from the diaphragm assembly, reassemble the flushometer and completely open the control stop.
- If the fixture siphons, more water volume is required. Install a higher flushing volume diaphragm. **IMPORTANT – LAWS AND REGULATIONS PROHIBIT THE USE OF HIGHER FLUSHING VOLUMES THAN LISTED ON FIXTURE OR FLUSHOMETER.**
- If the fixture DOES NOT siphon or if a low consumption flush is required, steps must be taken to increase the water supply pressure and/or volume. Contact the fixture manufacturer for minimum water supply requirements of the fixture.

3. Length of flush is too short (short flush).

A. Diaphragm assembly is worn or damaged. Replace diaphragm assembly.
B. Handle assembly is damaged. Replace handle or install handle repair kit.
C. Incorrect diaphragm assembly is installed in flushometer; for instance, urinal assembly inside a closet flushometer, or low consumption assembly inside a higher consumption fixture. Determine the flush volume required by the fixture and replace diaphragm. Use valve label and markings on fixture for reference.

4. Length of flush is too long (long flush) or continuous.

A. Metering bypass hole (upper filter ring) in diaphragm is clogged. Remove the diaphragm assembly. Remove the primary and secondary filter rings from the diaphragm, wash under running water, and reassemble. Replace as necessary.
B. Diaphragm or relief valve is damaged. Replace diaphragm or relief valve.
C. Incorrect diaphragm assembly is installed in flushometer; for instance, closet assembly inside a urinal flushometer, or water saver assembly inside a low consumption flushometer. Determine the flush volume required by the fixture and replace the diaphragm. Use valve label and markings on fixture for reference.
D. Inside cover is damaged. Replace Inside cover.
E. Supply line water pressure has dropped and is not sufficient to close the valve. close control stop until pressure is restored.
F. Relief valve is not seated properly. Disassemble diaphragm components (relief valve, filter rings, and diaphragm unit), wash under running water, and reassemble. Replace as necessary.

5. Chattering noise is heard during flush.

A. Inside cover is damaged. Replace inside cover.
B. Relief valve or diaphragm is damaged. Replace relief valve or diaphragm assembly.

6. Handle Leaks.

A. Handle seal or assembly is damaged. Replace handle or install handle repair kit.

7. Water splashes from fixture.

A. Control stop is open wider than necessary. Adjust control stop for desired delivery of water volume.
B. Water saver/conventional diaphragm assembly is installed on low consumption fixture or closit diaphragm assembly is installed on urinal fixture. Determine the required flush volume (see label on valve or markings on fixture). Replace diaphragm assembly or relief valve for appropriate flush volume of fixture.

When assistance is required, please contact your local Sloan Representative or Sloan Technical Support at: 1-888-SLOAN-14 (1-888-756-2614)

CARE AND CLEANING

DO NOT use abrasive or chemical cleaners (including chlorine bleach) to clean Flushometers that may dull the luster and attack the chrome or special decorative finishes. Use ONLY mild soap and water, then wipe dry with clean cloth or towel.

While cleaning the bathroom tile, protect the Flushometer from any splattering of cleaner. Acids and cleaning fluids will discolor or remove chrome plating.

PARTS LIST

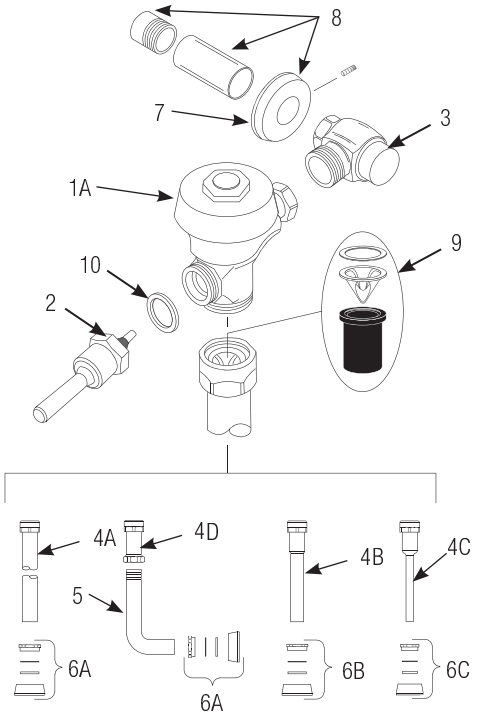

Item No.	Part No.	Description
1	†	Valve Assembly
2	B-73-A	ADA Compliant Handle Assembly
3	H-700-A	Bak-Chek® Control Stop
4A	V-600-AA	1½" (38 mm) Vacuum Breaker Assembly ‡
4B	V-600-AA	1¼" (32 mm) Vacuum Breaker Assembly
4C	V-600-AA	¾" (19 mm) Vacuum Breaker Assembly
4D	V-600-A	Vacuum Breaker Assembly
5	F-109	1½" (38 mm) Elbow Flush Connection
6A	F-56-A	1½" (38 mm) Spud Coupling Assembly
6B	F-57-A	1¼" (32 mm) Spud Coupling Assembly
6C	F-58-A	¾" (19 mm) Spud Coupling Assembly
7	F-7	Supply Flange (Supplied when Valve is not Ordered with Sweat Solder Kit)
8	H-633-AA	1" (25 mm) Sweat Solder Kit with Cast Set Screw Flange
	H-636-AA	¾" (19 mm) Sweat Solder Kit with Cast Set Screw Flange
9	V-651-A	High Back Pressure Vacuum Breaker Repair Kit
10	A-31	Handle Gasket

† Part number varies with valve model variation; consult factory.
‡ Length varies with valve model variation; consult factory.

NOTE: The information contained in this document is subject to change without notice.

SLOAN • 10500 SEYMOUR AVENUE • FRANKLIN PARK, IL 60131
Phone: 1-800-9-VALVE-9 or 1-847-671-4300 • Fax: 1-800-447-8329 or 1-847-671-4380 • sloan.com

© 2015 SLOAN VALVE COMPANY

Code No. 0816195 Rev. 6 (02/15)