Operating and Installation Instructions
Speed Oven

To prevent accidents and machine damage, read these instructions **before** installation or use.

en – US, CA

M.-Nr. 10 228 070

Contents

IMPORTANT SAFETY INSTRUCTIONS 6

Guide to the Speed Oven 18

Control panel 19
Mode selector 20
Display 20
Symbols in the display 20
Rotary selector 21
Sensor buttons 22

Features 24
Model numbers 24
Data plate 24
Items included 24
Standard and optional accessories 24
Glass Tray 25
Wire rack with non-tip safety notches 25
Speed Oven controls 27
Oven safety features 27
System lock 🔒 for the oven 27
Safety switch-off 27
Cooling fan 27
PerfectClean surfaces 28

Before using for the first time 29
Before using for the first time 29
Setting the time of day for the first time 29
Heating the oven 30

Settings 31
Changing the time of day 31
Changing factory default settings 32

System lock 🔒 36

Timer 38
Setting the timer 38

Guide to the modes 40
Solo Modes 40
Microwave (Solo) ≋ 41
Combination modes 42

Contents

Microwave power ... 43
How it works ... 43
Microwave power level ... 43

Selecting cookware ... 44
Containers suitable for microwave use ... 44
Unsuitable containers for microwave use ... 46
Testing dishes for their suitability ... 47
Placing the dish in the Speed Oven ... 48
Lid ... 48

Energy saving tips ... 50

Solo modes ... 51
Quick Guide ... 51
Cooling fan ... 51
Changing the temperature ... 52
Temperature indicator ... 52
Turning a cooking program On / Off automatically ... 53
Setting the duration ... 54
Setting a cooking duration and finish time ... 54
At the end of the cooking duration ... 55
Changing the cooking duration ... 56
Deleting a cooking duration ... 56
Deleting a finish time ... 57

Microwave (Solo) ≋ ... 58
Quick Guide ... 58
Cooling fan ... 59
Changing the microwave power ... 59
Changing the cooking time ... 59
Turning a cooking program On / Off automatically ... 60
Setting a finish time ... 60
Deleting a finish time ... 60

Combi Modes ... 61
Quick Guide ... 61
Cooling fan ... 62
Changing the cooking time ... 62
Changing the microwave power ... 63
Changing the temperature ... 63
Turning a cooking program On / Off automatically ... 63

Minute + ... 64

Contents

Popcorn 65

Bake 66

Roast 68

Broil 70

Microwave: Defrosting/Reheating/Cooking 72
Tables for defrosting, reheating and cooking food using Microwave (Solo) 76
Table for defrosting food 77
Table for reheating food 78
Table for cooking food 79

Defrosting without Microwave power 80

Canning 81
Preparation 81
Canning with Convection Bake 82
Canning with Microwave 82

Gentle Bake 84

Frozen food 85

Cleaning and care 86
Unsuitable cleaning agents 86
Tips 87
Normal soiling 87
Stubborn soiling 88
Lowering the Browning / Broiling element 89

Frequently asked questions 90

Technical Service 95

Caring for the environment 96

Electrical connection 97

Installation diagrams 98
Appliance and cut-out dimensions 98
Installation in a tall cabinet 98
Undercounter installation 99
Combination installation with an oven into a tall cabinet 100
Front dimensions 101

Contents

Installation 102

IMPORTANT SAFETY INSTRUCTIONS

When using the appliance, follow basic safety precautions, including the following:

Read all instructions before installation and use of the oven to prevent accidents and machine damage.

This appliance complies with current safety requirements. Improper use of the appliance can lead to personal injury and material damage.

Read all instructions before installing or using the oven for the first time. Only use the appliance for its intended purpose.

Keep these operating instructions in a safe place and pass them on to any future user.

Use

▶ This appliance is intended for residential use only. Use only as described in these operating instructions.

▶ This appliance is not intended for outdoor use.

▶ The oven is intended for domestic use only: cooking, baking, roasting, broiling, canning, defrosting and reheating of food.
Only use this appliance for its intended purpose.

▶ Risk of fire! Do not use the speed oven to store or dry items which could ignite easily.
If such items were dried in the Speed Oven, the moisture in the item would evaporate causing it to dry out and even self-ignite.

▶ Persons who lack physical, sensory or mental abilities, or experience with the appliance should not use it without supervision or instruction by a responsible person.

Children

▶ Children should not be left alone or unattended in an area where an oven is in use. Never allow children to operate, sit or stand on any part of the oven. **Caution:** Do not store items of interest to children in cabinets above an oven. Children climbing on the oven to reach these items could be injured.

▶ Burn Hazard - Do not allow children to use the oven.

▶ Danger of suffocation! Ensure that any plastic wrappings, bags, etc. are disposed of safely and kept out of the reach of children.

▶ Danger of burns. The oven gets hot at the oven door glass, the vapor vent, the handle and the operating controls. Do not allow children to touch or play in, on or near the oven.

Technical safety

▶ This appliance must be installed and connected in compliance with the installation instructions.

▶ Installation, repair and maintenance work should be performed by a Miele authorized service technician in accordance with national and local safety regulations and the provided installation instructions. Contact Miele's Technical Service Department for examination, repair or adjustment. Repairs and other work by unauthorized persons could be dangerous and may void the warranty.

▶ Maintenance by the user: Never repair or replace any part of the appliance unless the instructions specifically recommend doing so. Service work may only be performed by a qualified technician.

▶ Before installing the oven, check for externally visible damage. Do not operate a damaged appliance.

▶ Reliable and safe operation of the oven can only be guaranteed if it is connected to the power supply.

▶ Operating a damaged appliance can result in microwave leakage and present a hazard to the user. Do not use the appliance if:

- the door is warped,
- the door hinges are loose,
- holes or cracks are visible in the housing, the door, the door seal or the oven interior walls.

▶ To guarantee the electrical safety of this appliance, continuity must exist between the appliance and an effective grounding system. This appliance must be grounded. Connect only to properly grounded outlet. See "Electrical connection - GROUNDING INSTRUCTIONS". It is imperative that this basic safety requirement be met. If there is any doubt, have the electrical system of the house checked by a qualified electrician.

▶ Proper installation: Make sure that your appliance has been installed correctly and that it has been grounded by a qualified technician.

▶ Before installation, make sure that the voltage and frequency listed on the data plate correspond with the household electrical supply. This data must correspond to prevent injury and machine damage. Consult a qualified electrician if in doubt.

▶ Before installation or service, disconnect the power supply to the work area by

- removing the fuse,
- "tripping" the circuit breaker, or
- unplugging the unit. Pull the plug not the cord.

▶ Extension cords do not guarantee the required safety of the appliance (e.g. danger of overheating). Do not use an extension cord to connect this appliance to electricity.

▶ The oven is not to be operated until it has been properly installed within cabinetry.

▶ Danger of electric shock!
Under no circumstances open the outer casing of the appliance.

▶ This appliance must not be used in a non-stationary location (e.g. on a ship).

▶ Do not repair or replace any part of the appliance unless specifically recommended in the operating instructions. All other servicing should be referred to a qualified technician.

▶ Defective components should be replaced by Miele original parts only. Only with these parts can the manufacturer guarantee the safety of the appliance.

▶ In order for the oven to function correctly, it requires an adequate supply of cool air. Ensure that the air flow is not impaired (e.g. insulation in the cabinetry). Also be sure that the cool air supply is not heated by other sources nearby.

▶ If the oven is installed behind a cabinet door, do not close the door while the oven is in operation. Heat and moisture can build up behind the closed door and cause damage to the oven, cabinetry and flooring. Do not close the door until the oven has completely cooled down.

Proper use

⚠ Danger of burns!
The Speed Oven becomes hot when in use.
Depending on the mode selected, you could burn yourself on the heating elements, oven interior, cooked food or oven accessories. Wear pot holders when placing food in or removing food, or when making adjustments in the hot Speed Oven.

▶ Caution: Heating elements may be hot even though they are not glowing. Interior surfaces of an oven become hot enough to cause burns. External parts of the oven such as the door glass, vents, and the control panel can become hot. During and after use, do not touch, or let clothing or other flammable materials come into contact with heating elements or interior surfaces of the oven until they have had sufficient time to cool.

▶ Do not let food sit in the oven for more than one hour before or after cooking. Doing so can result in food poisoning or sickness.

▶ It is important that the heat is allowed to spread evenly throughout the food being cooked.
This can be achieved by stirring and/or turning the food, and observing a sufficiently long standing time, which should be added to the time needed for cooking, reheating or defrosting.

▶ Use only dry, heat-resistant potholders. Moist or damp potholders used on hot surfaces may result in steam burns. Do not let potholders come in contact with oil or grease. Do not substitute dish towels or other bulky items for potholders. Do not let potholders touch hot heating elements.

▶ Loose fitting or hanging garments present a fire hazard. Wear proper apparel while operating the appliance.

▶ Do not heat unopened containers of food in the oven, pressure may cause the containers to burst and result in injury.

▶ To prevent burns, always place oven racks at their desired height while the oven is cool. If the rack must be moved while the oven is hot, do not let pot holders touch hot heating elements.

▶ Open the door carefully to allow hot air or steam to escape before placing or removing food.

▶ To prevent burns, allow the heating elements to cool before cleaning by hand.

▶ Do not leave the oven door open unnecessarily as someone may trip over it or be injured by it.

▶ Never leave the appliance unattended when cooking with oil or fat. They can ignite if overheated. Do not use the oven for frying. Do not use water on grease fires. Turn off the Speed Oven immediately and suffocate the flames by keeping the door closed.

▶ Never store flammable liquids and materials in, above or under an oven, or near cooking surfaces.

▶ To avoid fueling any flames, do not open the Speed Oven door if smoke occurs inside the appliance. Interrupt the process by turning the appliance off and disconnecting it from the power. Do not open the door until the smoke has dissipated.

▶ Do not use the oven to heat the room. The high temperatures radiated could cause objects near the oven to catch fire.

⚠ WARNING

NEVER use this appliance as a space heater to heat or warm the room. Doing so may result in carbon monoxide poisoning and overheating of the oven.

⚠ WARNING

NEVER use this appliance as storage space. Doing so may result in carbon monoxide poisoning and overheating of the oven.

⚠ WARNING

NEVER cover any slots, holes or passages in the oven bottom or cover an entire rack with materials such as aluminum foil. Doing so blocks air flow through the oven and may cause carbon monoxide poisoning. Aluminum foil linings may also trap heat, causing a fire hazard.

▶ Please be aware that durations for using microwave power are often considerably shorter when cooking, reheating and defrosting than when using modes without microwave power. Excessively long cooking times can lead to food drying out and burning or could even cause it to catch fire.
Be sure you keep to recommended broiling times when using the "Broil" mode. Do not use the "Microwave" [≋] mode for dehydrating items such as flowers, herbs, bread, or rolls. Never use "Broil" modes for pre-baked products such as bread or rolls or for drying flowers or herbs. Use "Convection Bake" [⁂] for these items and monitor the process carefully.

▶ Use caution when using alcohol in your recipes. Alcohol evaporates at high temperatures but may, in rare circumstances, combust on the hot heating elements.

▶ Dishes with hollow knobs or handles are not suitable for use with microwave modes. Moisture which has gathered in the hollow recesses can cause pressure to build up and the item can explode.

▶ Fire hazard! Using Microwave [≋] or Microwave combination modes with plastic dishes which are not microwave safe can cause them to melt and damage the appliance.
Do not use any containers or cutlery made from or containing metal, aluminum foil, lead, crystal glassware, temperature-sensitive plastics, wooden utensils or cutlery, metal clips or plastic or paper covered wire ties. Do not use plastic containers with the foil lid only partially removed (see "Containers suitable for microwave use").

▶ For modes without microwave power: Plastic containers which are not suitable for use in an oven can melt at high temperatures and can even damage the oven or catch fire.
Only use containers which are declared by the manufacturer as being suitable for use in an oven. Follow the manufacturer's instructions on use.

▶ Do not leave the microwave oven unattended when reheating or cooking food in disposable containers made of plastic, paper or other inflammable materials.
Before using single-use containers, make sure they are suitable for use in microwave ovens (See "Containers suitable for microwave use - Plastics").

▶ Do not reheat food in the oven in heat-retaining bags which are intended for use in normal ovens.
These heat-retaining bags usually contain a thin layer of aluminum foil which reflects microwaves.This reflected energy can, in turn, cause the outer paper covering to become hot and ignite.

▶ The Speed Oven can be damaged when using Microwave ≋ or Microwave Combination programs if it is empty or incorrectly loaded.
For this reason please do not use modes with microwave power to pre-heat cookware or to dry herbs.
Instead use Convection Bake for these procedures.

▶ When using residual heat to keep food in the oven warm, the high humidity and amount of condensation in the Speed Oven can cause corrosion. The control panel, the countertop or the cabinetry can also suffer damage.
Always cover food when using Microwave ≋. Once food is cooked through, use a lower power for continued cooking to reduce the amount of steam produced from the food. When using residual heat do not turn the Speed Oven off. Instead set the temperature to the lowest setting and leave the oven on the selected mode. The fan will then remain on automatically and dissipate the moisture.

▶ It is recommended to cover all cooked food that is left in the oven to be kept warm. This will prevent moisture from condensing on the interior of the oven.

▶ A build-up of heat can cause damage to the coating on the floor of the oven.
When using Convection Bake do not line the floor of the Speed Oven with anything, e.g. aluminum foil or oven liners. Universal trays and glass trays should not be placed directly on the oven floor.

▶ The door can support a maximum weight of 17.5 lbs (8 kg). Do not sit on or lean against an open door, and do not place heavy objects on it. Also make sure that nothing can get trapped between the door and the oven cavity. The oven could get damaged.

▶ When heating food and drinks, remember that the heat is created in the food itself, and that the container will normally be cooler. The dish is only warmed by the heat of the food. The temperature of the container is not an indication of the temperature of the food or liquid in it.
Check the food for the desired temperature after removing it. **This is particularly important when preparing food for babies.** Shake or stir baby milk and food thoroughly after heating, and try it for temperature to ensure that it will not scald the baby.

▶ The Speed Oven is not suitable for cleaning or disinfecting items. Items can get extremely hot and there is a danger of burning when the item is removed from the appliance.

▶ Do not cook or reheat food or liquids in sealed containers, jars or bottles. With baby bottles, the screw top and nipple must be removed.
Otherwise pressure will build up which can cause the bottle or container to explode. Risk of injury.

▶ When boiling and in particular when re-heating liquids, milk, sauces etc., using microwave power without a boiling rod, the boiling point of the liquid may be reached without the production of typical bubbles. The liquid does not boil evenly throughout. This so-called 'boiling delay' can cause a sudden build up of bubbles when the container is removed from the oven or shaken. This can lead to the liquid boiling over suddenly and explosively. Danger of scalding and burning! The formation of bubbles can be so strong that the pressure forces the oven door open, with a danger of injury and damage.
Before cooking or reheating, thoroughly stir the liquid. Then wait at least 20 seconds before removing the container from the oven. During cooking and reheating you can also place a glass rod or similar in the container and use as a boiling rod, if available.

▶ Eggs can be cooked without their shells using microwave power only if the yolk membrane has been punctured several times first. The pressure could otherwise cause the egg yolk to explode.

▶ Eggs in their shells will explode if cooked with microwave power, even after taking them out of the oven.
They can only be cooked in their shells using microwave heat in a specially designed egg-boiling device available from specialist shops. Hard-boiled eggs must not be reheated in the microwave oven either as they too will explode.

▶ Food with a thick skin or peel, such as tomatoes, sausage, potatoes and eggplant, should be pierced or cut in several places to allow steam to escape and prevent the food from bursting.

▶ To check food temperature, first interrupt the cooking process. Only use a thermometer specifically approved for food use to measure the temperature of the food. Do not use a thermometers containing mercury or liquid as these are not suitable for use with very high temperatures and break very easily

▶ Do not use the oven to heat up heating pads filled with grains, gel, etc.
These pads can ignite even after they have been removed from the Speed Oven.

▶ This oven must only be used for cooking food. Fumes, vapors or heat given off by glues, plastics or flammable liquids and materials could be hazardous. Do not use it as a dryer, kiln, dehumidifier, etc.

▶ Do not obstruct the flow of combustion and ventilation air.

▶ Do not let metal objects (aluminum foil, pans) come in contact with the heating element.

▶ Make certain that the power cords of small appliances do not come in contact with or get caught in the oven door.

Cleaning and care

▶ Do not use a steam cleaner to clean this oven.
Steam could penetrate electrical components and cause a short circuit.

▶ Only clean parts listed in these Operating and Installation Instructions.

▶ Scratches on the door glass can cause the glass to break.
Do not use abrasive cleaners, hard sponges, brushes or sharp metal tools to clean the door glass.

▶ To avoid corrosion on the stainless steel surfaces of the Speed Oven, remove any splashes on the interior walls of the oven from food or liquids containing salt.

▶ Do not use oven cleaners. Commercial oven cleaners or oven liners of any kind should not be used in or around any part of the oven.

Accessories

▶ Use only genuine original Miele parts. If parts or accessories from other manufacturers are used, the warranty will become void.

SAVE THESE INSTRUCTIONS AND REVIEW THEM PERIODICALLY

Guide to the Speed Oven

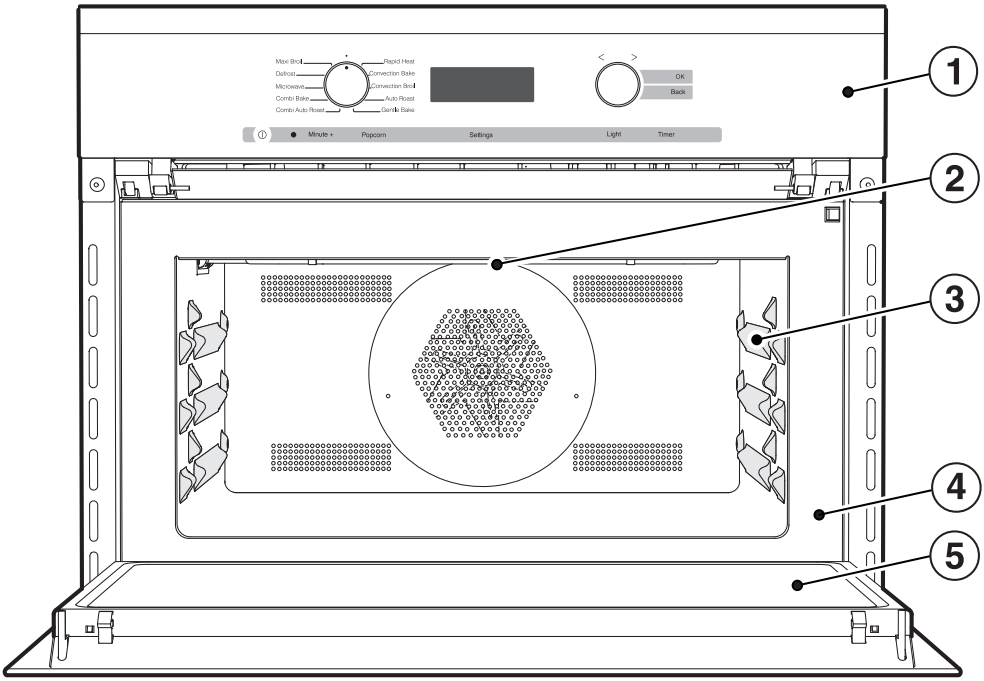

① Control panel

② Upper heating element

③ 3 Shelf levels for the glass tray and rack

④ Front frame with data plate

⑤ Door

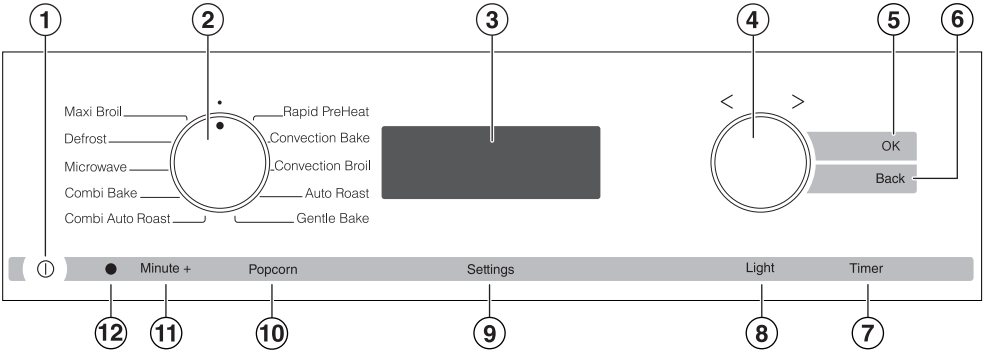

① On / Off button ⏻
To turn the appliance on and off

② Mode selector
To select oven modes

③ Display
Displays the time of day and settings

④ Rotary selector < >
To select values

⑤ "OK" sensor button
Confirms settings and instructions

⑥ "Back" sensor button
To go back one step at a time

⑦ "Timer" sensor button
To set the timer

⑧ "Light" sensor button
To turn the oven interior lighting on and off

⑨ "Settings" sensor button
To access settings

⑩ "Popcorn" sensor button
To start the "Popcorn" function

⑪ "Minute +" button
To start the "Minute +" function

⑫ Optical interface
(for service technician use only)

Mode selector

To select an oven mode.

It can be turned clockwise or counter-clockwise.

Oven modes

- Maxi Broil
- Defrost
- Microwave
- Combi Bake
- Combi Auto Roast
- Rapid PreHeat
- Convection Bake
- Convection Broil
- Auto Roast
- Gentle Bake

Display

The display shows the time of day or your settings.

Symbols in the display

Depending on the position of the mode selector ◯ and/or which button is pressed, the following symbols will appear:

Symbol / Mode		◯
	Timer	Any
	Temperature indicator	Operating mode
	Temperature	
	Microwave power level	
	Cooking time	
	Finish time	
Start	Start Microwave	
	Settings *P*	•
	Time of day	
	System lock	

A mode can only be set or changed if the mode selector is in the correct position.

Rotary selector

Use the rotary selector < > to set temperatures, microwave powers and durations.

Turning it clockwise will increase the values, and turning it counter-clockwise will decrease them.

It can also be used to highlight a mode by moving the ▲ in the display.

It can be turned clockwise or counter-clockwise.

Sensor buttons

The sensor buttons react to touch. Each touch is confirmed with an audible tone. The tone can be turned on or off by selecting the status S 0 in the settings P 3 (see "Settings").

Sensor button	Function	Notes
OK	For accessing functions and saving settings	When functions are marked with a ▲ they can be accessed by selecting OK. As long as the triangle ▲ is flashing you can change the selected function. Press OK to save the change.
Back	To go back a step	
Timer	For setting the kitchen timer	If the time of day is visible, you can enter a timer duration at any time, e.g. when boiling eggs on the cooktop. If the display is turned off, the "Timer" button will not react until the oven is turned on.
Light	For turning the oven interior lighting on and off	If the time of day display is turned on, the oven interior lighting can be turned on and off by touching the "Light" sensor button, for example when cleaning the oven. If the time of day display is turned off, the "Light" sensor button will not react until the oven is turned on. The oven interior lighting turns off after 15 seconds during cooking or remains constantly turned on, depending on the setting selected.

Sensor button	Function	Notes
Settings	To access functions	If the time of day is visible in the display and the mode selector is in the • position, "Settings," "Time of Day," and "System Lock" 🔒 will appear when the "Settings" sensor button is tapped. If the time of day display is turned off, the "Settings" sensor button ▸≡ will not react until the oven is turned on. During the cooking process, you can adjust the temperature 🌡, cooking duration ⏱, and finish time ⏰ and set the microwave power level ≋ in the combi modes by selecting the appropriate sensor button.
Popcorn	"Popcorn" function	The Microwave mode starts with a microwave power level of ---- and a duration of 3 minutes (see "Popcorn"). The mode selector must be pointing to •.
Minute +	"Minute +" function	The microwave starts at maximum microwave power level and a cooking time of 1 minute (see the "Minute +" chapter). Tapping the button increases the cooking time step by step. The mode selector must be pointing to •.

Model numbers

A list of the ovens described in these operating instructions can be found on the back page.

Data plate

The data plate located on the front frame of the oven is visible when the door is open.

Printed on the data plate are the model number, serial number and the connection data (voltage/frequency/ maximum rated load) of the oven.

Have this information available when contacting Miele Technical Service.

Items included

The following items are included with this appliance:

- The operating and installation instructions for using the Speed Oven
- Screws for securing your appliance into the cabinetry
- Various accessories

Standard and optional accessories

This Speed Oven is supplied with a glass tray and rack.

All accessories and cleaning and care products in these instructions are designed to be used with Miele ovens.

They can be ordered from the Mieleusa.com website or Miele.

When ordering, please have ready the model number of your oven and of the desired accessories.

Glass Tray

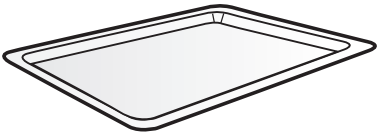

The glass tray is suitable for use with all operating modes.

Always use the glass tray when using Microwave (Solo) [≋].

Do not place items weighing more than 17.5 lbs (8 kg) on it.

Do not place the hot glass tray on a cold surface, such as a tiled or granite countertop. The glass tray could get damaged. Use a suitable heat-resistant mat or pot rest.

Wire rack with non-tip safety notches

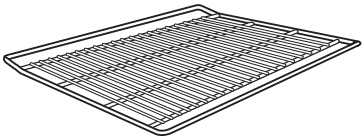

The rack is only suitable for cooking in Combination modes and modes that do not use microwave. It is **not suitable** for cooking in the Microwave (Solo) [≋] mode.

Danger of burns! The rack gets hot during the cooking process.
Use pot holders when placing food in and taking food out of a hot oven.

Use of the rack with the Microwave (Solo) [≋] mode can cause damage to the oven and rack due to possible sparking. The rack should be used on a shelf level. Do not place it on the floor of the oven.

Do not place items weighing more than 17.5 lbs (8 kg) on the rack.

The rack has non-tip safety notches which prevent it being pulled completely out when it only needs to be pulled out partially.

When pushing the rack back in, always ensure that the safety notches are at the **back** of the oven.

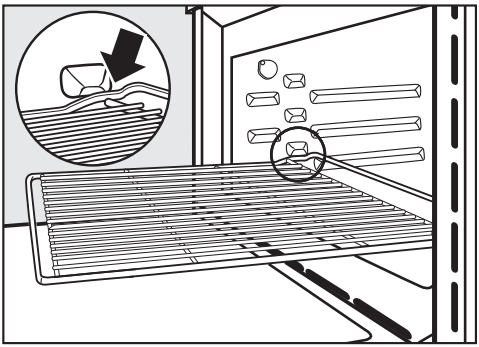

- To remove the rack, lift it upwards slightly at the front when the safety notches connect with the sides of the oven.

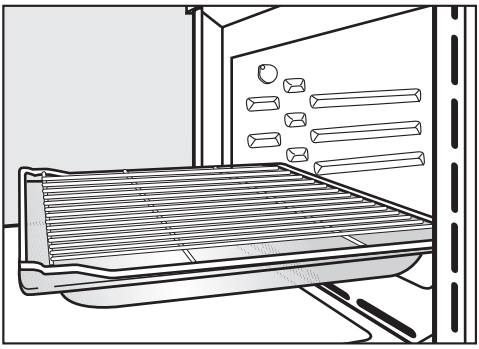

- We recommend using the rack together with the glass tray when cooking items on the rack which might drip.

Round Baking Form HBF 27-1

Microwave modes will damage the Round Baking Form.
Do not use the round baking form when using Microwave (Solo) ≋ or Combi modes.

This circular form is suitable for cooking fresh or frozen pizzas, flat cakes, tarts and baked goods.

Place the round baking form on the rack.

The surface has been treated with PerfectClean enamel.

Miele Oven Cleaner

Miele oven cleaner is suitable for removing stubborn soiling. It is not necessary to preheat the oven before use.

Speed Oven controls

The oven controls enable you to use the various cooking modes to bake, roast, broil and reheat.

It also allows you to access:

- the time of day display,
- a kitchen timer,
- a timer to automatically turn cooking programs on and off,
- settings that can be customized.

Oven safety features

System lock 🔒 for the oven

The system lock prevents the oven from being used unintentionally (see "System lock 🔒").

The system lock will remain activated even after a power failure.

Safety switch-off

A **mode without Microwave** can be started without specifying a cooking time. To prevent continuous use and avoid the risk of fire, the Speed Oven will turn itself off automatically after a time between 1 hour and 12 hours depending on the function and temperature chosen.

If a **Combi Mode** is followed in quick succession by another program using microwave power, the magnetron (which produces the microwaves) cannot be turned on again until approx. 10 seconds have elapsed. Therefore wait a short time before starting the second process.

Cooling fan

The cooling fan comes on automatically when a cooking program is started. The cooling fan mixes hot air from the oven cavity with cool room air before venting it out into the kitchen through vents located between the appliance door and the control panel.

The cooling fan will continue to run for a while after a cooking process to prevent moisture building up in the oven, on the control panel or on the surrounding cabinetry. It will turn itself off automatically after a while.

PerfectClean surfaces

The revolutionary PerfectClean finish is a smooth, non-stick surface that is exceptionally easy to clean.

Food and grime from baking or roasting are easily removed.

Do not use ceramic knives, as these will scratch the PerfectClean surface.

Follow the instructions in the "Cleaning and Care" section of this manual so the anti-stick and easy cleaning properties are retained.

The oven compartment and the rack have a PerfectClean finish.

Before using for the first time

⚠ The oven must not be operated until it has been properly installed within cabinetry.

The time of day can only be changed when the mode selector is in the • position.

■ Set the time of day.

Setting the time of day for the first time

The time of day is shown in 12 hour clock format.

After connection the oven to the electrical supply 12:00 will appear in the display and a ▲ will flash under ◷:

■ Use the rotary selector to enter the time of day.

■ Confirm with OK.

The time of day is now saved.

To change the time of day to a 24-hour format setting, choose 24h in the Settings P 4 menu (see "Settings").

During a power outage, the time of day will be saved for approx. 200 hours. If the power returns within this period of time the current time of day is displayed again. If the power is out for an extended period of time the time of day will need to be reset.

The time is day is turned off by default (see "Settings - P 1").
The display will appear dark when the oven is turned off. The time of day continues to run unseen in the background.

Heating the oven

New ovens may have a slight odor during their first use. Heating up the oven for at least one hour with nothing in it will eliminate the odor.

Ensure that the kitchen is well ventilated while the appliance is being heated up for the first time. Close doors to other rooms to prevent the smell spreading throughout the house.

- Remove any protective wrapping and sticky labels from the oven.
- Take all accessories out of the oven and clean them (see "Cleaning and care").
- Before heating the oven up, wipe the interior with a damp cloth to remove any dust or bits of packaging that may have accumulated in the oven cavity during storage and unpacking.
- Turn on the oven.
- Select Convection Bake.

The default temperature appears in the display and a ▲ flashes under 🌡:

- Use the rotary selector to set the maximum temperature possible.
- Confirm with OK.

The oven heating will turn on.

- Heat up the oven for at least an hour.

After at least an hour:

- Turn the mode selector to •.

After heating up for the first time

⚠ Danger of burns! Allow the oven to cool before cleaning.

- Select "Light" to turn on the oven light.
- Clean the oven interior with warm water and liquid dish soap, applied with a soft sponge or microfiber cloth.
- Dry all surfaces with a soft cloth.
- Turn the lighting and the oven off.

Leave the oven door open until the oven interior is completely dry.

Changing the time of day

The time of day can only be changed when the oven is turned on and the mode selector is at the • position.

- Select "Settings".
- Use the rotary selector to move the ▲ until it appears under ⏲.
- Confirm with OK.

The ▲ symbol will flash under ⏲.

- Use the rotary selector to enter the time of day.
- Confirm with OK.

The time of day is now saved.

During a power failure, the time of day will be saved for approx. 200 hours. When the power returns within this period of time the current time is displayed again.

After an extended power failure, the time of day will need to be reset.

Changing factory default settings

The appliance is supplied with a number of default settings (see the "Settings overview" chart).

A setting can be changed by altering its status.

The settings can only be changed when the oven is turned on and the mode selector is at the • position.

- Select "Settings".
- If necessary, use the rotary selector to move the ▲ symbol until it appears under Settings.

- Confirm with OK.

P 1 appears:

- If you would like to change another setting, use the rotary selector to select the appropriate number.
- Confirm with OK.

The setting is selected and the current status appears, e.g. *S 0*.

To change the status:

- Use the rotary selector to select the desired status.
- Confirm with OK.

The status is saved and the setting appears again.

- If you would like to change additional settings, repeat the process.
- If you do not wish to change the setting shown and would like to move to another setting select Back.
- If you have completed changing settings, select Settings.

The settings will remain in memory even in the event of a power failure.

Settings overview

Setting	Status	
P 1 **Time of day display**	S 0*	The time of day display is **turned off**. The display is dark when the oven is turned off. The time of day continues to run unseen in the background. If you have selected status S 0, the oven must be turned on before it can be used. This also applies for the Timer and Light. The oven also switches off automatically if no settings are selected within a certain period of time (approx. 30 minutes).
	S 1	The time of day display is **turned on** and is visible in the display.
P 2 **Buzzer volume**	S 0	The buzzer is **Off**.
	S 1 to S 21*	The buzzer is **On**. The volume can be changed. The corresponding buzzer will be heard when a status is selected.
P 3 **Keypad tone**	S 0	The keypad tone is **turned off.**
	S 1*	The keypad tone is **turned on.**
P 4 **Clock format**	24h	The time of day is shown in a **24-hour format**.
	12h *	The time of day is shown in the **12-hour format.** If you change the clock after 1 pm (13:00) from a 12-hour clock to a 24-hour clock, you will need to update the hours for the time of day accordingly.
P 5 **Temperature unit**	°C	The temperature is displayed in **Celsius**.
	°F *	The temperature is displayed in **Fahrenheit**.

* Factory default

Setting	Status	
P 6 **Display brightness**	S 1 to S 7, S 4*	Different levels of brightness can be selected for the display. S 1: Minimum brightness S 7: Maximum brightness
P 7 **Lighting**	S 0 *	The oven interior lighting is **on for 15 seconds** and then turns off automatically.
	S 1	The oven interior lighting is **permanently turned on**.
P 8 **Keep Warm**	S 0*	Keep warm is **deactivated**.
	S 1	Keep warm is **activated**. Keep warm is activated when the Microwave ≋ mode is selected with a minimum power of -- and a cooking time of at least 5 minutes. If the food is not removed from the oven at the end of the program, the Keep Warm function will start automatically after approx. 2 minutes. The food will be kept warm for approx. 15 minutes using a power level of LO. The function turns itself off if the door is opened.
P 9 **Minute +**		The Microwave mode starts at the maximum microwave power level by default and a duration of 1 minute. The microwave power level can be changed to LO, -, --, ---, or ----. The cooking duration can also be changed. The maximum possible cooking duration depends on the microwave power selected. LO and -: Max. 10 minutes -- to HI: Max. 5 minutes

* Factory default

Setting	Status	
P 10 **Popcorn**		The microwave starts at the maximum power level of ---- by default and a duration of 3 minutes. This setting meets the requirements for most microwave popcorn manufacturers. The cooking duration can be changed and set for a maximum of 4 minutes. The microwave power cannot be changed.
P 11 **Calibrate temperature**	0 * -3 to 3	The temperature can be modified, so that it is slightly higher or lower than shown. The higher the level, the higher the cooking temperature.
P 12 **Electrical Version**	208U	The Speed Oven is connected to a 208 V power supply.
	220U	The Speed Oven is connected to a 220 V power supply.
	240U	The Speed Oven is connected to a 240 V power supply.
P 13 **Demo Mode**	S 0*	Select S 0 and press OK for approx. 4 seconds. When - - - - appears in the display the demo mode is **deactivated**.
	S 1	Select S 1 and press OK for approx. 4 seconds. When NES_ appears in the display the demo mode is **active**. The Speed Oven can be operated, but the oven heating and the microwave modes do not work. For personal use you do not need this setting.

* Factory default

System lock 🔒

The system lock 🔒 prevents the oven from being used unintentionally.

The system lock is set of off by default. This can be changed by setting the status S:

– S 0 = Off

– S 1 = On

The status of the system lock can only be altered when the oven is turned on and the mode selector is at •.

To activate the system lock

■ Select "Settings".

■ Use the rotary selector to move the ▲ until it appears under 🔒.

■ Confirm with OK.

The currently set Status S 0 appears:

■ Use the rotary selector to set Status S 1.

■ Confirm with OK.

■ Select "Settings".

The current time of day appears.

■ Turn the oven off.

The system lock is On.

When the appliance is turned on again, the 🔒 symbol will appear in the display to remind you that the system lock has been activated.

The system lock will remain activated even after a power failure.

Deactivating the system lock for a cooking process

■ Turn on the oven.

The 🔒 and ▲ symbols will appear along with the current time of day:

■ Press and hold OK until 🔒 goes out.

The oven can now be used.

Deactivating the system lock

■ Turn on the oven.

■ Press and hold OK until 🔒 goes out.

■ Select "Settings".

■ Use the rotary selector to move the ▲ until it appears under 🔒.

■ Confirm with OK.

The currently set status S 1 appears.

■ Use the rotary selector to set Status S 0.

■ Confirm with OK.

■ Select "Settings".

The system lock is Off.

The 🔒 symbol disappears.

Timer

The timer can be used to time any activity in the kitchen, e.g. boiling eggs.

The timer can also be used at the same time as a cooking program if a start and finish time have been set, e.g. a reminder to stir the dish or add seasoning.

A maximum time of 99 minutes and 55 seconds can be set for the timer.

Setting the timer

Example: Boiling eggs and setting the timer for 6 minutes and 20 seconds

■ Select "Timer".

If you have selected the "P I - S O" setting for the time of day display, you will need to turn the oven on before you can set a kitchen timer time.

00:00 will appear in the display with ▲ flashing under the Timer symbol:

■ Use the rotary selector to set the kitchen timer time desired.

■ Confirm with OK.

The timer settings are saved and will count down in seconds.

The Timer symbol indicates that the timer has been set.

At the end of the timer

– the Timer symbol flashes,

– the time starts counting upwards,

– a buzzer will sound if turned on (see "Settings - P 2").

■ Select "Settings".

The buzzer will turn off and the symbols in the display will go out.

Resetting the timer

■ Select "Timer".

The time previously set appears.

■ Use the rotary selector to change the kitchen timer time.

■ Confirm with OK.

The changed time is saved and will count down in seconds.

Canceling the timer

■ Select "Timer".

■ Use the rotary selector to reduce the kitchen timer time to 00:00.

■ Confirm with OK.

The timer has been canceled.

Guide to the modes

The oven has a wide range of modes for preparing a variety of foods.

Due to country-specific preferences for preparation of food, default temperatures and temperature ranges in °F and °C do not correspond. The temperature values have been defined as given in the chart.

Solo Modes

Mode	Default temperature	Temperature range
Broil For grilling meats and browning. The entire Browning/Broiling element will glow red to produce the required heat. Provides great browning and searing results. The temperature cannot be altered in this mode.	–	–
Defrost For gently defrosting of frozen food. The fan is used to gently circulate the air inside the oven cavity.	–	–
Rapid PreHeat This mode allows the oven to be heated to the desired temperature quickly. Once the desired temperature has been reached the oven mode must be selected.	350 °F (160 °C)	200–475 °F (100–250 °C)
Convection Bake Use this mode for baking and roasting on several levels at the same time.	350 °F (160 °C)	75–475 °F (30–250 °C)
Convection Broil This mode distributes hot air from the Browning/ Broiling element over the food using the fan. This allows for a lower temperature to be used then when using Broil. Ideal for broiling thicker cuts of meat (e.g. chicken, roulades).	350 °F (200 °C)	200–500 °F (100–220 °C)

Mode	Default temperature	Temperature range
Auto Roast For a premium result, the meat is seared at a high temperature keeping meat tender and juicy.	350 °F (160 °C)	200–450 °F (100–230 °C)
Gentle Bake A combination of different heating elements ensures excellent baked good, gratins and lasagna.	350 °F (190 °C)	200–475 °F (100–230 °C)

Microwave (Solo)

Mode	Default power level	Power level range
Microwave This mode is used to rapidly defrost, reheat and cook food.	HI	LO–HI

Combination modes

With microwave combination programs, the heating element and the magnetron turn on and off alternating one after the other. The heating element browns the food and the magnetron helps it cook quickly. A maximum microwave power level of *HI* can be used with microwave combination programs.

Mode	Default temperature	Temperature range
Combi Bake For rapid heating and cooking of food, while browning at the same time. Microwaves will speed up your cooking process without sacrificing the quality of food. When baking do not set the microwave power level higher than *LO*.	320°F (160°C)	85-425°F (30-220°C)
Combi Auto Roast For roasting at high temperatures and slow cooking at low temperatures. The Microwaves will speed up your cooking process without sacrificing the quality of food. During the searing phase the oven heats up to 450°F (230°C) to seal the meat. Once this temperature has been reached, the oven temperature automatically drops back down to the pre-set cooking temperature for continued roasting. The maximum adjustable microwave power level is *HI*.	320°F (160°C)	212-395°F (100-200°C)

How it works

The Speed Oven contains a high-frequency tube called a magnetron. It converts electrical energy into microwaves. The microwaves are then distributed evenly throughout the metal sides of the oven interior to reach the food from all sides.

In order for microwaves to reach the food, they must be able to penetrate the cooking container being used. Microwaves can penetrate porcelain, glass, cardboard and plastics, but not metal. Do not, therefore, use dishes made of metal, or which contain metal, for example in the form of gold or silver trim. The metal reflects the microwaves and this could cause sparking. The microwaves cannot be absorbed.

Microwaves pass through a suitable container and find their way directly into the food. All food contains moisture molecules which, when subjected to microwave energy, start to oscillate 2.5 billion times a second. The friction caused by this vibration creates heat, which first starts developing around the outside of the food and then slowly penetrates towards the center. The moisture, fat and sugar content of food will affect the speed at which it is cooked.

Advantages

- Food can generally be cooked with little liquid or oil.
- Defrosting, heating and cooking is faster than using a conventional oven.
- Nutrients, such as vitamins and minerals, are generally retained.
- The color, texture and taste of food are not impaired.

Microwaves stop being produced when the program is interrupted or the door is open. While in operation the closed, sealed door prevents microwaves from escaping the appliance.

Microwave power level

The following power levels can be selected:
LO, -, --, ---, ----, HI.

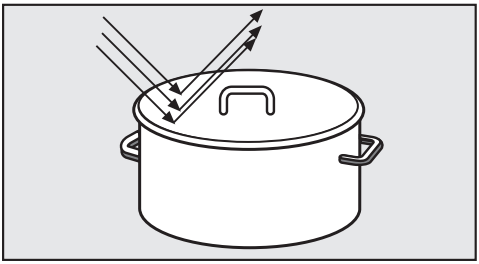

Microwaves are reflected by metal.

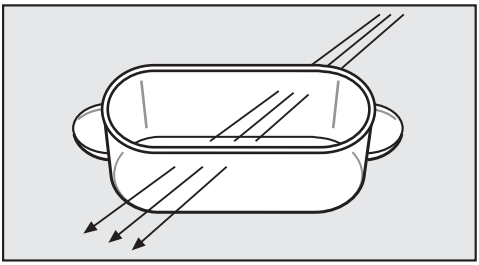

They pass through glass, porcelain, plastic and cardboard.

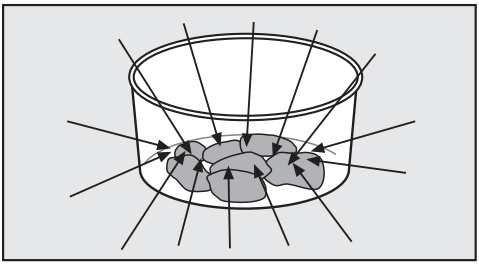

They are absorbed by food.

Non-microwave safe dishes can suffer damage or cause damage to the oven when using the the Microwave (Solo) [≋] and Combination modes with Microwave. Risk of Fire!

The material and shape of containers used affect cooking results and times. Circular and oval containers work best. The food will heat more evenly than in a square container.

Containers suitable for microwave use

Glassware

Heat-resistant glass or ceramic glass are ideal for use with microwave power.

Exception: Do not use crystal glass as it contains lead which can crack or shatter in a microwave.

Porcelain

Porcelain is a suitable material.

Exception: Do not use porcelain with gold, silver or cobalt blue edging or items with hollow knobs or handles, as insufficient ventilation may cause a build-up of pressure.

Earthenware

Decorated earthenware is only suitable if the decoration is beneath an all-over glaze.

Danger of burning! Wear pot holders when removing earthenware dishes from the Speed Oven.

Plastics

Plastic containers and plastic disposable containers may only be used with Microwave (Solo) ≋ if they have been declared as suitable for microwave use by the manufacturer. To protect the environment, it is best to avoid using single-use containers.

Do not leave the Speed Oven unattended when reheating or cooking food in disposable containers made of plastic, paper or other flammable materials.

Plastic cookware must be heat-resistant up to at least 230°F (110°C). Otherwise the cookware will deform and possibly come in contact with the food.

Only use plastic dishes in the Microwave ≋ and combination modes.

– Plastic microwave containers

Readily available from retail stores.

– Styrofoam containers

Disposable containers, such as trays made from styrofoam, can only be used for very short, timed warming and reheating of food.

– Plastic cooking bags

Plastic cooking bags can be used for cooking and reheating food.
They should be pierced beforehand so that steam can escape. This prevents a build-up of steam and reduces the rish of the bag bursting.

There are also cooking bags that do not need to be pierced. Following the instructions listed on the packaging.

– Roasting bags

Follow the manufacturer's instructions.

⚠ Fire hazard!
Do not use metal clips, plastic clips containing metal parts, or paper ties containing wire. There is a danger that they will ignite when heated.

– Melamine

Plastic tableware made from melamine is not suitable for use in this oven. Melamine absorbs microwave energy and becomes very hot. Before purchasing plasticware be sure that is is microwave-safe.

Unsuitable containers for microwave use

⚠ Dishes with hollow knobs or handles are not suitable for use with microwave modes. Moisture which has gathered in the hollow recesses can cause pressure to build up and the item can explode.

Metal

Metal reflects microwaves and obstructs the cooking process.

Do not use metal containers, aluminum, foil, metal cutlery and china with metallic decoration such as gold rims or cobalt blue with Microwave combination modes.

Do not use containers where the foil lid has not been completely removed as small pieces of foil can cause sparking.

Exceptions:

The rack **supplied** is only suitable for cooking in Combination modes and modes that do not use microwave. It is **not suitable** for cooking in the Microwave (Solo) ≋ mode.
The rack should be used on a shelf level. Do not place it on the floor of the oven.

- Metal bakeware can be used with Microwave combination modes.
- Ready-meals in aluminum foil trays can be defrosted and reheated using microwave power as long as the lid is removed.

When using foil trays there is a risk of arcing or sparks occurring in the oven. For this reason, place the foil tray on the glass tray and not on the rack.

The foil tray must be at least 3/4" (2 cm) away from the oven walls. It must not touch them.

However, as food is only heated from the top, it is better to remove the food from the aluminum foil container and transfer it to a dish suitable for use in a microwave oven. The heat distribution will be more even.

– Aluminum foil pieces

For even defrosting and to avoid overcooking unevenly shaped cuts of meat, poultry or fish, small pieces of aluminum foil may be used to mask thin pieces for the last few minutes of the program.

Make sure that the aluminum foil is at least 3/4" (2 cm) from the oven walls at all times. It must not touch the walls.

– Metal meat skewers or clamps

These should only be used if they are very small in comparison to the size of the cut of meat.

Glazes and colors

Some glazes and colors contain metal and are therefore unsuitable for microwave modes.

Wood

Wooden dishes are not suitable. Moisture contained in the wood evaporates when exposed to microwave energy, causing the wood to dry and crack.

Testing dishes for their suitability

If in doubt as to whether glass, earthenware or porcelain plates or dishes are suitable for use with microwave energy, a simple test can be performed:

- Insert the glass tray on shelf level 1 and place the empty item you wish to test on the glass tray. Fill a suitable glass with water and also place this on the glass tray.
- Close the door.
- Select Microwave ≋.
- Set the highest microwave power (*HI*) and a duration of 30 seconds.
- Confirm with OK and start the program.

If a cracking noise is heard accompanied by sparks during the test, turn the appliance off immediately. Any cookware which causes this reaction is unsuitable for use with microwave power. If in doubt, contact the cookware manufacturer.

This test cannot be used to check whether hollow knobs or handles are properly ventilated.

Placing the dish in the Speed Oven

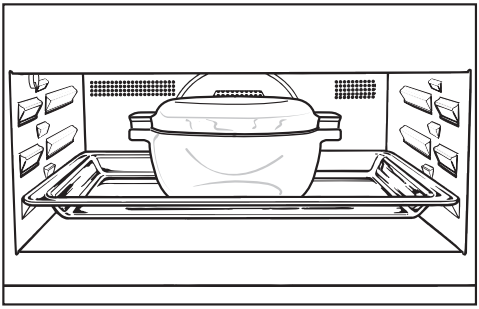

- Insert the glass tray on shelf level 1.
- The dish containing the food should always be placed in the middle of the glass tray.

Placing the food directly on the floor of the oven would give unsatisfactory and uneven results as the microwaves would not be able to reach the food from below.

Lid

The lid offers the following advantages:

- Prevents too much steam escaping, especially when cooking foods which need longer to cook, such as potatoes.
- Speeds up the cooking process.
- Prevents food from drying out.
- Helps keep the oven interior clean.

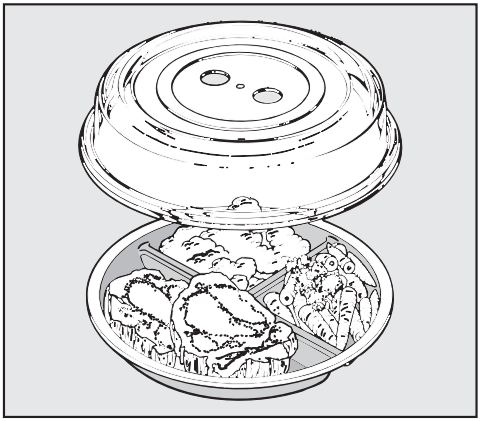

- When using Microwave (Solo) [≋], always cover the food with a lid or cover made of microwave safe glass or plastic.

These covers are available at retail stores.

Alternatively, use plastic wrap recommended for use in a microwave oven (pierce as instructed by the manufacturer). Heat can cause normal plastic wrap to distort and fuse with the food.

⚠ The cover can only withstand temperatures up to 230°F (110°C). Higher temperatures (e.g. those used for Broil and Convection Bake) can cause the plastic to distort and fuse with the food. The cover should only be used with Microwave (Solo) ≋.

The cover should not form a seal with the container. If the cover is used with a container which only has a narrow diameter, there might not be enough room for condensation to escape through the holes in the top. The cover could get too hot and could start to melt.

■ **Do not** use the cover if:

– cooking breaded food,

– cooking food which requires a crisp finish,

– cooking food with a Combi mode.

⚠ Otherwise pressure can build up, causing the container to explode, posing a severe risk of injury.

Do not cook or reheat food or liquids in sealed containers, jars or bottles. Otherwise pressure will build up which can cause the bottle or container to explode. Risk of injury.

Energy saving tips

- Remove any accessories from the oven that you do not require for cooking.
- If possible, do not open the door during a program. If the door is opened during a program that is not using microwave power, the heat in the oven automatically turns off. The fan continues to run. As soon as the door is closed again, the program will continue.
- If a temperature range is given, it is best to select the lower temperature and check the food after the shortest cooking time given.
- Convection Broil can be used for a wide variety of foods. Lower temperatures can be used than with other Broil modes which use the maximum temperature setting.
- The factory default setting "P 1 – S 0" for the time of day display will consume the least amount of energy.
- With the factory default setting "P 7 – S 0" the oven interior lighting turns off automatically after 15 seconds. It can be turned on again at any time by touching ☼.
- When cooking with temperatures above 285°F (140°C) and cooking durations longer than 30 minutes, turn the temperature selector down approx. 5 minutes before the end of cooking. The oven heating elements will turn off and the residual heat will finish cooking the food.
- The oven turns off automatically if a button is not pressed to save power. The amount of time before the oven turns off depends on the selected settings, e.g. oven mode, temperature, cooking duration, etc.

Quick Guide

- Turn on the oven.
- Place the food in the oven.
- Using the mode selector select the required oven mode.

The default temperature is displayed:

The oven heating, lighting and cooling fan will turn on.

- Use the rotary selector to change the temperature if necessary.

The current temperature and temperature indicator light appear after a short time.

You will see the temperature rising in the display. A buzzer will sound when the oven temperature is reached if this option is selected (see "Settings - P 2").

After the cooking process:

- Turn the mode selector to •.
- Take the food out of the oven.
- Turn the oven off.

Cooling fan

After the cooking process the cooling fan will continue to run for a while after a program is complete to prevent moisture from building up in the oven, on the control panel or surrounding cabinetry.

When the temperature in the oven has fallen sufficiently the cooling fan will turn off automatically.

Changing the temperature

Example: You have selected Convection Bake and 350°F (175°C) and you can see the temperature rising in this display.

You would like to reduce the set temperature to 310°F (155 °C).

- Use the rotary selector to reduce the temperature.

The ▲ symbol will flash under and the temperature is altered in 5°F (5°C) increments.

The altered target temperature is saved. The actual temperature is displayed.

Select "Settings" to toggle between displaying the actual temperature and the set temperature.

Temperature indicator

The temperature indicator light turns on whenever the oven heating is turned on.

Once the set temperature has been reached:

- a buzzer will sound if turned on (see "Settings - P 2"),
- the temperature indicator light will go out, and
- the oven heating will turn off.

The temperature regulator ensures that the oven heating and temperature indicator light turn back on when the oven temperature falls below the level set.

Rapid PreHeat

With Rapid PreHeat the preheating phase can be shortened.

Do not use Rapid PreHeat when baking pizza or delicate mixtures.
The tops of these items will brown too quickly.

- Select Rapid PreHeat.
- Select a temperature.
- Set the desired oven mode when the temperature indicator light goes out for the first time.
- Place the food in the oven.

Turning a cooking program On / Off automatically

You can set a cooking program to turn on or off automatically. First the mode and cooking temperature must be selected.

The maximum duration that can be set for a cooking program is 12 hours.

It It is recommended to use the automatic On/Off feature when roasting. Do not delay the start of the program for too long when baking. Cake mixtures and doughs will dry out, and the leavening agents will lose their effectiveness.

Setting the duration

Example: Baking a cake for 1 hour 5 minutes

- Place the food in the oven.
- Select the required oven mode and temperature.

The oven heating, lighting and cooling fan will turn on.

- Select "Settings".

- If necessary, use the rotary selector to move the ▲ symbol until it appears under ⏱.
- Confirm with OK.

00:00 h will appear in the display along with a ▲ flashing under ⏱.

- Use the rotary selector to select the cooking duration (*01:05*).
- Confirm with OK.

The cooking duration is saved and then counts down in minutes, with the last minute counting down in seconds.

The ⏱ symbol indicates that a cooking duration has been set.

Setting a cooking duration and finish time

Example: The current time is 11:15, you would like a dish with a cooking duration of 90 minutes to be ready at 1:30.

- Place the food in the oven.
- Select the required oven mode and temperature.

The oven heating, lighting and cooling fan will turn on.

Set the cooking duration:

- Select "Settings".
- If necessary, use the rotary selector to move the ▲ symbol until it appears under ⏱.
- Confirm with OK.

00:00 h will appear in the display along with a ▲ flashing under ⏱.

- Use the rotary selector to select the cooking duration (*01:30*).
- Confirm with OK.

The cooking duration ⏱ is saved and then counts down in minutes:

Set the finish time:

- Use the rotary selector to move the ▲ until it appears under ⏱.

-:- - appears:

- Confirm with OK.

12:45 will appear in the display (current time of day + cooking duration = 11:15 + 1:30).

- Use the rotary selector to enter the finish time (1:30).
- Confirm with OK.

The finish time ⏱ is now saved.

The oven heating, lighting and cooling fan will turn off.

As soon as the start time (1:30 pm - 1:30 = 12:00) has been reached, the oven heating, lighting and cooling fan will turn on.

At the end of the cooking duration

- 0:00 appears in the display,
- ⏱ flashes,
- the oven heating and lighting will turn off,
- the cooling fan will continue to run, and
- a buzzer will sound if turned on (see "Settings - P 2").

- Turn the mode selector to •.
- Take the food out of the oven.
- Turn the oven off.

If the dish is not cooked to your liking, you can extend the cooking duration by entering a new duration.

Changing the cooking duration

- Select "Settings".
- If necessary, use the rotary selector to move the ▲ symbol until it appears under ⏲.

The cooking time remaining appears in the display.

- Confirm with OK.
- Use the rotary selector to adjust the cooking duration.
- Confirm with OK.

The changed cooking duration is now saved.

Deleting a cooking duration

- Select "Settings".
- If necessary, use the rotary selector to move the ▲ symbol until it appears under ⏲.
- Confirm with OK.

The ▲ symbol will flash under ⏲.

- Use the rotary selector to select the cooking duration (00:00).
- Confirm with OK.

The cooking duration and finish time are deleted.

- Select "Settings".

The current temperature will appear. The oven heating remains turned on.

To complete the cooking program:

- Turn the mode selector to •.
- Take the food out of the oven.
- Turn the oven off.

If you turn the mode selector to • or turn the oven off, the settings for the cooking duration and the finish time will be deleted.

Deleting a finish time

- Select "Settings".
- If necessary, use the rotary selector to move the ▲ symbol until it appears under ⏱.
- Confirm with OK.

The ▲ symbol will flash under ⏱.

- Use the rotary selector to enter the finish time (1:30).
- Confirm with OK.

The finish time is now deleted.

Quick Guide

- Turn the oven on.
- Put the food in the oven.
- Turn the mode selector to Microwave ≋.

The suggested power level *HI* appears and the triangle ▲ flashes under ≋:

The following power levels can be selected: *LO*, -, --, ---, ----, *HI*.

- Turn the mode selector to set the microwave power level, if necessary.
- Confirm with OK.

00:00 min appears and the triangle ▲ flashes under ⏱:

- Use the rotary selector to select the cooking duration (e.g., *01:30* minutes).

The maximum settable cooking duration depends on the selected microwave power level.

- Confirm with OK.

01:30 min appears and the triangle ▲ flashes under Start:

- Confirm with OK.

The magnetron, lighting and cooling fan will come on and the cooking program will start.

At the end of the cooking duration

– *0:00* appears in the display,

– ⏱ flashes,

– the cooling fan will continue to run,

– a buzzer will sound if turned on (see "Settings - *P 2*").

- Turn the mode selector to •.
- Take the food out of the oven.
- Turn the oven off.

If the dish is not cooked to your liking, you can extend the cooking duration by entering a new duration.

Cooling fan

After the cooking process the cooling fan will continue to run for a while after a program is complete to prevent moisture from building up in the oven, on the control panel or surrounding cabinetry.

The cooling fan will turn off after a set time.

Changing the microwave power

- Select "Settings".
- If necessary, use the rotary selector to move the ▲ symbol until it appears under ≋.

The microwave power level will appear.

- Confirm with OK.

The ▲ symbol will flash under ≋.

- Use the rotary selector to adjust the power level.
- Confirm with OK.
- Select "Settings".

The adjusted power level is now saved and will appear in the display.

To track the cooking duration in the display:

- Select "Settings".
- If necessary, use the rotary selector to move the ▲ symbol until it appears under ⏱.
- Select "Settings".

The cooking duration remaining will appear in the display.

Changing the cooking time

The duration can be seen counting down in the display.

- Use the rotary selector to adjust the cooking duration.
- Confirm with OK.

The adjusted cooking duration appears in the display. The ▲ symbol flashes under Start:

- Confirm with OK.

The program will restart using the new duration.

Turning a cooking program On / Off automatically

You can set a cooking program to turn on or off automatically. First the mode and cooking duration must be selected.

Setting a finish time

In addition to setting a start time, you can set a finish time.

- Set the microwave power level and cooking duration.
- After selecting the cooking duration select "Settings".
- If necessary, use the rotary selector to move the ▲ symbol until it appears under ⏱.

-:- - appears:

- Confirm with OK.

The finish time will appear in the display (current time of day + duration).

- If necessary, set the finish time using the rotary selector.
- Confirm with OK.

The finish time ⏱ is now saved.

The program will begin at the set start time.

Deleting a finish time

- Select "Settings."
- If necessary, use the rotary selector to move the triangle ▲ until it appears under ⏱.
- Confirm with OK.

The triangle ▲ flashes under ⏱.

- Turn the rotary selector counter-clockwise until - -:- - appears in the display.
- Confirm with OK.
- Select "Settings."

The duration will appear and the triangle ▲ flashes under Start.

- Confirm with OK.

The finish time is now deleted.

The program will start using the duration set.

Quick Guide

Microwave Combi modes use microwave power with another cooking mode (e.g. Convection Bake, Auto Roast). This combination enables shorter cooking durations.

- Turn the oven on.
- Put the food in the oven.
- Using the mode selector, select the required oven mode.

The oven lighting does not turn on.

The oven suggests a power level of *HI* and the triangle ▲ flashes under ≋:

The following microwave power levels can be selected: *LO* and *HI*.

- Turn the mode selector to set the microwave power level, if necessary.
- Confirm with OK.

The suggested temperature appears in the display and the triangle ▲ flashes under 🌡:

- If necessary, adjust the temperature within the given range using the rotary selector.

00:00 min appears and the triangle ▲ flashes under ⏱:

A maximum duration of 2:00 hours can be set.

- Use the rotary selector to set the cooking duration (e.g., *01:45 h*).
- Confirm with OK.

01:45 h appears and the triangle ▲ flashes under Start:

- Confirm with OK.

The cooking program will start. The oven heating and cooling fan will turn on.

You will see the temperature rising in the display. A buzzer will sound when the oven temperature is reached if this option is selected (see "Settings - *P 2*").

The remaining time appears on the display.

The microwave will switch on once the target temperature is reached.

At the end of the cooking duration

– 0:00 appears in the display,

– ⏲ flashes,

– the oven heating turns off automatically,

– the cooling fan will continue to run,

– a buzzer will sound if turned on (see "Settings - P 2").

■ Turn the mode selector to •.

■ Take the food out of the oven.

■ Turn the oven off.

If the dish is not cooked to your liking, you can extend the cooking duration by entering a new duration.

Cooling fan

After the cooking process the cooling fan will continue to run for a while after a program is complete to prevent moisture from building up in the oven, on the control panel or surrounding cabinetry.

When the temperature in the oven has fallen sufficiently the cooling fan will turn off automatically.

Changing the cooking time

■ Select "Settings."

■ If necessary, use the rotary selector to move the triangle ▲ until it appears under ⏲.

The cooking time remaining appears in the display.

■ Confirm with OK.

The triangle ▲ flashes under ⏲.

■ Use the rotary selector to adjust the cooking duration.

■ Confirm with OK.

■ Select "Settings."

The adjusted cooking duration appears in the display and the triangle ▲ flashes under Start:

■ Confirm with OK.

The program will restart using the new duration.

Changing the microwave power

- Select "Settings".
- If necessary, use the rotary selector to move the ▲ symbol until it appears under ≋.

The microwave power level will appear.

- Confirm with OK.

The ▲ symbol will flash under ≋.

- Use the rotary selector to adjust the power level.
- Confirm with OK.
- Select "Settings".

The adjusted power level is now saved and will appear in the display.

To track the cooking duration in the display:

- Select "Settings".
- If necessary, use the rotary selector to move the ▲ symbol until it appears under .
- Select "Settings".

The cooking duration remaining will appear in the display.

Changing the temperature

- Use the rotary selector to change the temperature if necessary (see "Modes without microwave - Changing the temperature").

Turning a cooking program On / Off automatically

You can automatically turn a cooking process on and off (see "Microwave (Solo) ≋ - Turning a cooking process on and off).

Minute +

With the Minute + button, the microwave starts with a set microwave power level and cooking time, e.g. for heating liquids.

The maximum default power level of *HI* and a cooking duration of 1 minute are preset.

Tip: You can alter the power level and the duration. The maximum duration will depend on the microwave power level selected (see "Settings – *P 9*").

This mode can only be used when no other cooking programs are in use and the mode selector is in the • position.

■ Select "Minute +", and the cooking process will start.
Touching it repeatedly will increase the cooking time.

The time remaining appears in the display.

You can cancel the program at any time by selecting ⏻.

At the end of the program

– a buzzer will sound if turned on (see "Settings - *P 2*").

– the oven will turn itself off automatically.

With the "Popcorn" button, the microwave starts with a set power level and cooking time.

A microwave power level of ---- and a cooking time of 3 minutes are preset. This is suitable for most brands of microwave popcorn.

Tip: The duration can be changed up to a maximum of 4 minutes. The microwave power level cannot be changed (see "Settings – P 10").

This mode can only be used when no other cooking programs are in use and the mode selector is in the • position.

■ Touch "Popcorn" to start the program.

The time remaining appears in the display.

You can cancel the program at any time by selecting ⓘ.

Do not leave the oven unattended during this program and follow the manufacturers instructions.

At the end of the program

– a buzzer will sound if turned on (see "Settings - P 2").

– the oven will turn itself off automatically.

Eating food which has been cooked correctly is important for good health.
Only bake cakes, pizza, french fries, etc. until they are golden brown. Do not overcook them.

Operating modes

Convection Bake

Recommended for cookies, quick batters, choux pastry, phyllo, and strudel.

Combi Bake

Recommended for baked goods that require a longer baking time, such as doughs.

The baking time is shortened.

A maximum power level of LO must not be exceeded throughout the entire baking time.

Bakeware

The bakeware used depends on the oven mode chosen and how the food is prepared.

- Convection Bake
  Bakeware made of any heat-resistant material is suitable. Light-colored, thin, non-reflective metal baking pans can be used, but results may not be as good as with dark non-reflective bakeware.
- Combi Bake
  Only use oven-safe dishware suitable for microwave use (see "Suitable containers for microwave use"), such as oven-safe glass or ceramic dishes as these allow microwaves through them.
  Metal containers reflect microwaves so food will only cook from above. Cooking durations would therefore be longer and metal tins could also cause sparking.Place the dish on the glass tray such that it cannot touch the oven walls. If the dish being used causes sparking, do not use it for combination cooking programs again.

Parchment paper

Place french fries, croquettes and similar types of food on paper.

Temperature

Select the suggested temperature if possible.

Choosing a baking temperature higher than those recommended may reduce the cooking time, but will lead to uneven browning, and unsatisfactory cooking results.

Baking duration

Check if the food is cooked at the end of the shortest duration quoted. To check if a cake is ready insert a wooden skewer or toothpick into the center, it should come out clean.

Shelf levels

– **Convection Bake**
  Cakes in bakeware: Level 1 from the bottom
  Flat baked goods (e.g. cookies): Level 2 from the bottom
  When cooking on 2 levels at one time:
  Levels 1+3 from the bottom or levels 2+3

– **Combi Bake**
  Insert the glass tray on shelf level 1 and place the bakeware on it.

Tips

– Setting the cooking duration. When baking, the oven should not be set to start after an extended period of time. Otherwise the cake mixture or dough will dry out, and the raising agents will lose their effectiveness.

– Place cakes in rectangular bakeware on the rack with the longer side across the width of the oven for optimum heat distribution and even results.

Always observe the USDA guidelines for food safety.

Operating modes

Convection Bake , Auto Roast

For roasting meat, fish and poultry dishes in which a browned finish is desired.

Combi Bake ,
Combi Auto Roast

The program duration is shorter with these modes.

Set the microwave to the following power levels for the entire roasting time:

– For meat and fish: *HI*,

– For poultry: *LO*.

This combination program is **not** suitable for cooking roast beef or tenderloins. The center would be too well cooked before the exterior is browned.

Cookware

Please take into account the material of your bakeware in your choice of oven mode:

– Convection Bake / Auto Roast :
Oven dishes, ovenproof ceramic dishes and glass dishes.

Make sure that the pot and lid have heat-resistant handles.

– Combi Bake /
Combi Auto Roast :
Dishes must be suitable for use in a microwave oven and must not have metal lids (see "Containers suitable for microwave use").

Roasting in a closed pan

- Season the meat and place it in the roasting dish. Dot with butter or margarine or brush with oil if necessary. For large lean cuts of meat (4–6 lbs.) and fatty poultry, add about 1/2 cup of water to the dish.
- When using a roasting bag, follow the manufacturer's instructions.

Roasting on the rack

Add a little fat or oil to very lean meat or wrap with bacon.

Do not add too much liquid during cooking as this will hinder the browning process.

Temperature

Select the suggested temperature if possible.

If higher temperatures are used, the meat will brown on the outside, but will not be properly cooked through.

Shelf levels

- Convection Bake / Auto Roast:
  Rack with meat on it on shelf level 1
- Combi Bake / Combi Auto Roast:
  Rack or glass tray with meat on it on shelf level 1

Tips

- Resting time: At the end of the program, take the roast out of the oven, cover with aluminum foil and let stand for about 10 minutes. This helps retain the juices when the meat is sliced.
- The larger the cut of meat, the lower the temperature setting should be.
- Use a roast probe for accurate cooking temperatures and best results.

⚠ Danger of burns!
Broil with the oven door closed. If you broil with the door open the hot air will escape from the oven before it has been cooled by the cooling fan.
The controls will get hot.

Oven modes

Maxi Broil

For broiling thin cuts of meat and browning.

The entire Browning / Broiling element will get hot and glow red.

Convection Broil

For broiling thicker items, e.g. poultry or London broil.

The Browning/Broiling element and the fan switch on in alternating phases.

Cooking accessories

- Broiling on the wire oven rack.
- Brush the rack with oil, and place the food on it. It is best to broil food of a similar thickness at the same time so that the broiling duration for each item does not vary too greatly.

Temperature

– Maxi Broil
A fixed temperature is used for broiling, i.e., the temperature is automatically set by the oven and cannot be changed.

– Convection Broil
As a general rule, select the suggested temperature if possible. If higher temperatures are used, the meat will brown on the outside but will not be properly cooked through.Thin cuts can generally be broiled at 400°F (220°C), thicker cuts at 355-400°F (180-200°C).

Preheating

Always preheat the oven for about 5 minutes with the door closed before Broiling.

Do not set a microwave power level during pre-heating.

Shelf levels

– Broil
Use shelf level 2 or 3 depending on the thickness of the food.

– Convection Broil
Use shelf level 1 or 2 depending on the thickness of the food.

Testing doneness

Always observe USDA food safety guidelines.

Preparing food for broiling

Rinse the meat under cold water and pat dry. Do not season the meat with salt before broiling, this will draw out the juices.

Brush the meat with oil, if necessary. Do not use other types of fat as they can easily burn and cause smoke.

Clean fish as usual. To enhance the flavor, salt or lemon can be added.

Broiling

- PreHeat the browning/broiling element for approx. 5 minutes with the door closed.

Do not set a microwave power level during pre-heating.

- Place the food on the wire rack.
- Select the required oven mode and the temperature (only with Convection Broil).

⚠ Burn hazard!
When the oven is hot use pot holders to insert, remove or turn the food, or when adjusting the oven shelves, etc.

- Place the food on the appropriate shelf level (see the "Broiling chart").
- Close the door.

Microwave: Defrosting/Reheating/Cooking

Always observe the USDA guidelines for food safety.

	Operating mode	≋ / 🌡	Suitable for:
Defrost	≋	LO	Very delicate foods such as cream, butter, filled sponge cakes, cheese
		LO	All other types of food
Reheat	≋	--	Food for infants and children
		---	All types of food; frozen meals that do not need browning
		----	
		HI	Drinks
Cooking	≋	---- Heating-up	Casseroles, puddings, frozen foods that do not need browning
		-- Continued cooking	
		LO Simmering	
	Select a "Microwave Combi" mode if you want to shorten cooking durations and have a crisp finish to the dish.		
	≋	HI + 320-355°F / 160–180°C	Sear using a high temperature to start with, then continue cooking with a lower temperature.
	≋	HI + 300-340°F / 150–170 °C	Ready-meals which need to be browned, e.g., gratins

≋ Microwave / Microwave power level / ≋ Combi Auto Roast / ≋ Combi Bake / 🌡 Temperature

The duration required depends largely on the nature of the food, the amount and its initial temperature. Food that has been refrigerated, for example, takes longer to reheat than food at room temperature. Please refer to the relevant charts.

Before defrosting, reheating and cooking

- Place food (frozen or unfrozen) in a dish that is suitable for microwave use, and cover it.
- Place the dish in the middle of the glass tray on shelf level 1.

With Microwave Combi modes

- Use only microwave-safe and heat-resistant cookware.

A lid is not usually required.

Never use a lid with Combi Auto Roast as the food will not brown.

- Place the glass tray on shelf level 2.

Place pre-made meals in aluminum containers directly on the glass tray.

During the defrosting, reheating and cooking process

- Turn or stir the food several times. Stir the food from the outside towards the middle, as food heats more quickly from the outside.

After defrosting, reheating and cooking

Compensating times are resting periods in which the temperature is uniformly distributed in the food.

- Allow the food to stand at room temperature for a few minutes to enable the heat to spread evenly throughout the food.

⚠ Burn hazard!
After reheating food, especially food for babies and small children, stir the food or shake the container and check that the temperature does not pose any danger. Double check after it has been left to stand.

⚠ Danger of burns!
Be careful when removing dishes from the appliance. Although heat is not normally produced in the container itself by the microwaves (apart from stoneware), heat transfer from the food to the container may be considerable, making the container itself hot.
Use pot holders when removing dishes.

- Always ensure that food is sufficiently cooked or reheated.
- If you are unsure whether a sufficiently high temperature has been reached or whether the food is sufficiently cooked, continue reheating a little longer.
- Always follow proper food safety guidelines.

Tips on reheating

⚠ Danger of burns! Food for infants and children must not be too hot.

Heat food for babies and children at power level -- for only 30–60 seconds.

Otherwise pressure can build up, causing the container to explode, posing a severe risk of injury.

Do not cook or reheat food or liquids in sealed containers, jars or bottles. Otherwise pressure will build up which can cause the bottle or container to explode. Risk of injury.

Eggs may burst.

Never reheat hard boiled eggs using Microwave [≋], even without the shell. The eggs can explode.

When boiling and in particular when reheating liquids using microwave power, the boiling point of the liquid may be reached without the production of typical bubbles. The liquid does not boil evenly throughout.

This so-called "boiling delay" can cause a sudden build up of bubbles when the container is removed from the oven or shaken. This can lead to the liquid boiling over suddenly and explosively. The formation of bubbles can be so strong that the pressure forces the oven door open.

To avoid this, always wait a minimum of 20 seconds before removing the container from the oven and place a suitable glass rod or utensil into the cup or glass when heating liquids.

Cooking tips

Food with a thick skin or peel, such as tomatoes, sausage, potatoes and egg plant can burst when heated.

Pierce or score the skin of these foods several times to allow steam to escape.

Eggs heated in their shell can burst, even after removed from the oven.

Eggs can only be cooked in their shells using Microwave (Solo) ≋ in a specially designed egg-boiling device available from speciality stores.

When heating shelled eggs, the yolk may still burst after cooking.

Prick the yolk several times before cooking to avoid this.

When to use	Notes
Defrosting large quantities of food at once, e.g. 4.5 lbs (2 kg) fish	The glass tray can be used on shelf level 1 for defrosting food.
Reheating food	Always cover food when reheating it, except when reheating fried food or food with breading.
Cooking vegetables	Add a little water to vegetables which have been kept stored. Vegetable cooking times depend on the texture of the vegetable. Fresh vegetables contain more water than vegetables which have been stored and usually cook more quickly.
Cooking frozen meals	Deep frozen meals can be defrosted and then reheated or cooked in one process. Follow the instructions on the package.

Tables for defrosting, reheating and cooking food using Microwave (Solo) ≋

The following notes apply to all tables:

Always follow USDA guidelines on food safety.

- Take note of the recommended microwave power levels, durations and standing times. These take the consistency, the quantity and the initial temperature of the food into account.
- In general you are recommended to select the middle duration.
- Place the food on the glass tray and use shelf level 1.

Table for defrosting food

	Quantity	≋	◷ [min]	⌛ [min] 1)
Dairy products				
Cream	1 cup (250 ml)	LO	13–17	10–15
Butter	1/2 lb (250 g)	LO	8–10	5–10
Cheese slices	1/2 lb (250 g)	LO	6–8	10–15
Milk	1 pt (500 ml)	LO	14–16	10–15
Baked Goods				
Pound Cake (1 slice)	Approx. 1/4 lb (100 g)	LO	1–2	5–10
Pound Cake	Approx. 3/4 lb (300 g)	LO	4–6	5–10
Fruit Cake (3 slices)	Approx. 3/4 lb (300 g)	LO	6–8	10–15
Butter Cake (3 slices)	Approx. 3/4 lb (300 g)	LO	5–7	5–10
Cream Cake (1 slice)	Approx. 1/4 lb (100 g)	LO	1:30	5–10
Cream Cake (3 slices)	Approx. 3/4 lb (300 g)	LO	4–4:30	5–10
Yeast rolls, puff pastries (4 pieces)		LO	6–8	5–10
Fruit				
Strawberries, raspberries	1/2 lb (250 g)	LO	7–8	5–10
Currants	1/2 lb (250 g)	LO	8–9	5–10
Plums	1 lb (500 g)	LO	12–16	5–10
Meat				
Ground Meat	1 lb (500 g)	LO	16–18	5–10
Chicken	2 lbs (1000 g)	LO	34–36	5–10
Vegetables				
Peas	1/2 lb (250 g)	LO	8–12	5–10
Asparagus	1/2 lb (250 g)	LO	8–12	10–15
Beans	1 lb (500 g)	LO	13–18	10–15
Red cabbage	1 lb (500 g)	LO	15–20	10–15
Spinach	10.5 oz (300 g)	LO	12–14	10–15

≋ Microwave power level / ◷ thawing time / ⌛ resting time

1) Allow food to stand at room temperature. During this resting time, the temperature will distribute throughout the food more evenly.

Table for reheating food

	Quantity	≋	⏲ [min:sec]	⌛ [min] 1)
Drinks 2)				
Coffee, drink temperature 140-150°F / 60–65°C	1 drink (2/3 cup / 200 ml)	HI	0:50–1:10	–
Milk, drink temperature 140-150°F / 60–65°C	1 drink (2/3 cup / 200 ml)	HI	1:00–1:50 3)	–
Boiling water	1 drink (1/2 cup / 125 ml)	HI	1:00–1:50	–
Baby bottle (milk)	Approx. 2/3 cup / 200 ml	--	0:50–1:00 3)	1
Mulled wine, drink temperature 140-150°F / 60–65°C	1 glass (2/3 cup / 200 ml)	HI	0:50–1:10	–
Food 3)				
Baby Food (room temperature)	1 jar (7 oz / 200 g)	--	0:30–1:00	1
Cutlets, fried	7 oz (200 g)	---	3:00–5:00	2
Fish fillet, fried	7 oz (200 g)	---	3:00–4:00	2
Roast meat in gravy	7 oz (200 g)	---	3:00–5:00	1
Side dishes	1/2 lb (250 g)	---	3:00–5:00	1
Vegetables	1/2 lb (250 g)	---	4:00–5:00	1
Gravy	1 cup (250 ml)	---	4:00–5:00	1
Soup / Casserole	1 cup (250 ml)	---	4:00–5:00	1
Soup / Casserole	1 pt (500 ml)	---	7:00–8:00	1

≋ Microwave power level / ⏲ heating-up time / ⌛ resting time

1) Allow food to stand at room temperature. During this resting time, the temperature will distribute throughout the food more evenly.

2) To avoid a boiling delay, always wait a minimum of 20 seconds before removing the container from the oven and place a suitable utensil into the cup or glass when heating liquids.

3) Durations apply for food with an initial temperature of approx. 41°F / 5°C.
For food which is not normally stored in the fridge an initial temperature of approx. 68°F / 20°C is assumed.
With the exception of baby food and delicate sauces, food should be heated to a temperature of 158-167°F / 70–75°C.

Table for cooking food

	Quantity	Level ---- [min]	+	Level -- [min]	[min] 1)
Meat					
Meatballs in gravy (14 oz / 400 g meat)		10–12		–	2–3
Stew (1.5 lb / 750 g meat)		16	+	15	2–3
Poultry					
Chicken in sauce	Approx. 1 3/4 lb (800 g)	4	+	12	2–3
Chicken Curry	Approx. 2 lbs (900 g)	5	+	12	2–3
Chicken Risotto	Approx. 3 1/2 lbs (1.6 kg)	10	+	15	3–5
Fish					
Fillet in sauce	Approx. 2 lbs (900 g)	8–10		–	2–3
Fish Curry	Approx. 3 lbs (1.5 kg)	5	+	12	3–5
Fresh vegetables					
Carrots	10.5 oz (300 g)	2	+	6	2
Cauliflower florets	1 lb (500 g)	6	+	10	2
Peas	1 lb (450 g)	5	+	10	2
Peppers, cut into strips	1 lb (500 g)	5	+	10	2
Kohlrabi, batons	1 lb (500 g)	3	+	8	2
Brussels sprouts	10.5 oz (300 g)	3	+	9	2
Asparagus	1 lb (500 g)	5	+	8	2
Broccoli, florets	10.5 oz (300 g)	4	+	4	2
Leeks	1 lb (500 g)	5	+	8	2
Green Beans	1 lb (500 g)	4	+	12	2
Frozen Vegetables					
Peas, Mixed Vegetables	1 lb (450 g)	5	+	11	2
Spinach	1 lb (450 g)	5	+	7	2
Brussels sprouts	10.5 oz (300 g)	4	+	6	2
Broccoli	10.5 oz (300 g)	3	+	6	2
Leeks	1 lb (450 g)	4	+	8	2
Desserts					
Fruit compote (2 cups / 500 ml fruit juice or 1 lb / 500 g fruit)		6–8		–	–

Microwave power level / cooking duration / resting time

1) Allow food to stand at room temperature. During this resting time, the temperature will distribute throughout the food more evenly.

Defrosting without Microwave power

To gently defrost food use the Defrost mode.

When this mode is selected, the fan turns on and circulates the air around the oven cavity.

⚠ Risk of salmonella poisoning!
Be sure to observe proper hygiene rules when defrosting poultry.
Do not use the liquid from the defrosted poultry.

Tips

- Place the food to be defrosted on the glass tray or in a suitable dish.
- Small pieces of poultry can be placed on an upside down dish in the glass tray. This way they will not be lying in defrosting liquid.
- Use shelf level 1 or 2 depending on the thickness of the food.

Always observe USDA food safety guidelines.

Canning containers

⚠ Danger of injury!
Do not use the appliance to heat up or can food in sealed jars or containers.
Pressure will build up inside them and they can explode causing damage to the appliance, as well as the risk of injury and scalding.

Only use jars designed for canning:

– "Convection Bake" [⚙]: Jars with screw-top lids.

– "Microwave" [≋]: Microwave-safe bottling jars sealed with clips or clear adhesive tape.

Sparking can be cause by metal brackets on jars!
Close the jars with clear adhesive tape or with clips suitable for microwave use. Never use metal clips or jars with screw-on lids.

Preparation

The instructions below are for 5 16 ounce (0.5 liter) glass jars.

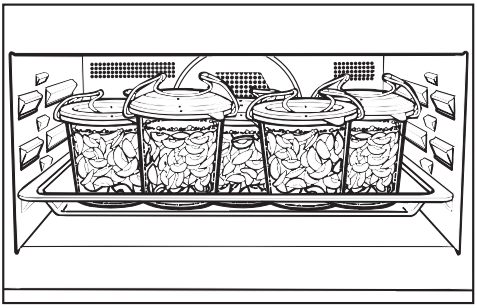

■ Prepare the jars in the usual way. Fill the jars up to 3/4" (2 cm) below the rim.

■ Insert the glass tray on shelf level 1 and place the jars on it.

Canning with Convection Bake

- Select the Convection Bake mode and a temperature of 300-340°F (150–170 °C).
- Wait until bubbles rise evenly in the jars.

Then reduce the temperature to prevent the contents from boiling over.

Fruit / Cucumbers

- Switch the oven off as soon as bubbles are visible in the jars. Then leave the jars in the warm oven for a further 25–30 minutes.

Vegetables

- Reduce the temperature to 210°F (100°C) as soon as bubbles are visible in the jars.

	Canning duration [min]
Asparagus, Carrots	60–90
Peas, Beans	90–120

- Switch off the oven after the canning duration. Then leave the jars in the warm oven for an additional 25–30 minutes.

Canning with Microwave

- Select Microwave with power level ----.
- Wait until bubbles evenly rise in the jars.
  This takes about 3 minutes per jar. With 5 jars, therefore, it takes 15 minutes.

Then reduce the power level in a timely manner to prevent the contents from boiling over.

Fruit / Cucumbers

- Switch the oven off as soon as bubbles are visible in the jars. Then leave the jars in the warm oven for a further 25–30 minutes.

Vegetables

- Reduce the power level to -- as soon as bubbles are visible in the jars.

	Canning duration [min]
Asparagus, Carrots	approx. 15
Peas, Beans	approx. 25

- Switch the oven off after the canning duration.

After canning

⚠ Danger of burns!
Use pot holders when removing the jars from the oven.

- Take the jars out of the oven.
- Cover the jars with a towel and leave to set for approx. 24 hours.
- Remove any clips or the adhesive tape.
- Make sure all jars are closed properly when storing them.

Gentle Bake

The Gentle Bake mode is ideal for casseroles and gratins which require a crisp top.

Tips

Cakes, pizza, baguettes

- Bake on parchment paper placed on the wire oven rack.
- Use the lowest temperature recommended by the manufacturer.

French fries, croquettes and similar items

- Place these frozen foods on the glass tray.
  Place parchment paper underneath.
- Use the lowest temperature recommended by the manufacturer.
- Turn several times during cooking.

Preparation

Handling food carefully will help protect your health.

- Select the oven mode and temperatures recommended on the food's packaging.
- Preheat the oven.
- Place the food in the preheated oven on the shelf level recommended on the packaging.
- Check the food at the end of the shortest time recommended on the packaging.

⚠ Danger of burns!
Make sure the heating elements are turned off and allowed to cool completely.

⚠ Danger of injury! The steam from a steam cleaner could reach electrical components and cause a short circuit.
Do not use a steam cleaner to clean this appliance.

All surfaces can discolor or be damaged if unsuitable cleaning agents are used. The front of the oven, in particular, will be damaged by oven cleaners and descalers.
All surfaces are susceptible to scratches. Scratches on glass surfaces could cause a breakage.
Remove any cleaning agent residues immediately.

Stubborn soiling may damage the oven.
Once the oven has cooled clean the oven, the inside of the door and the door seal. Waiting too long to clean the oven will make if much more difficult to clean.

Check the door and door seal for any sign of damage. If any damage is seen, the oven should not be used again. Contact Miele.

Unsuitable cleaning agents

To better maintain your appliance avoid the following:

- Cleaners containing soda, ammonia, thinners, or chlorides
- Cleaners containing descaling agents or lime removers
- Abrasive cleaning agents (e.g., powder or cream cleansers, pumice stones)
- Solvent-based cleaners
- Stainless steel cleaners
- Dishwasher cleaners
- Glass cleaning agents
- Ceramic cooktop cleaners
- Hard, abrasive brushes or sponges (e.g. pot scrubbers or scrub sponges, sponges which have previously been used with abrasive cleaning agents)
- Eraser sponges
- Sharp metal scrapers
- Steel wool
- Stainless steel spiral pads
- Spot cleaners
- Oven cleaners*

* These can, however, be used to remove very heavy soiling from PerfectClean treated surfaces.

If stains and food residues are allowed to remain on surfaces for a longer period of time, it may no longer be possible to remove them. Continued use without cleaning will make the oven much harder to clean.

Remove any soiling immediately.

Only the glass tray is dishwasher proof.

Tips

– Soiling caused by spilt juices and cake mixtures is best removed while the oven is still warm. Use caution and make sure the oven is not too hot - Danger of burns.

– The Browning/Broiling element can be lowered for easier cleaning.

– To neutralize odors in the oven, put a container of water with some lemon juice in the oven and heat for a few minutes.

Normal soiling

Moisture inside the oven can cause damage.

Wipe out the oven with a damp cloth so no excess moisture enters the interior of the appliance through the openings.

- Remove normal soiling immediately using a clean sponge with warm water and liquid dish soap applied with a clean, damp microfiber cloth.
- After cleaning, ensure that any detergent residue is removed with clean water.
  This is particularly important when cleaning surfaces treated with PerfectClean enamel as detergent residue can impair the non-stick properties.
- After cleaning, dry the surfaces with a soft cloth.

Stubborn soiling

Fruit juices and roasting juices may cause permanent discoloration to the surfaces of the oven. This will not affect the performance of the oven.

Do not use force to remove stains. Clean only as described in this manual.

- Moisten stubborn soiling with a solution of warm water and liquid dish soap, leave for a few minutes to take effect.
- If necessary, the rough side of a dish sponge can be used to remove the soiling.
- After cleaning, rinse thoroughly with clean water, and dry with a soft cloth.
- Stubborn soiling on PerfectClean surfaces can be cleaned using Miele Oven Cleaner. It must only be applied to cold surfaces in accordance with the instructions on the packaging.

Non-Miele oven spray must only be used in a cold oven and for no longer than 10 minutes.

- If necessary, the rough side of a dish sponge can be used to remove the soiling.
- After cleaning, remove all oven cleaning agent residues thoroughly with clean water, and dry with a soft cloth.

Lowering the Browning / Broiling element

If the oven interior is very dirty, the Browning / Broiling element can be lowered. It is recommended to clean the oven interior with a damp sponge regularly.

⚠ Burn hazard!
Make sure the heating elements are turned off and allowed to cool completely.

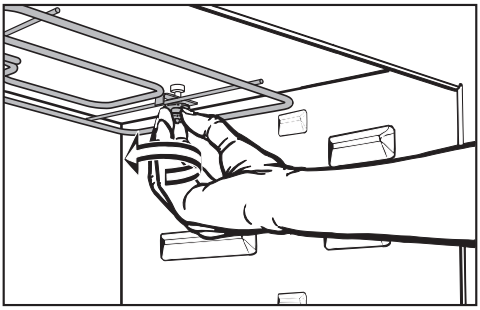

- Unscrew the nut and lower the Browning / Broiling element.

Use caution not to damage the Browning / Broiling element.
Do not use force to lower the Browning / Broiling element.

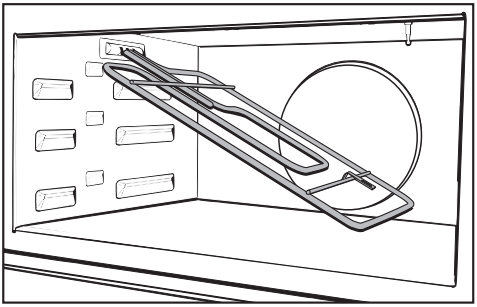

- Carefully lower the Browning / Broiling element.

The cover at the top of the oven cavity can be damaged.
Do not use the hard side of a dish sponge to clean the cover.

- Clean the oven interior with a damp cloth or sponge.
- After cleaning, raise the Browning / Broiling element gently back up again. Refit the nut and tighten to secure the element back in position.

Frequently asked questions

The following faults can be corrected without contacting the Miele Service Department. If in doubt, please contact Miele.

⚠ Danger of injury! Repairs should only be carried out by a qualified and trained professional in accordance with local and national safety regulations. Unauthorized repairs could cause personal injury or machine damage.

Problem	Possible cause and solution
This display is dark.	The time of day display is deactivated, so when the appliance is turned off, the time of day display is turned off. ■ As soon as the oven is turned on, the time of day will appear. If you want it to be displayed continuously, the setting to turn the time of day display back on must be changed (see "Settings – *P 1*").
	There is no power to the appliance. ■ Check if the circuit breaker has tripped.
A program will not start.	If running a program with Microwave, the door is open. ■ Check if the door is closed properly.
	If running a program with Microwave, a microwave power level or cooking time have not been set. ■ Be sure to set the power level and cooking time.
	If running a Combi mode, all necessary setting have not been set. ■ Be sure to set the microwave power level, temperature and cooking time.

Problem	Possible cause and solution
An oven mode has been selected and the time of day and the 🔒 symbol still appear in the display.	The system lock 🔒 is On. ■ Turn off the system lock (see "System lock 🔒").
The oven does not heat up.	Demo mode has been activated. DES_ appears in the display. The oven can be operated but does not heat up. ■ Deactivate Demo mode (see "Settings – P 13").
An oven mode has been selected but the oven is not working.	There has been a power failure which has caused the current cooking process to stop. ■ Turn the mode selector to the • position and turn the oven off. Start the cooking process again.
12:00 will appear in the display with ▲ flashing under ⏲:	The power supply was interrupted for longer than 200 hours. ■ Reset the time of day (see "Before using for the first time").
0:00 appears unexpectedly in this display and the ⏲ symbol flashes at the same time. The buzzer may also be sounding.	The oven has been operating for an unusually long period of time, this has activated the "Safety cut-out feature". ■ Turn the mode selector to •. The oven is now ready to use again immediately.
F XX appears in the display.	A fault has occurred that you cannot resolve. ■ Contact Miele Technical Service.
If the door is opened while using "Microwave" ≋, the oven stops making a noise.	This is not a fault. If the door is opened while "Microwave" ≋ is being used, the door contact switch will turn off the microwave and switch the cooling fan to a lower speed.
A noise is heard after the cooking process is complete.	The cooling fan has turned on. It will turn off automatically after a short time.

Problem	Possible cause and solution
An strange sound is heard when the oven is operating in microwave mode.	Metal was used in the oven during a program with microwave. ■ Check if there are sparks caused by using metal dishes (see "Suitable containers for microwave use").
	When using a program with microwave the dish was covered with alumimum foil. ■ If necessary, remove the cover.
	The wire oven rack was used during a program with microwave. ■ Always use the glass tray for programs with microwave.
The oven has turned itself off.	The oven turns off automatically if a button is not pressed after a certain amount of time or after a cooking program has ended to save power. ■ Turn the oven back on.
Baked goods are not cooked properly after following the times given in the chart.	A different temperature than that given in the recipe was used. ■ Select the temperature required for the recipe.
	The ingredient quantities are different from those given in the recipe. ■ Double check the recipe. The addition of more liquid or more eggs will make a wetter mixture which will take longer to cook.
The browning is uneven.	The wrong temperature or shelf level was selected. ■ There will always be a slight unevenness. If the unevenness is great, check whether the correct temperature and shelf level were selected.
	The cookware used was not right for the program chosen. Bright, shiny pans are not very suitable. These reflect heat, which means that the heat does not penetrate to the food effectively, resulting in uneven or poor browning. ■ Dark, matte pans are best for baking.

Problem	Possible cause and solution
The food is not sufficiently heated or is not cooked at the end of a set duration when using Microwave (Solo) ≋.	Check that the program was restarted after interrupting a cooking process using microwave power. ■ Restart the program to ensure the food is heated or cooked properly.
	When cooking for heating with microwave, the time set was too short. ■ Check that the correct time is selected for the microwave power level. The lower the microwave power level the longer the cooking time.
The food has cooled down too quickly after being reheated or cooked in microwave mode.	Due to the microwave properties, the heat is generated first at the edges of the food and is then transferred to the center of the food. If the food is heated with a high microwave power level the food may be hot on the outside but not heated through to the center. ■ When cooking foods with different sizes, such as with menu cooking, a lower microwave power level for a longer period of time is most suitable.
The oven lighting turns off after a short time.	The oven is facotry set to turn off automatically after 15 seconds. This setting can be changed (see "Settings").

Problem	Possible cause and solution
The oven lighting does not turn on. 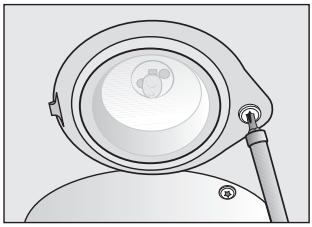	The halogen bulb needs to be replaced. ⚠ Danger of burns! Make sure the heating elements are turned off and allowed to cool completely. The light cover consists of two seperate parts, a glass cover and mounting. If it falls it can be damaged. When removing the cover hold it firmly so that it does not fall. Place a towel on the oven floor and open door to avoid damage. ■ Disconnect the appliance from the power supply. ■ Remove the screw to the lamp cover using a T20 Torx screwdriver, and take off the cover. ■ Do not touch the halogen blub with bare fingers. Observe the manufacturers instructions. Remove the halogen bulb. ■ Replace it with a new halogen bulb (Sylvania 66740, 120 V, 40 W, G9, FS1). It must be thermally stable up to 575°F (300°C). ■ Replace the glass piece in the mounting, and refit the lamp cover. Make sure that the lug on the mounting is correctly located in the notch in the roof of the oven, then screw the mounting back into place. ■ Reconnect the oven to the electrical supply.

After sales service

In the event of a fault which you cannot easily correct yourself, please contact:

- your Miele dealer, or
- the Miele Technical Service Department.

See back cover for contact details.

Please quote the model and serial number of your appliance when contacting Miele.

This information is given on the data plate, visible on the front frame of the oven, with the door fully open.

Warranty

For further information, please refer to your warranty booklet.

Disposal of the packing material

The cardboard box and packing materials protect the appliance during shipping. They have been designed to be biodegradable and recyclable.

Ensure that any plastic wrappings, bags, etc. are disposed of safely and kept out of the reach of children. Danger of suffocation!

Disposal of your old appliance

Old electrical and electronic appliances often still contain valuable materials. However, they also contain harmful substances that were essential for the proper functioning and safe use of the equipment. Handling these materials improperly or disposing of them in your household waste can be harmful to your health and the environment. Therefore, please do not dispose of your old appliance with regular household waste.

Old appliances may contain materials that can be recycled. Please contact your local recycling authority about the possibility of recycling these materials.

Please be sure that your old appliance does not pose a danger to children while being stored for disposal.

⚠ CAUTION:
Before servicing, disconnect the power supply by either removing the fuse, shutting off the power main or manually "tripping" the circuit breaker.

Installation, repair and maintenance work must be performed by a Miele authorized service technician. Work by unqualified persons could be dangerous and may void the warranty.

Before connecting the appliance to the power supply, make sure that the voltage and frequency listed on the data plate correspond with the household electrical supply. This data must correspond to prevent machine damage. Consult an electrician if in doubt.

Only operate the appliance after it has been installed into cabinetry.

The plug must be inserted into a suitable outlet that has been installed and grounded in compliance with all applicable local regulations.

WARNING: THIS APPLIANCE MUST BE GROUNDED

Installer: Please pass these instructions on to the customer.

Electrical connection

The oven is equipped with a power cord approx. 6 ft. (1.8 m) in length with a 4-prong NEMA 14-30P plug ready for connection to the power supply:

– 120/208 V, 30 A, 60 Hz

or

– 120/240 V, 30 A, 60 Hz

Minimum branch circuit fuse rating should be 20 A and maximum fuse rating must not be greater than 30 A.

The voltage can be adjusted (see "Settings - P 12").

SAVE THESE INSTRUCTIONS FOR THE ELECTRICAL INSPECTOR'S USE.

Installation diagrams

Appliance and cut-out dimensions

Miele ovens can be installed flush or proud. Discuss your installation requirements with your architect, designer and installer.

Installation in a tall cabinet

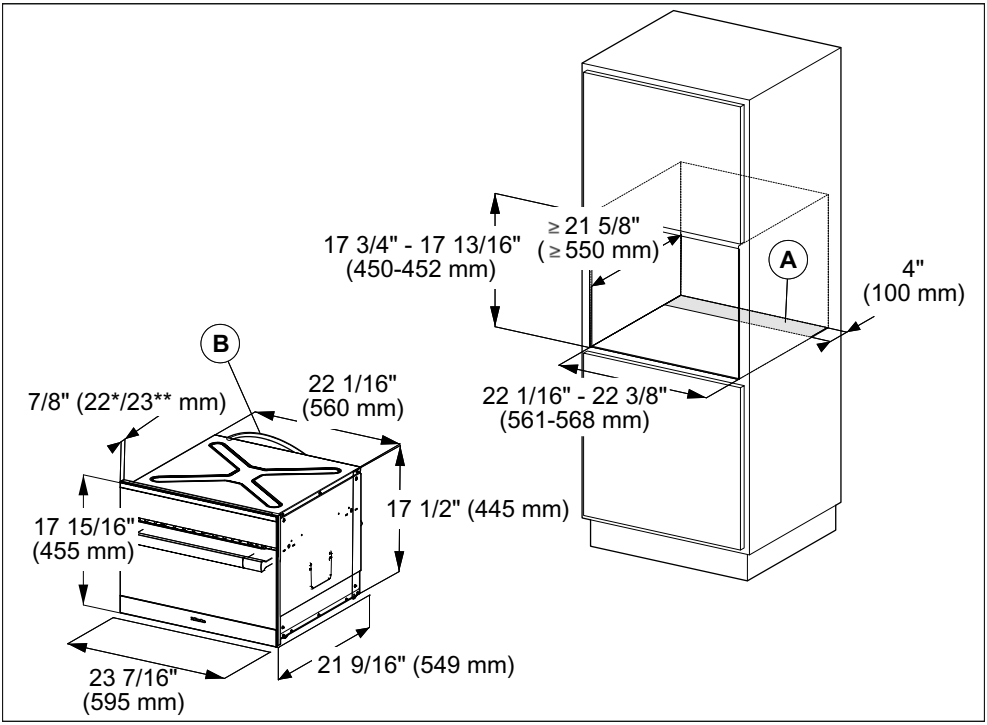

Ⓐ Cut-out (4" x 22" / 100 mm x 560 mm) in the bottom of the cabinet for power cord and ventilation

Ⓑ Power cord with plug

* Oven with glass front

** Oven with metal front

Depending on the model, the oven front may differ from the one shown the drawing. Current specifications can be found on the Miele website.

Undercounter installation

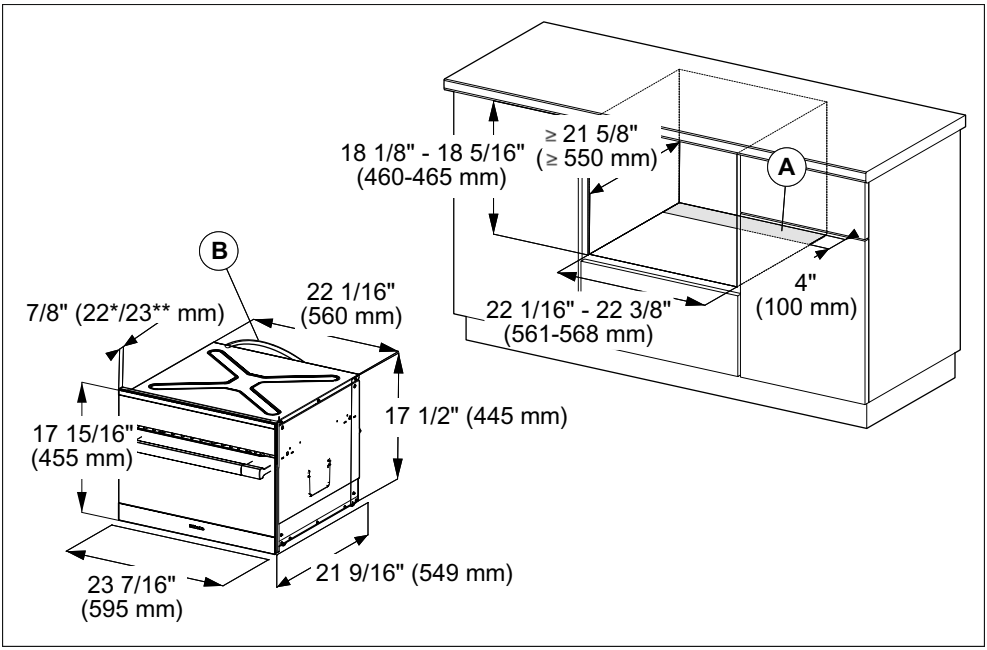

Ⓐ Cut-out (4" x 22" / 100 mm x 560 mm) in the bottom of the cabinet for power cord and ventilation

Ⓑ Power cord with plug

* Oven with glass front

** Oven with metal front

Depending on the model, the oven front may differ from the one shown the drawing. Current specifications can be found on the Miele website.

Installation diagrams

Combination installation with an oven into a tall cabinet

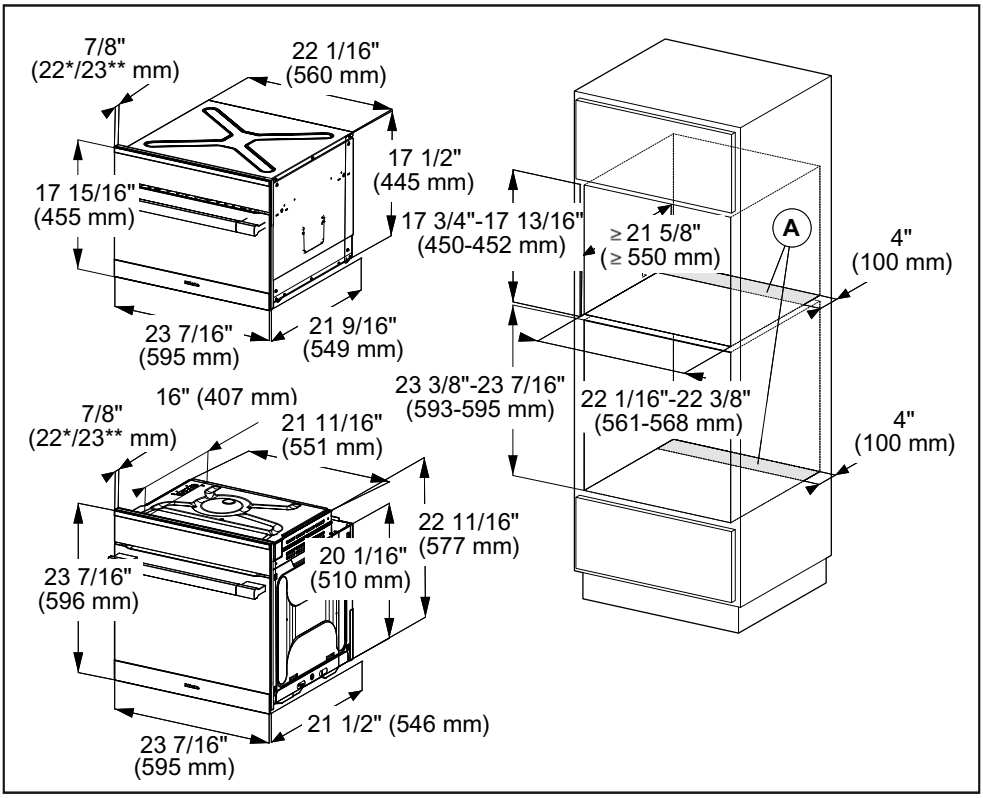

Ⓐ Cut-out (4" x 22" / 100 mm x 560 mm) in the bottom of the cabinet for power cord and ventilation

* Oven with glass front

** Oven with metal front

Depending on the model, the oven front may differ from the one shown the drawing. Current specifications can be found on the Miele website.

Front dimensions

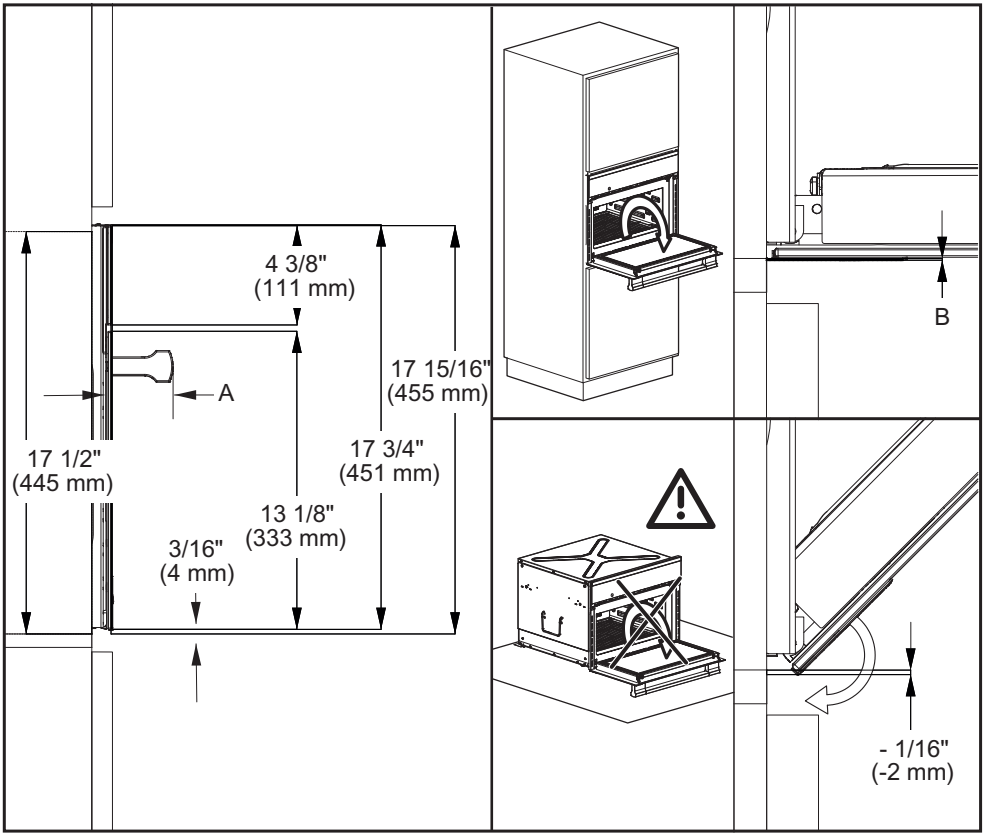

A H61xx: 2 5/16" (59 mm)

H62xx: 1 5/8" (42 mm)

B Speed Oven with glass front: 1/16" (2.2 mm)

Speed Oven with metal front: 1/16 (1.2 mm)

⚠ The oven must not be operated until it has been properly installed within cabinetry.

- Remove the side handles, if any.
- Connect the power cord to the electrical supply.
- Push the oven into the cabinetry up to the oven trim and align it.

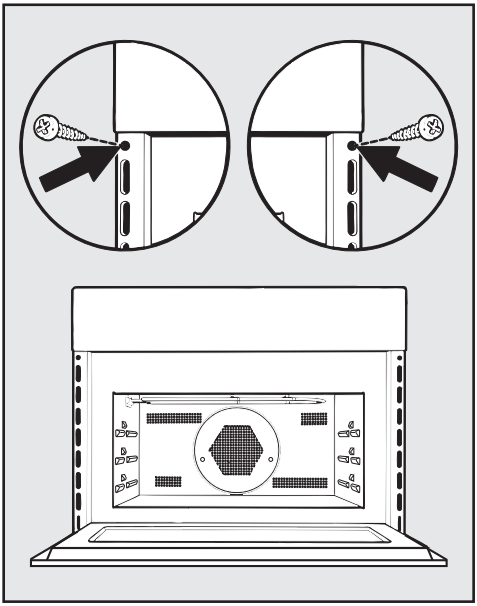

- Open the door and use the screws supplied to secure the oven to the side walls of the cabinetry through the holes in the oven trim.

Please have the model and serial number of your appliance available before contacting Technical Service.

Miele

U.S.A.

Miele, Inc.

National Headquarters
9 Independence Way
Princeton, NJ 08540
Phone: 800-843-7231
Fax: 609-419-4298
www.mieleusa.com

Technical Service & Support Nationwide
Phone: 800-999-1360
Fax: 888-586-8056
TechnicalService@mieleusa.com

Canada

Importer
Miele Limited

Headquarters and Miele Centre
161 Four Valley Drive
Vaughan, ON L4K 4V8
www.miele.ca

Customer Care Centre
Phone: 800-565-6435
905-532-2272
customercare@miele.ca

Germany
Manufacturer
Miele & Cie. KG
Carl-Miele-Straße 29
33332 Gütersloh

Miele

H6100BM; H6200BM

CE

en – US, CA

M.-Nr. 10 228 070 / 00