American Standard

COLONY® PRO

KITCHEN FAUCET
MEZCLADORA DE COCINA DUOMANDO
ROBINET DE CUISINE

Installation Instructions
Instrucciones de Instalacion
Instructions d'installation

7074.551
7074.550

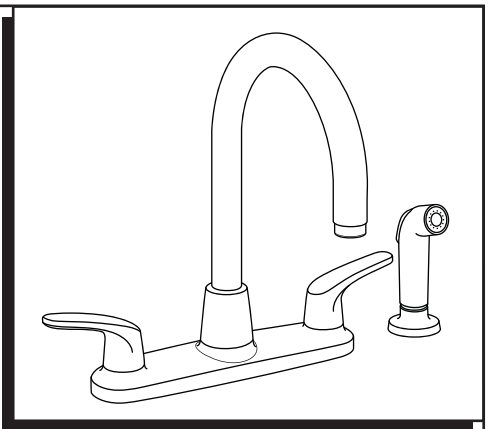

Thank you for selecting American-Standard...the benchmark of fine quality for over 100 years. To ensure that your installation proceeds smoothly--please read these instructions carefully before you begin.

Gracias por preferir American Standard.... El punto de referencia de la más fina calidad por más de 100 años. Para asegurar que su instalación se efectue de la mejor forma favor de leer estas instrucciones cuidadosamente antes de empezar.

Nous vous remercions d'avoir choisi American Standard... synonyme de qualité supérieure depuis plus de 100 ans. Pour s'assurer d'une installation sans inconvénients, veuillez lire attentivement ces instructions avant de commencer.

Certified to comply with ASME A112.18.1M
Certifié ASME A112.18.1M
M965775 (9/16)

TOOLS REQUIRED | **HERRAMIENTAS NECESARIAS** | **OUTILS REQUIS**



Channel Locks
Pinzas de Plomero
Pinces de sûreté



Adjustable Wrench
Llave Ajustable
Clé universelle

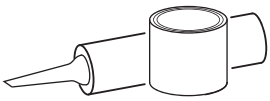

Plumbers' Putty or Caulking
Masilla de Plomero
Mastic de plomberie



Phillips Screwdriver
Desarmador Regular
Tournevis cruciforme

1

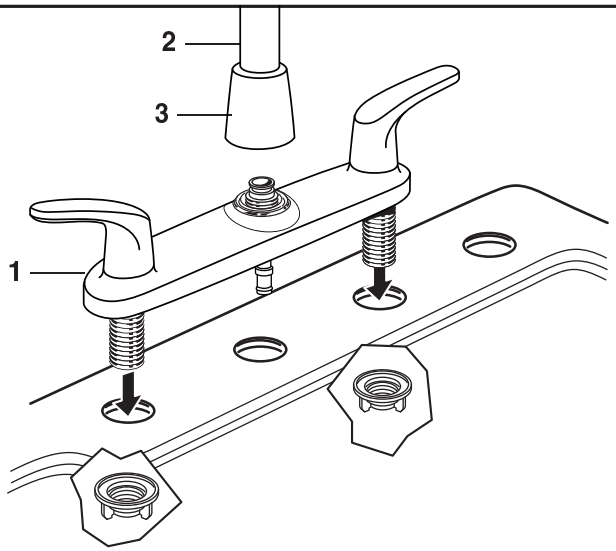

INSTALL FAUCET

CAUTION Turn off hot and cold water supplies before beginning.

- Install SPOUT **(2)** to FAUCET **(1)** by threading ESCUTCHEON **(3)**.
- Install FAUCET **(1)** on sink. **(No sealant is required unless mounting deck on SINK is uneven).**

INSTALACION DE LA LLAVE

ADVERTENCIA: Cierre la tuberia de la ali mentación del agua caliente y fría antes de comenzar lainstalación

- Instale la SALIDA **(2)** al GRIFO **(1)** enroscando el CHAPETÓN **(3)**.
- Instale la llave **(1)** sobre el fregadero. **(No es necesario sellar a menos que la cubierta de montaje en el fregadero no este uniforme).**

INSTALLER LE ROBINET

ATTENTION Fermer l'alimentation d'eau chaude et froide avant de commencer.

- Installer le BEC **(2)** sur le ROBINET **(1)** en enfilant la ROSACE **(3)**.
- Installer le ROBINET **(1)** sur l'évier. **(Aucun scellant n'est requis sauf si la surface de l'ÉVIER est inégale).**

HOTLINE FOR HELP **NUMBERO DE EMERGENCIA** **ASSISTANCE TÉLÉPHONIQUE**



For toll-free information and answers to your questions, call:
Para información y respuestas a sus preguntas, llame sin costo al:
Pour information et réponses à vos questions, composer sans frais:
1 800 442-1902
Weekdays Días laborales de las Sur semaine:
8:00 to 8:00 p.m. EST
CANADA 1-800-387-0369 (TORONTO 1-905-306-1093)
Weekdays Días laborales de las Sur semaine:
8:00 to 7:00 p.m. EST
MEXICO 01-800-839-1200

Product names listed herein are trademarks of American Standard Inc. © AS America, Inc. 2016

2

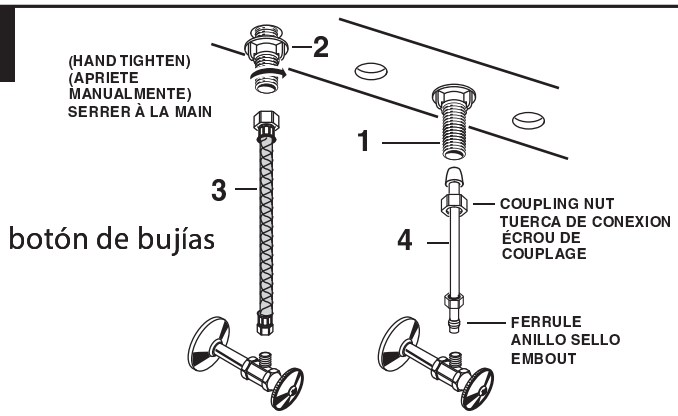

NOTE: FLEXIBLE SUPPLIES OR BULL-NOSE RISERS MUST BE PURCHASED SEPARATELY.
NOTA: LOS CONECTORES FLEXIBLES O LAS CONTRAHUELLAS REDONDEADAS DEBEN SER COMPRADOS POR SEPARADO.
NOTE : LEX TUYAUX FLEXIBLES OU TUYAUX D'ÉVENT DÉSAXÉS DOIVENT ÊTRE ACHETÉS SÉPARÉMENT.

SECURE FAUCET AND MAKE WATER SUPPLY CONNECTIONS

- Secure FAUCET **(1)** with ATTACHMENT NUTS **(2)** supplied. (HAND TIGHTEN).
- Connect water supply to FAUCET **(1)** with 1/2" IPS FLEXIBLE SUPPLIES **(3)** or 3/8" O.D. BULL-NOSE RISERS **(4)**. Use adjustable wrench to tighten connections. Do not over tighten. Be careful not to kink copper supply when bending. Use tubing cutter to cut to proper length.

ASEGURE LA LLAVE Y HAGA LAS CONEXIONES DE ALIMENTACION

- Asegure la llave **(1)** con las tuercas de fijación incluidas **(2)** (APRIETE MANUALMENTE).
- Conecte el suministro de agua a la llave **(1)** con los conectores flexibles roscados de 1/2" o con los tubos de cobre de 3/8" con conexiones macho. Utilice la llave ajustable para apretar las conexiones . No apriete de manera excesiva Sea cuidadoso, no retuerza los tubos de cobre cuando los doble. Utilice un cortador para tubo, para cortar a la longitud apropiada.

FIXER LE ROBINET ET FAIRE LES RACCORDEMENTS D'ALIMENTATION D'EAU

- Fixer le ROBINET**(1)** avec les ÉCROUS DE FIXATION **(2)** inclus. (SERRER À LA MAIN).
- Raccorder l'alimentation d'eau au ROBINET **(1)** avec des TUYAUX FLEXIBLES DE 1/2" IPS **(3)** ou des TUYAUX D'ÉVENT DÉSAXÉS DE 3/8" D.E. **(4)**. Serrer les raccords avec la clé universelle. Ne pas trop serrer. Veiller à ne pas crochir les tuyaux de cuivre en les pliant. Utiliser une scie à métaux pour ramener le tuyau à la bonne longueur.

3

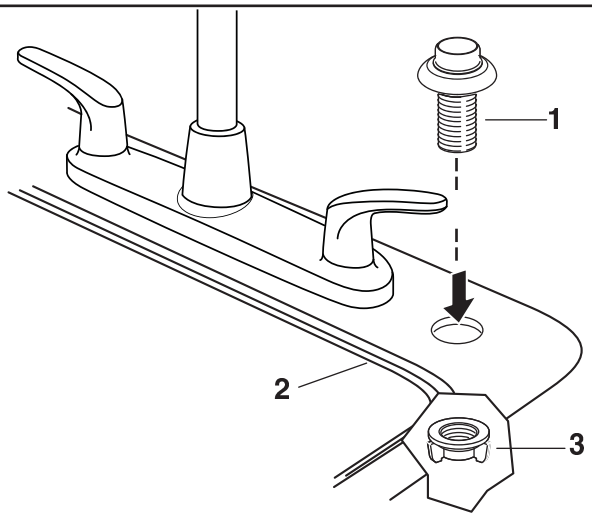

FITTING WITH SPRAY

- Place SPRAY HOLDER **(1)** into separate hole of SINK **(2)** and assemble NUT **(3)** onto shank.
- From underside of SINK **(2)** and hand tighten NUT **(3)**.

MEZCLADORA CON REGADERA

- Coloque el portaregadera **(1)** en el orificio separado de el fregadero **(2)** y ensamble la tuerca de fijación **(3)** sobre la rosca del portaregadera.
- Por la parte inferior de el fregadero **(2)** apriete manua lmente la tuerca **(3)**

ROBINET AVEC DOUCHETTE

- Placer le PORTE-DOUCHETTE **(1)** dans l'orifice séparé de l'évier **(2)** et assembler l'ÉCROU **(3)** et la tige.
- Par dessous l'ÉVIER **(2)** et serrer l'ÉCROU **(3)** à la main.

4

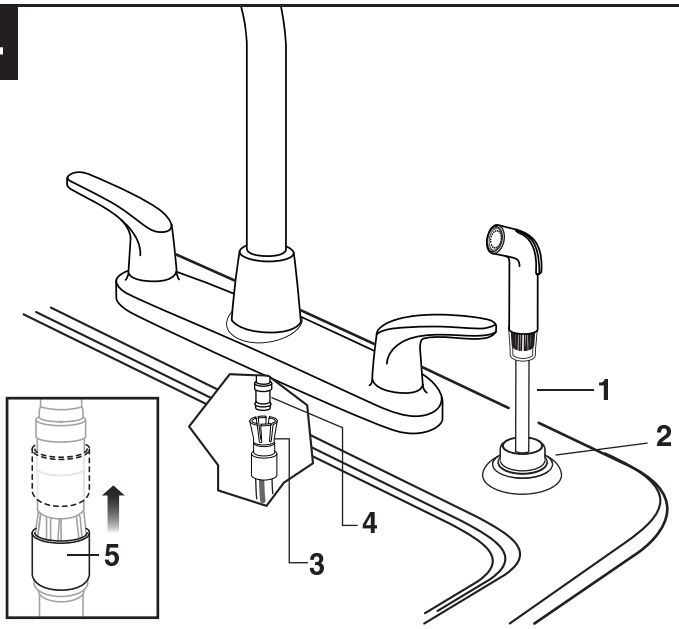

FITTING WITH SPRAY

- Feed SPRAY HOSE **(1)** through SPRAY HOLDER **(2)** and attach QUICK CONNECT **(3)** of HOSE **(1)** to HOSE ADAPTOR **(4)** on valve body. Slide LOCKING COLLAR **(5)** to secure.

MEZCLADORA CON REGADERA

- Alimente la manguera de la regadera **(1)** através del portare gadera **(2)** y sujete la tuerca de conexión **(3)** de la manguera **(1)** al adapatador de la manguera **(4)** sobre el cuerpo de la valvula. Apriete la tuerca de conexión **(3)** firmemente.

ROBINET AVEC DOUCHETTE

- Glisser le BOYAU DE LA DOUCHETTE **(1)** à travers le PORTE-DOUCHETTE **(2)** et joindre l'ÉCROU DE COUPLAGE **(3)** de l'ADAPTEUR **(4)** BOYAU À BOYAU **(1)** au corps de la valve. Serrer fermement l'ÉCROU DE COUPLAGE.

5

TEST INSTALLED FAUCET

- Remove AERATOR. With handles in OFF position, turn on water supplies and check all connections for leaks.
- Operate both HANDLES to flush water lines thoroughly. Rotate SPOUT in both directions. Replace AERATOR.
- Direct SPRAY HEAD into sink and activate SPRAY. Check HOSE connections for leaks.

PRUEBA DE LA LLAVE INSTALADA

- Remover el aireador con los manerales en la posición de cerrado, abrir la alimentación de agua y checar todas las conexiones contra goteo (contra fugas)
- Girar ambos manerales para dejar fluir el agua de las tuberias. Girar la salida en ambas direcciones. Reinstalar el aireador.
- Dirigir la cabeza de la regadera hacia adentro del fregadero y active la regadera. Checar las conexiones de la manguera contra fugas.

TESTER L'INSTALLATION DU ROBINET

- Enlever l'AÉRATEUR. Les poignées en position FERMÉ, ouvrir l'alimentation d'eau et vérifier si les raccords fuient.
- Ouvrir les deux POIGNÉES pour rincer les conduits d'eau abondamment. Faire pivoter le BEC dans les deux directions. Replacer l'AÉRATEUR.
- En la dirigeant dans l'évier, activer la DOUCHETTE. Vérifier si le BOYAU fuit.

6

If faucet drips proceed as follows:

- Aerator may accumulate dirt causing distorted and reduced water flow. Remove aerator and rinse clean.
- If spout drips, operate handles several times from OFF to ON position. Do not force-handles turn only 90˚.

CARE INSTRUCTIONS:

DO: *SIMPLY RINSE THE PRODUCT CLEAN WITH CLEAR WATER. DRY WITH A SOFT COTTON FLANNEL CLOTH.*

DO NOT: *DO NOT CLEAN THE PRODUCT WITH SOAPS, ACID, POLISH, ABRASIVES, HARSH CLEANERS, OR A CLOTH WITH A COARSE SURFACE.*

Si la llave gotea proceda como sigue:

- El aireador tal vez acumule suciedad, causando un flujo no uniforme del agua
- Remover el aireador, enjuagar y limpiar. Si la salida gotea gire los manerales varias veces desde la posición de cerrado a la posición de abierto. No force los manerales, solamente girelos a 90 grados.

INSTRUCCIONES DE CUIDADO DEL PRODUCTO:

LIMPIE *EL PRODUCTO CON AGUA LIMPIA Y SÉQUELO CON UNA TELA SUAVE DE FRANELA DE ALGODÓN.*

NO LIMPIE *EL PRODUCTO CON JABÓN, ÁCIDOS, PULIDORES, ABRASIVOS, LIMPIADORES FUERTES O TELAS ÁSPERAS.*

Si le robinet coule, suivre les instructions suivantes:

- La saleté peut s'accumuler dans l'aérateur et causer un débit d'eau plus faible ou inégal. Enlever l'aérateur et rincer.
- Si le bec coule, ouvrir et fermer les poignées plusieurs fois de suite. Ne pas forcer. Tourner seulement à 90˚.

INSTRUCTIONS POUR L'ENTRETIEN

FAIRE : *SIMPLEMENT RINCER LE PRODUIT AVEC DE L'EAU CLAIRE JUSQU'À CE QU'IL SOIT PROPRE SÉCHER AVEC UN LINGE DE FLANELLE DE COTON DOUX.*

NE PAS FAIRE : *NE PAS NETTOYER LE PRODUIT AVEC DES SAVONS, DE L'ACIDE, DU POLISH, DES ABRASIFS, DES NETTOYANTS AGRESSIFS OU UN LINGE À TEXTURE RUGUEUSE.*

M965775 (9/16)

American Standard

COLONY® PRO

KITCHEN FAUCET
MEZCLADORA DE COCINA DUOMANDO
ROBINET DE CUISINE

MODEL NUMBER, NÚMERO DE MODELO, NUMÉRO DE MODÈLE

7074.551
7074.550

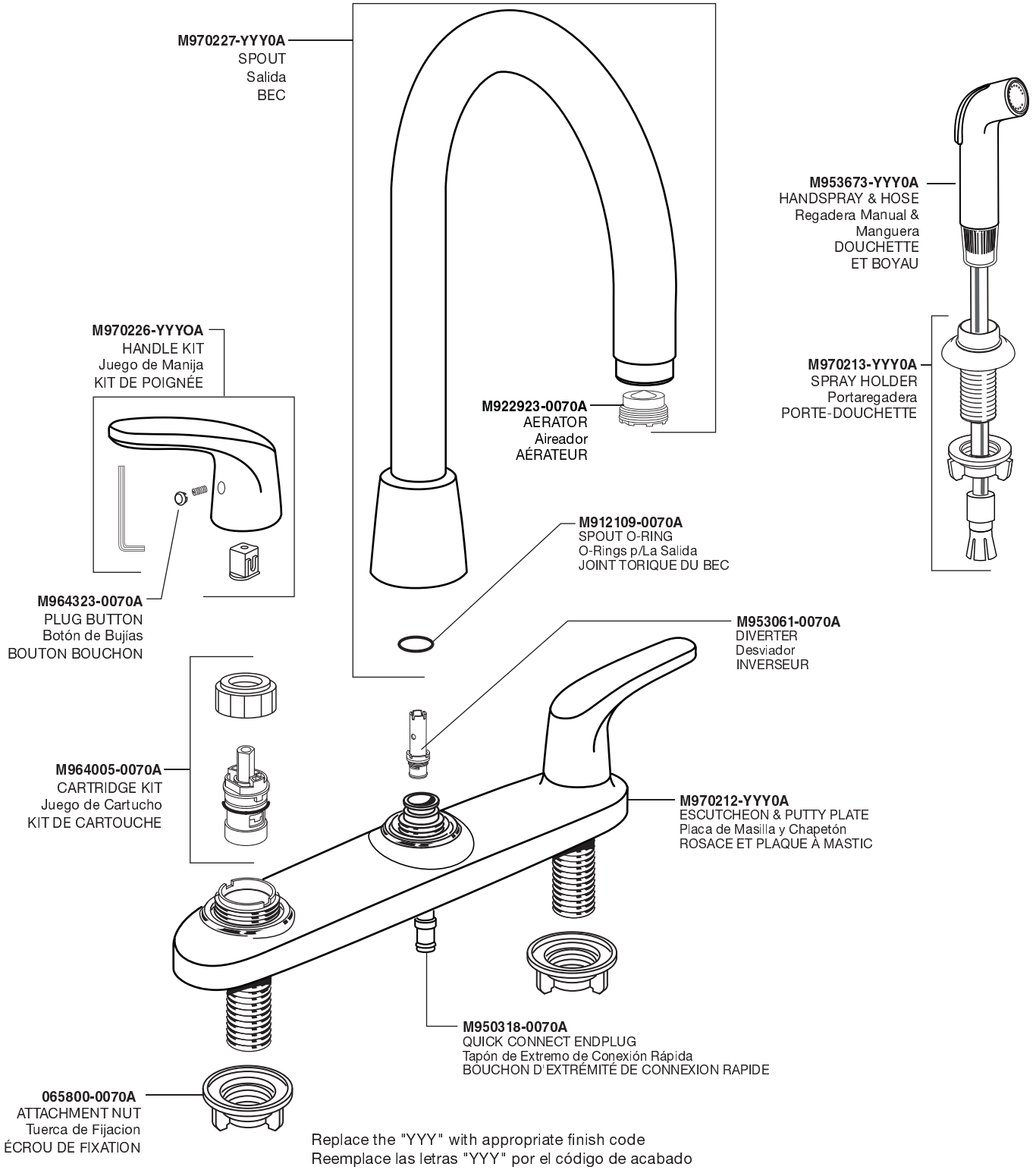

Replace the "YYY" with appropriate finish code
Reemplace las letras "YYY" por el código de acabado
Remplacer le "YYY" par le code de finition approprié

CHROME, CROMO, CHROME	002

PART OF LIXIL

AS AMERICA, INC. ONE YEAR LIMITED WARRANTY FOR COMMERCIAL FIXTURES

If inspection of this AS America, Inc. ("American Standard®") plumbing product, within one year after its initial purchase, confirms that it is defective in materials or workmanship, American Standard® will repair or, at its option, exchange the product for a similar model.

If the commercial fixture is purchased with a matching American Standard flush valve, American Standard will extend the limited commercial warranty for the commercial fixture to five years. Proof of purchase is required and must show that the commercial fixture and flush valve are purchased together and in the same proof of purchase document.

This limited warranty applies only to the original purchaser and installation of these products. In the event of a limited warranty claim, proof of purchase will be required – **save sales receipt.**

This limited warranty does not apply to local building code compliance. Since local building codes vary considerably, the purchaser of this product should check with a local building or plumbing contractor to insure local code compliance before installation.

This limited warranty is void if the product has been moved from its initial place of installation; if it has been subjected to faulty maintenance, abuse, misuse, accident or other damages; if it was not installed in accordance with American Standard®'s instructions; or if it has been modified in a manner inconsistent with the product as shipped by American Standard®.

American Standard®'s option to repair or exchange the product under this limited warranty does not cover any labor or other costs of removal or installation. IN NO EVENT WILL AMERICAN STANDARD® BE LIABLE FOR THE COST OF REPAIR OR REPLACEMENT OF ANY INSTALLATION MATERIALS, INCLUDING BUT NOT LIMITED TO, TILES, MARBLE, ETC. American Standard® will not be responsible for any other incidental or consequential damages attributable to a product defect or to the repair or exchange of a defective product, all of which are expressly excluded from this limited warranty. This limited warranty does not cover any liability for consequential or incidental damages, all of which are hereby expressly disclaimed, or the extension beyond the duration of this limited warranty of any implied limited warranties, including those of merchantability or fitness for an intended purpose. (Some states or provinces do not allow the exclusion or limitation of implied limited warranties, so this exclusion may not apply to you.)

This limited warranty gives you specific legal rights. You may have other statutory rights that vary from state to state or from province to province, in which case this limited warranty does not affect such statutory rights.

AS AMERICA, INC. LIMITED WARRANTY FOR CHAMPION® PRO AND CHAMPION®4 TOILETS

This toilet comes with a limited lifetime warranty on chinaware, a limited 10 year warranty on all mechanical parts of the toilet and a limited 1 year warranty on the toilet seat if included with product. If inspection of this AS America, Inc. ("American Standard®") plumbing product, inclusive of the chinaware and all mechanical parts, confirms that it is defective in materials or workmanship, American Standard® will repair or, at its option, exchange the product for the same or a similar model.

This limited warranty applies only to the original non-commercial purchaser and installation of the products. In the event of a limited warranty claim, proof of purchase will be required – **save sales receipt.**

For this warranty to become effective, the warranty registration process must be completed via the internet or telephone per the warranty registration instructions.

This limited warranty does not apply to commercial installations. The warranty for commercial installations is 1 year on chinaware and mechanical parts and 1 year on the toilet seat if included with product.

This warranty **does not apply** to local building code compliance. Since local building codes vary considerably, the purchaser of the product should check with a local building or plumbing contractor to ensure local code compliance before installation.

This warranty **will be void** if the product has been moved from its initial place of installation; if it has been subjected to faulty maintenance, abuse, misuse, accident or other damage; if it was not installed in accordance with American Standard®'s instructions; or if it has been modified in a manner inconsistent with the product as shipped by American Standard®.

WARNING: This warranty **DOES NOT COVER** any damages caused by the use of in-tank cleaners. These products can seriously corrode the fittings in the tank. This damage can cause leakage and property damage. **American Standard® will not be responsible or liable for any damage caused by the use of in-tank cleaners.**

American Standard®'s option to repair or exchange the product under this warranty does not cover any labor or other costs of removal or installation including any costs of any surrounding material such as tile or marble. **American Standard® is not responsible for any other incidental or consequential damages attributed to a product defect or to the repair or exchange of a defective product, all of which are expressly excluded from this warranty.** (Some states or provinces do not allow the exclusion or limitation of implied warranties, so this exclusion may not apply to you.)

This warranty gives you specific rights. You may have other statutory rights that may vary from state to state or province to province, in which case this warranty does not affect such statutory rights.